LM3704 Voltage Supervisor With Power-Fail Input, Low-Line Output and Manual Reset

1 Features

- Available Threshold Voltage of 3.08 V and 2.32 V
- No External Components Required
- Manual-Reset Input
- Available in Both Open-Drain and Push-Pull Configuration
- Reset Time-Out Delay of 200 ms
- Separate Power-Fail Comparator
- ±0.5% Reset Threshold Accuracy at Room Temperature
- ±2% Reset Threshold Accuracy Over Temperature
- 28-µA V_{CC} Supply Current

2 Applications

- Embedded Controllers and Processors
- Intelligent Instruments
- Automotive Systems
- Critical µP Power Monitoring

3 Description

The LM3704 is a feature-rich, easy-to-use voltage supervisor. It is offered in both push-pull and open-drain configuration with a tight 2% accuracy over temperature.

The LM3704 features include a manual reset, low-line output, and power-fail input detection. The power-fail input allows for a configurable second rail to be monitored helping detect upstream failures. The low-line output is used as a second interrupt line to indicate a fall in V_{CC} (1.02 × VRST).

Device Information[1]

PART NUMBER	PACKAGE	BODY SIZE (NOM)
LM3704	VSSOP (10)	3.00 mm × 3.00 mm

(1) For all available packages, see the orderable addendum at the end of the data sheet.

Typical Application

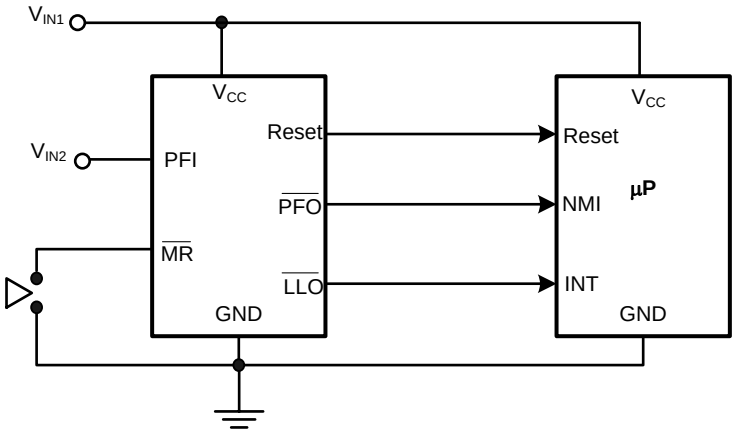

Copyright © 2016, Texas Instruments Incorporated

An IMPORTANT NOTICE at the end of this data sheet addresses availability, warranty, changes, use in safety-critical applications, intellectual property matters and other important disclaimers. PRODUCTION DATA.

Table of Contents

1 Features ... 1
2 Applications ... 1
3 Description ... 1
4 Revision History ... 2
5 Pin Configuration and Functions ... 3
6 Specifications ... 4
6.1 Absolute Maximum Ratings ... 4
6.2 ESD Ratings ... 4
6.3 Recommended Operating Conditions ... 4
6.4 Thermal Information ... 4
6.5 Electrical Characteristics ... 5
6.6 Typical Characteristics ... 8
7 Detailed Description ... 10
7.1 Overview ... 10
7.2 Functional Block Diagram ... 10
7.3 Feature Description ... 10
7.4 Device Functional Modes ... 11
8 Application and Implementation ... 12
8.1 Application Information ... 12
8.2 Typical Application ... 12
8.3 System Examples ... 14
9 Power Supply Recommendations ... 16
10 Layout ... 16
10.1 Layout Guidelines ... 16
10.2 Layout Example ... 16
11 Device and Documentation Support ... 17
11.1 Device Support ... 17
11.2 Community Resources ... 17
11.3 Trademarks ... 17
11.4 Electrostatic Discharge Caution ... 17
11.5 Glossary ... 17
12 Mechanical, Packaging, and Orderable Information ... 17

4 Revision History

NOTE: Page numbers for previous revisions may differ from page numbers in the current version.

Changes from Revision E (November 2012) to Revision F **Page**

- Added *ESD Ratings* table, *Feature Description* section, *Device Functional Modes*, *Application and Implementation* section, *Power Supply Recommendations* section, *Layout* section, *Device and Documentation Support* section, and *Mechanical, Packaging, and Orderable Information* section ... 1

Copyright © 2004–2016, Texas Instruments Incorporated

5 Pin Configuration and Functions

DGS Package
10-Pin VSSOP
Top View

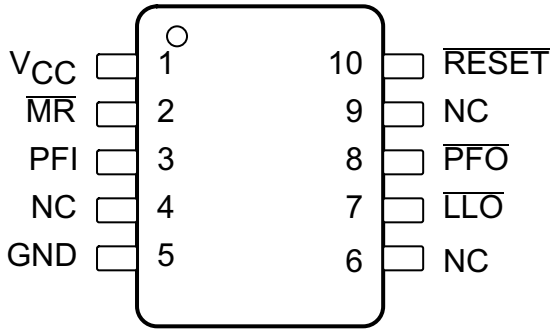

Pin Functions

PIN		I/O	DESCRIPTION
NO.	NAME		
1	V_{CC}	I	Power supply input.
2	$\overline{MR}$	I	Manual-reset input. When $\overline{MR}$ is less than V_{MRT} (manual reset threshold) $\overline{RESET}$/RESET is engaged.
3	PFI	I	Power-fail comparator input. When PFI is less than V_{PFT} (power-fail reset threshold), the $\overline{PFO}$ goes low. Otherwise, $\overline{PFO}$ remains high.
4	NC	—	No connection.
5	GND	—	Ground reference for all signals.
6	NC	—	No connection.
7	$\overline{LLO}$	O	Low-line logic output. Early power-fail warning output. Low when V_{CC} falls below V_{LLOT} (low-line output threshold). This output can be used to generate an NMI (non-maskable interrupt) to provide an early warning of imminent power failure.
8	$\overline{PFO}$	O	Power-fail logic output. When PFI is below V_{PFT}, $\overline{PFO}$ goes low; otherwise, $\overline{PFO}$ remains high.
9	NC	—	No connection. Test input used at factory only. Leave floating.
10	$\overline{RESET}$	O	Reset logic output. Pulses low for t_{RP} (reset time-out period) when triggered, and stays low whenever V_{CC} is below the reset threshold or when $\overline{MR}$ is below V_{MRT}. It remains low for t_{RP} after either V_{CC} rises above the reset threshold, or after $\overline{MR}$ input rises above V_{MRT}.

Copyright © 2004–2016, Texas Instruments Incorporated

6 Specifications

6.1 Absolute Maximum Ratings

over operating free-air temperature range (unless otherwise noted)(1)

	MIN	MAX	UNIT
Supply voltage, V_{CC}	–0.3	6	V
All other inputs	–0.3	V_{CC} + 0.3	V
Power dissipation	See(2)		
Storage temperature, T_{stg}	–65	150	°C

(1) Stresses beyond those listed under *Absolute Maximum Ratings* may cause permanent damage to the device. These are stress ratings only, which do not imply functional operation of the device at these or any other conditions beyond those indicated under *Recommended Operating Conditions*. Exposure to absolute-maximum-rated conditions for extended periods may affect device reliability.

(2) The maximum allowable power dissipation is a function of the maximum junction temperature, T_J(MAX), the junction-to-ambient thermal resistance, θ_{J-A}, and the ambient temperature, T_A. The maximum allowable power dissipation at any ambient temperature is calculated using:

$$P(MAX) = \frac{T_J(MAX) - T_A}{\theta_{J-A}}$$

Where the value of θ_{J-A} for the 10-pin VSSOP package is 195°C/W in a typical printed-circuit board (PCB) mounting and the DSBGA package is 220°C/W.

6.2 ESD Ratings

			VALUE	UNIT
$V_{(ESD)}$	Electrostatic discharge	Human-body model (HBM), per ANSI/ESDA/JEDEC JS-001(1)	±1500	V
		Charged-device model (CDM), per JEDEC specification JESD22-C101(2)	±150	

(1) JEDEC document JEP155 states that 500-V HBM allows safe manufacturing with a standard ESD control process.
(2) JEDEC document JEP157 states that 250-V CDM allows safe manufacturing with a standard ESD control process.

6.3 Recommended Operating Conditions

over operating free-air temperature range (unless otherwise noted)

		MIN	MAX	UNIT
T_A	Free-air temperature	–40	85	°C

6.4 Thermal Information

THERMAL METRIC(1)		LM3704 DGS (VSSOP) 10 PINS	UNIT
$R_{\theta JA}$	Junction-to-ambient thermal resistance	163.7	°C/W
$R_{\theta JC(top)}$	Junction-to-case (top) thermal resistance	58.3	°C/W
$R_{\theta JB}$	Junction-to-board thermal resistance	83.5	°C/W
ψ_{JT}	Junction-to-top characterization parameter	6	°C/W
ψ_{JB}	Junction-to-board characterization parameter	82.2	°C/W
$R_{\theta JC(bot)}$	Junction-to-case (bottom) thermal resistance	—	°C/W

(1) For more information about traditional and new thermal metrics, see the *Semiconductor and IC Package Thermal Metrics* application report, SPRA953.

Copyright © 2004–2016, Texas Instruments Incorporated

6.5 Electrical Characteristics

at T_J = 25°C and V_{CC} = 2.2 V to 5.5 V (unless otherwise noted)

PARAMETER		TEST CONDITIONS		MIN	TYP	MAX	UNIT
POWER SUPPLY							
V_{CC}	Operating voltage	LM3704, T_J = –40°C to 85°C		1		5.5	V
I_{CC}	V_{CC} supply current	All inputs = V_{CC}, all outputs floating	T_J = 25°C		28		µA
			T_J = –40°C to 85°C			50	
RESET THRESHOLD							
V_{RST}	Reset threshold	V_{CC} falling	T_J = 25°C	–0.5%	V_{RST}	0.5%	
			T_J = –40°C to 85°C	–2%		2%	
			T_J = 0°C to 70°C	–1.5%		1.5%	
V_{RSTH}	Reset threshold hysteresis				0.0032 × V_{RST}		mV
t_{RP}	Reset time-out period	Reset time-out period = C	T_J = 25°C		200		ms
			T_J = –40°C to 85°C	140		280	
t_{RD}	V_{CC} to reset delay	V_{CC} falling at 1 mV/µs			20		µs
$\overline{\text{RESET}}$							
V_{OL}	$\overline{\text{RESET}}$	V_{CC} > 1.0 V, I_{SINK} = 50 µA, T_J = –40°C to 85°C				0.3	V
		V_{CC} > 1.2 V, I_{SINK} = 100 µA, T_J = –40°C to 85°C				0.3	
		V_{CC} > 2.25 V, I_{SINK} = 900 µA, T_J = –40°C to 85°C				0.3	
		V_{CC} > 2.7 V, I_{SINK} = 1.2 mA, T_J = –40°C to 85°C				0.3	
		V_{CC} > 4.5 V, I_{SINK} = 3.2 mA, T_J = –40°C to 85°C				0.4	
V_{OH}	$\overline{\text{RESET}}$	V_{CC} > 2.25 V, I_{SOURCE} = 300 µA, T_J = –40°C to 85°C		0.8 × V_{CC}			V
		V_{CC} > 2.7 V, I_{SOURCE} = 500 µA, T_J = –40°C to 85°C		0.8 × V_{CC}			
		V_{CC} > 4.5 V, I_{SOURCE} = 800 µA, T_J = –40°C to 85°C		V_{CC} – 1.5			
PFI/$\overline{\text{MR}}$							
V_{PFT}	PFI input threshold	T_J = 25°C			1.225		V
		T_J = –40°C to 85°C		1.2		1.25	
V_{MRT}	$\overline{\text{MR}}$ Input threshold	T_J = –40°C to 85°C	$\overline{\text{MR}}$, low			0.8	V
			$\overline{\text{MR}}$, high	2			
V_{PFTH}/ V_{MRTH}	PFI/$\overline{\text{MR}}$ threshold hysteresis	PFI/$\overline{\text{MR}}$ falling, V_{CC} = $V_{RST\ MAX}$ to 5.5 V			0.0032 × V_{RST}		mV
I_{PFI}	Input current (PFI only)	T_J = –40°C to 85°C		–75		75	nA
R_{MR}	$\overline{\text{MR}}$ pullup resistance	T_J = 25°C			56		kΩ
		T_J = –40°C to 85°C		35		75	
t_{MD}	$\overline{\text{MR}}$ to reset delay				12		µS
t_{MR}	$\overline{\text{MR}}$ pulse width	T_J = –40°C to 85°C		25			µS
$\overline{\text{PFO}}$, $\overline{\text{LLO}}$							
V_{OL}	$\overline{\text{PFO}}$, $\overline{\text{LLO}}$ output low voltage	V_{CC} > 2.25 V, I_{SINK} = 900 µA, T_J = –40°C to 85°C				0.3	V
		V_{CC} > 2.7 V, I_{SINK} = 1.2 mA, T_J = –40°C to 85°C				0.3	
		V_{CC} > 4.5 V, I_{SINK} = 3.2 mA, T_J = –40°C to 85°C				0.4	

Copyright © 2004–2016, Texas Instruments Incorporated

Electrical Characteristics (continued)

at T_J = 25°C and V_{CC} = 2.2 V to 5.5 V (unless otherwise noted)

PARAMETER		TEST CONDITIONS		MIN	TYP	MAX	UNIT
V_{OH}	$\overline{PFO}$, $\overline{LLO}$ output high voltage	V_{CC} > 2.25 V, I_{SOURCE} = 300 µA, T_J = –40°C to 85°C		0.8 V_{CC}			V
		V_{CC} > 2.7 V, I_{SOURCE} = 500 µA, T_J = –40°C to 85°C		0.8 V_{CC}			
		V_{CC} > 4.5 V, I_{SOURCE} = 800 µA, T_J = –40°C to 85°C		V_{CC} – 1.5			
$\overline{LLO}$ OUTPUT							
V_{LLOT}	$\overline{LLO}$ output threshold	$V_{\overline{LLO}}$ – V_{RST}, V_{CC} falling	T_J = 25°C		1.02 × V_{RST}		V
			T_J = –40°C to 85°C	1.01 × V_{RST}		1.03 × V_{RST}	
V_{LLOTH}	Low-line comparator hysteresis				0.0032 × V_{RST}		mV
t_{CD}	Low-line comparator delay	V_{CC} falling at 1 mV/µs			20		µs

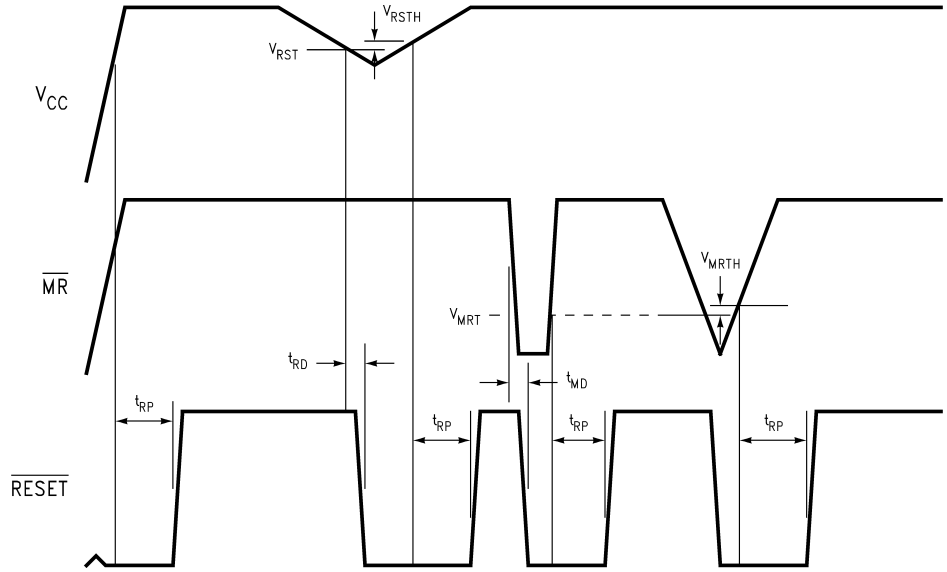

Figure 1. LM3704 Reset Time With $\overline{MR}$

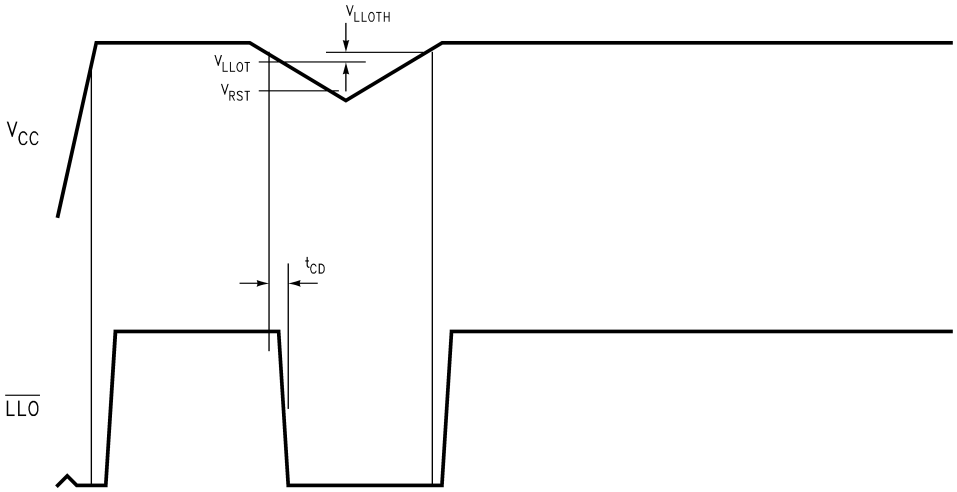

Figure 2. $\overline{LLO}$ Output

Copyright © 2004–2016, Texas Instruments Incorporated

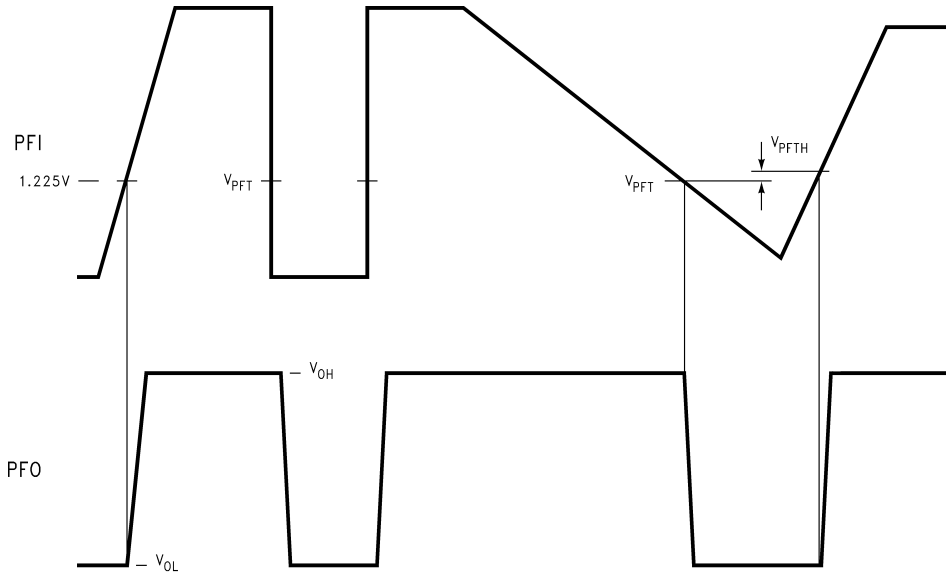

Figure 3. PFI Comparator Timing Diagram

6.6 Typical Characteristics

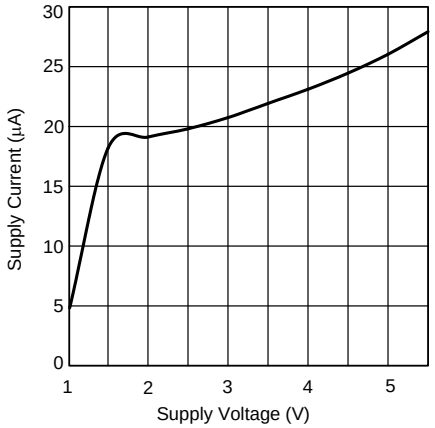

Figure 4. Supply Current vs Supply Voltage

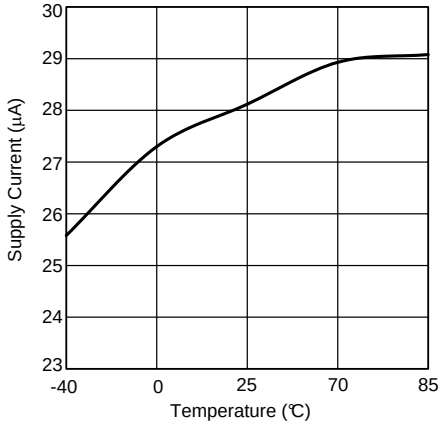

Figure 5. 3.3-V Supply Current vs Temperature

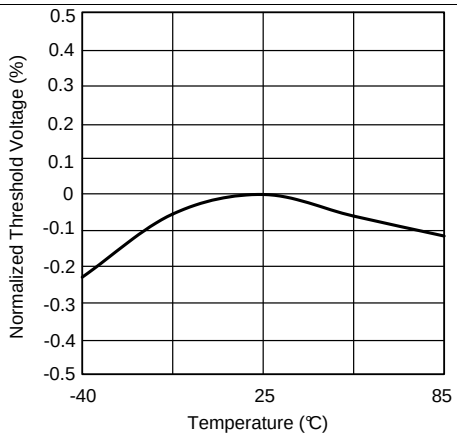

Figure 6. Normalized Reset Threshold Voltage vs Temperature

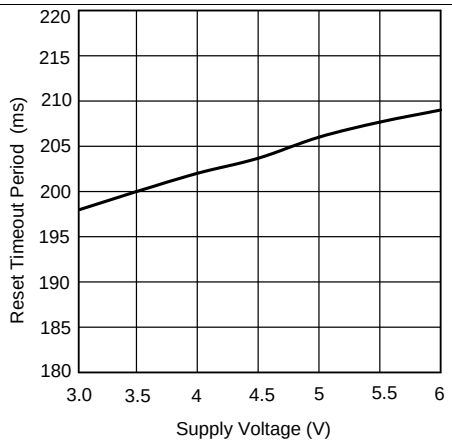

Figure 7. Reset Timeout Period vs V_{CC}

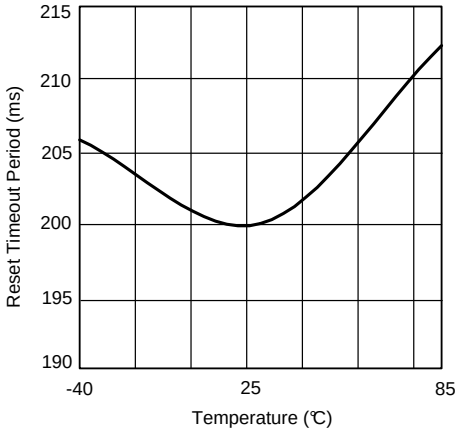

Figure 8. Reset Timeout Period vs Temperature

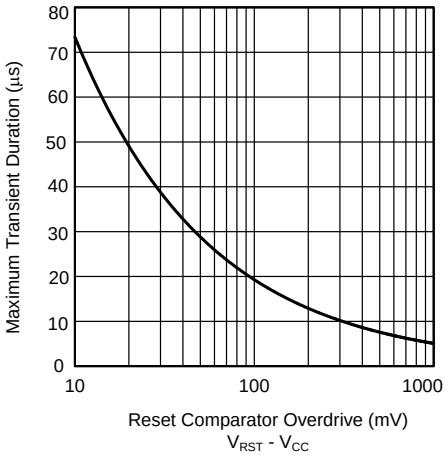

V_{CC} = 3.3 V

Figure 9. Maximum Transient Duration vs Reset Comparator Overdrive

Copyright © 2004–2016, Texas Instruments Incorporated

Typical Characteristics (continued)

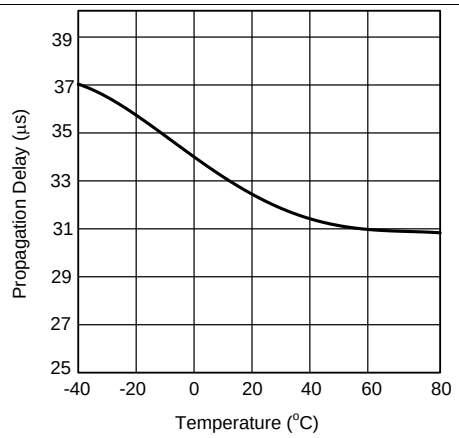

Figure 10. Low-Line Comparator Propagation Delay vs Temperature

7 Detailed Description

7.1 Overview

The LM3704 microprocessor supervisory circuit monitors power supplies and battery-controlled functions in systems and does not require external components. There is a standard reset threshold voltage of 3.08 V while other custom reset threshold voltages are available to provide maximum monitoring flexibility. The $\overline{\text{RESET}}$ pin pulses low for the reset time-out period when triggered and stays low whenever V_{CC} is below the reset threshold or when $\overline{\text{MR}}$ is below V_{MRT}. Once the V_{CC} rises above the reset threshold, or after $\overline{\text{MR}}$ input rises above V_{MRT}, the $\overline{\text{RESET}}$ pin remains low for the reset timeout period before coming up.

7.2 Functional Block Diagram

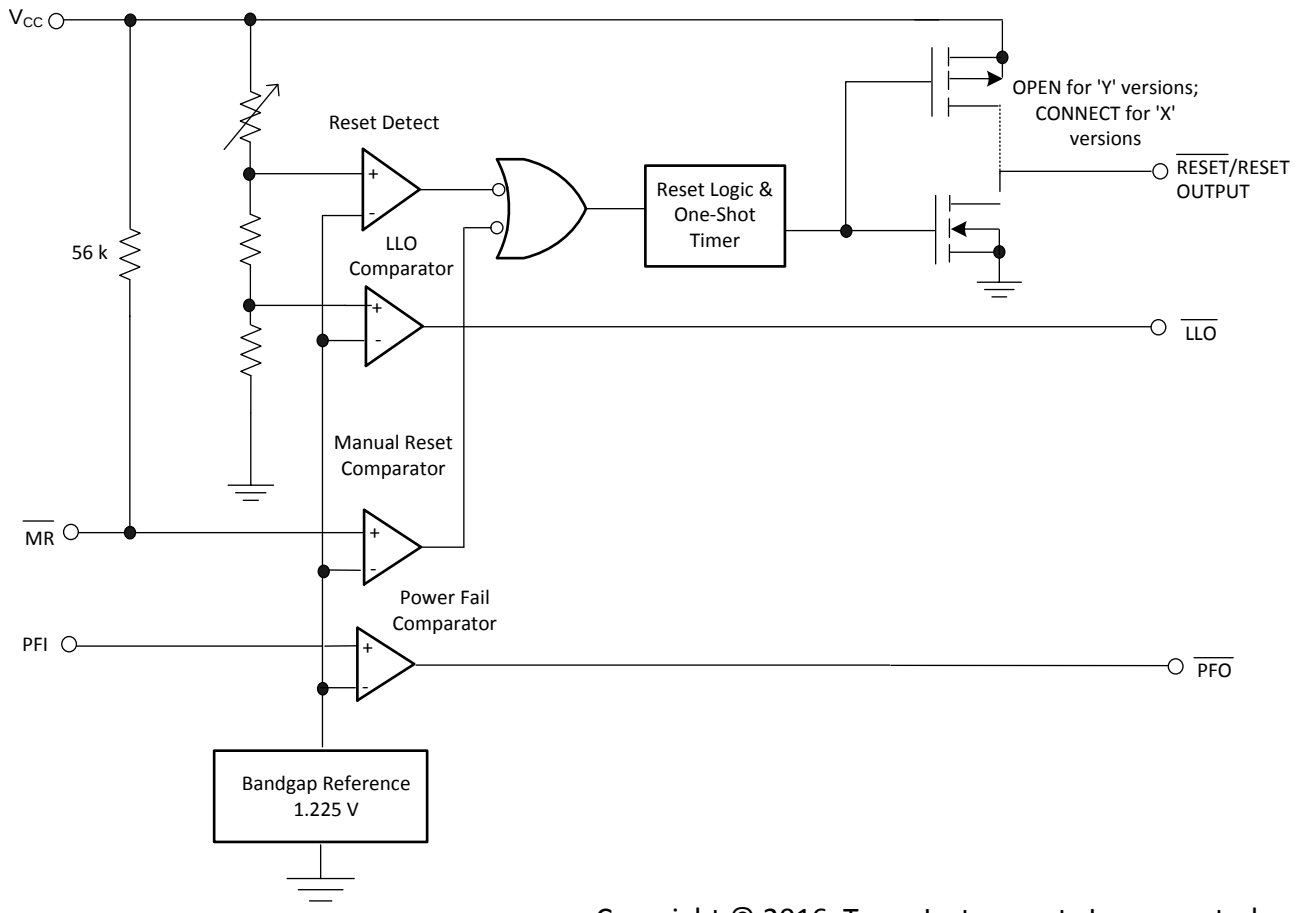

Copyright © 2016, Texas Instruments Incorporated

7.3 Feature Description

7.3.1 Reset Output

The reset input of a µP initializes the device into a known state. The LM3704 microprocessor supervisory circuit asserts a forced reset output to prevent code execution errors during power-up, power-down, and brownout conditions.

$\overline{\text{RESET}}$ is ensured valid for V_{CC} > 1 V. Once V_{CC} exceeds the reset threshold, an internal timer maintains the output for the reset time-out period. After this interval, reset goes high. The LM3704 offers an active-low $\overline{\text{RESET}}$.

Any time V_{CC} drops below the reset threshold (such as during a brownout), the reset activates. When V_{CC} again rises above the reset threshold, the internal timer starts. Reset holds until V_{CC} exceeds the reset threshold for longer than the reset time-out period. After this time, reset releases.

Copyright © 2004–2016, Texas Instruments Incorporated

Feature Description (continued)

The Manual Reset input ($\overline{MR}$) initiates a forced reset also. See *Manual Reset Input ($\overline{MR}$)*.

7.3.2 Reset Threshold

The LM3704 is available with a reset voltage of 3.08 V. Other reset thresholds in the 2.20-V to 5-V range, in steps of 10 mV, are available; contact Texas Instruments for details.

7.3.3 Manual Reset Input ($\overline{MR}$)

Many µP-based products require a manual reset capability, allowing the operator to initiate a reset. The $\overline{MR}$ input is fully debounced and provides an internal 56-kΩ pullup. When the $\overline{MR}$ input is pulled below V_{MRT} (1.225 V) for more than 25 µs, reset is asserted after a typical delay of 12 µs. Reset remains active as long as $\overline{MR}$ is held low, and releases after the reset time-out period expires after $\overline{MR}$ rises above V_{MRT}. Use $\overline{MR}$ with digital logic to assert or to daisy chain supervisory circuits. It may be used as another low-line comparator by adding a buffer.

7.3.4 Power-Fail Comparator (PFI/$\overline{PFO}$)

The PFI is compared to a 1.225-V internal reference, V_{PFT}. If PFI is less than V_{PFT}, the Power-Fail Output ($\overline{PFO}$) drops low. The power-fail comparator signals a falling power supply, and is driven typically by an external voltage divider that senses either the unregulated supply or another system supply voltage. The voltage divider generally is chosen so the voltage at PFI drops below V_{PFT} several milliseconds before the main supply voltage drops below the reset threshold, providing advanced warning of a brownout.

The voltage threshold is set by R_1 and R_2 and is calculated with Equation 1.

$$V_{PFT} = \left(\frac{R1 + R2}{R2}\right) \times 1.225V \quad (1)$$

NOTE

This comparator is completely separate from the rest of the circuitry, and may be employed for other functions as needed.

7.3.5 Low-Line Output ($\overline{LLO}$)

The low-line output comparator is typically used to provide a non-maskable interrupt to a µP when V_{CC} begins falling. $\overline{LLO}$ monitors V_{CC} and goes low when V_{CC} falls below V_{LLOT} (typically 1.02 × V_{RST}) with hysteresis of 0.0032 × V_{RST}.

7.4 Device Functional Modes

7.4.1 $\overline{RESET}$ Output Low

Anytime V_{CC} drops below the reset threshold, the $\overline{RESET}$ output drops low and remains low until V_{CC} rises above the threshold and the reset time-out period has expired. The manual reset input ($\overline{MR}$) also causes the reset to be active. If $\overline{MR}$ input is pulled below V_{MRT} for more than 25 µs, the $\overline{RESET}$ output drops low and remains low until $\overline{MR}$ rises above the manual reset threshold (V_{MRT}) and the reset time-out period has expired.

7.4.2 $\overline{RESET}$ Output High

The $\overline{RESET}$ output remains high as long as V_{CC} is above the reset threshold and $\overline{MR}$ is above the manual reset threshold (V_{MRT}).

Copyright © 2004–2016, Texas Instruments Incorporated

8 Application and Implementation

NOTE

Information in the following applications sections is not part of the TI component specification, and TI does not warrant its accuracy or completeness. TI's customers are responsible for determining suitability of components for their purposes. Customers should validate and test their design implementation to confirm system functionality.

8.1 Application Information

The LM3704 is a microprocessor supervisory circuit that provides the maximum flexibility for monitoring power supplies and battery-controlled functions. The reset threshold is typically 3.08 V but can be customized for voltages between 2.2 V and 5 V in 10-mV increments by contacting Texas Instruments. The power-fail input, which is a 1.225-V threshold detector for power-fail warning, can be adjusted using a resistor divider as shown in Figure 11. This section shows various application circuits to provide different monitoring solutions.

8.2 Typical Application

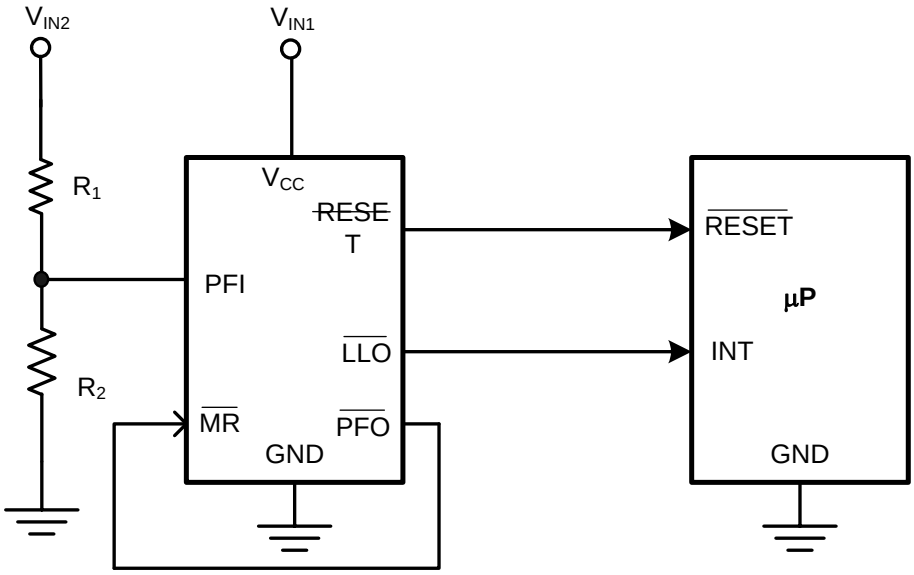

$$\text{Power-Fail Reset Threshold, } V_{PFT} = 1.225\ \left(\frac{R_1}{R_2} + 1\right)$$

Copyright © 2016, Texas Instruments Incorporated

Figure 11. Monitoring Two Critical Supplies

8.2.1 Design Requirements

The component count is minimal; employing two resistors as part of a voltage-divider circuit is all that is needed for the typical application of monitoring two critical supplies shown in Figure 11.

8.2.2 Detailed Design Procedure

The voltage-divider circuit that connects to the power-fail reset pin is chosen such that the reset threshold at the device is 1.225 V as shown in Figure 11.

Copyright © 2004–2016, Texas Instruments Incorporated

Typical Application (continued)

8.2.3 Application Curves

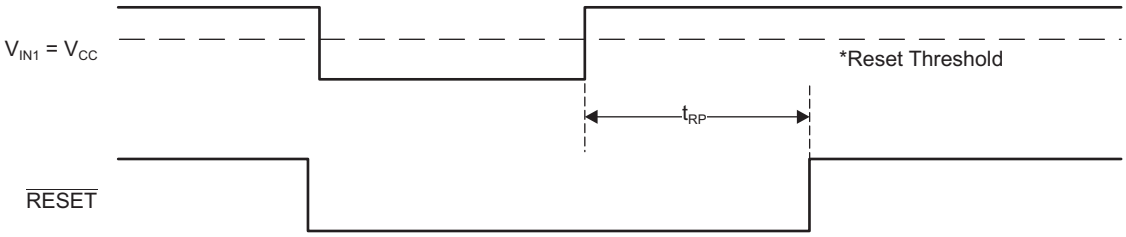

Standard reset threshold is 3.08 V. Custom reset voltages are available between 2.2 V and 5 V in 10-mV increments by contacting Texas Instruments.

Figure 12. Monitoring V_{IN1} for Reset Condition

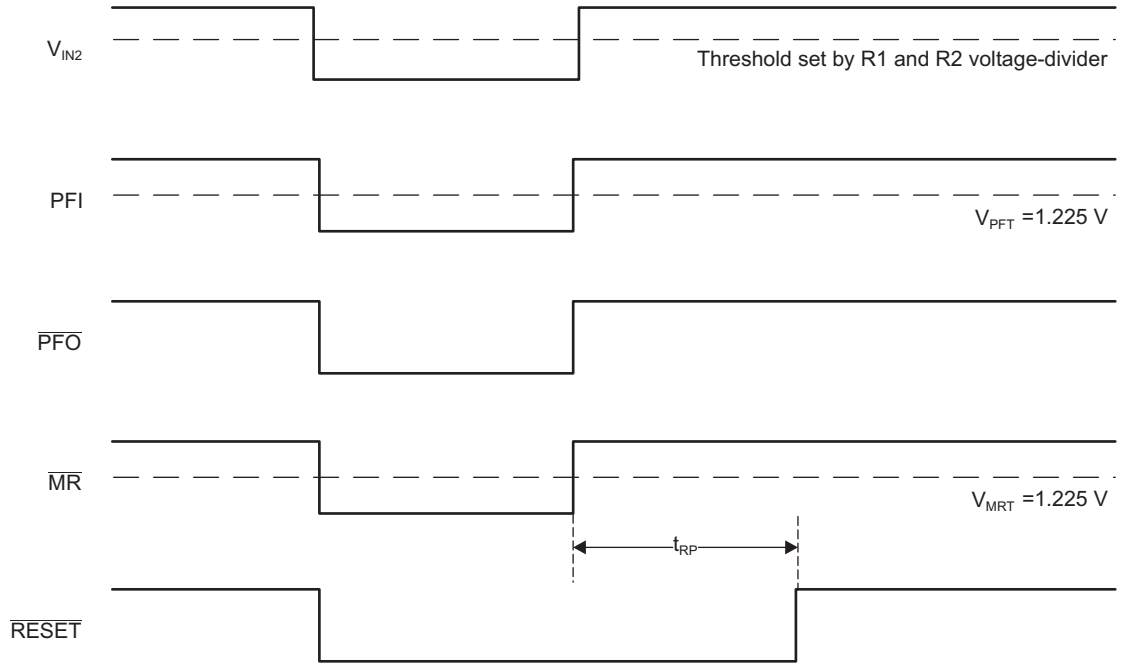

See *Electrical Characteristics* for high and low levels of this specific application.

Figure 13. Monitoring V_{IN2} for Reset Condition

8.3 System Examples

The LM3704 voltage supervisor has various features such as power-fail input detection, low-line output, and manual reset while requiring few to no additional components making it versatile and easy-to-use. See Figure 14 through Figure 18 for a variety of circuit applications.

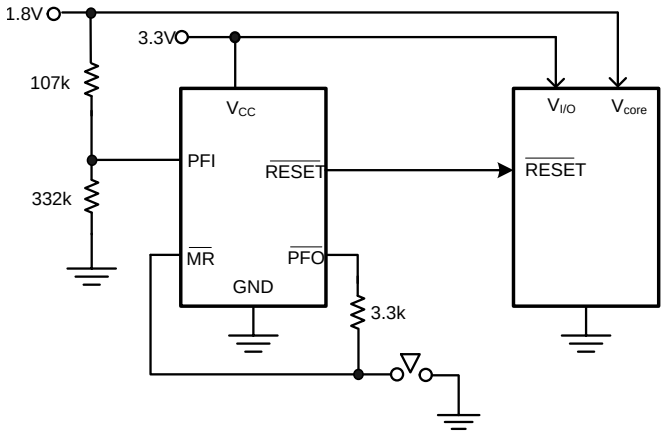

Copyright © 2016, Texas Instruments Incorporated

Figure 14. Monitoring Two Supplies Plus Manual Reset

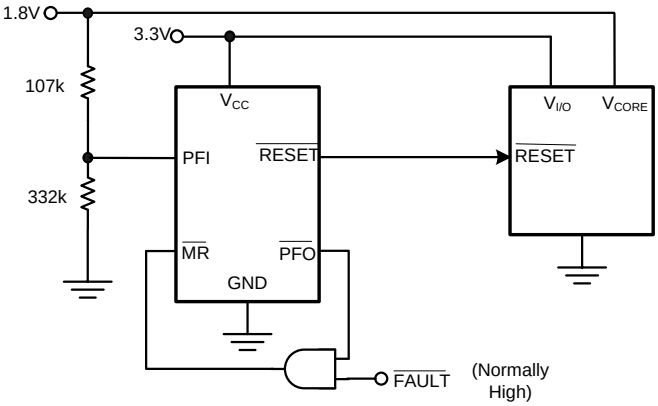

Copyright © 2016, Texas Instruments Incorporated

Figure 15. Monitoring Dual Supplies Plus External Fault Input

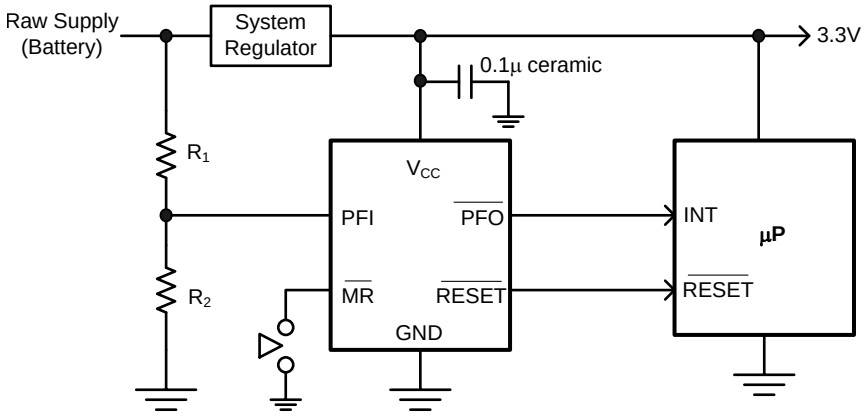

$$\text{Power-Fail Reset Threshold, } V_{PFT} = 1.225 \cdot \left(\frac{R_1}{R_2} + 1\right)$$

Copyright © 2016, Texas Instruments Incorporated

$\overline{MR}$ input with its 1.225-V nominal threshold, may monitor an additional supply voltage. An internal 56-kΩ pullup resistor is included on this input.

Figure 16. Microprocessor Supervisor With Early Warning Detector

Copyright © 2004–2016, Texas Instruments Incorporated

System Examples (continued)

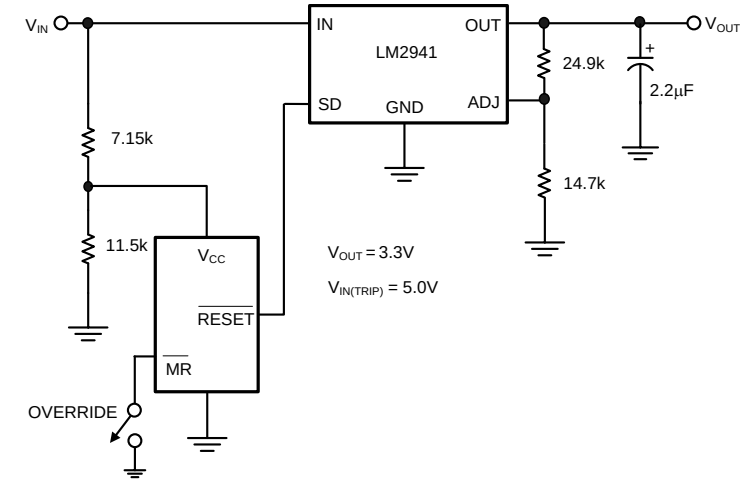

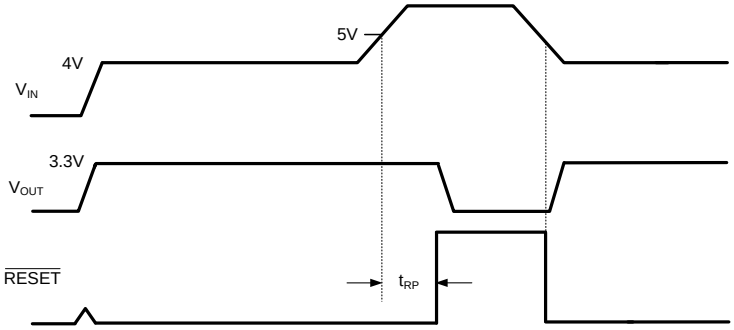

Copyright © 2016, Texas Instruments Incorporated

Figure 17. Regulator/Switch With Long-Term Overvoltage Lockout Prevents Overdissipation in Linear Regulator

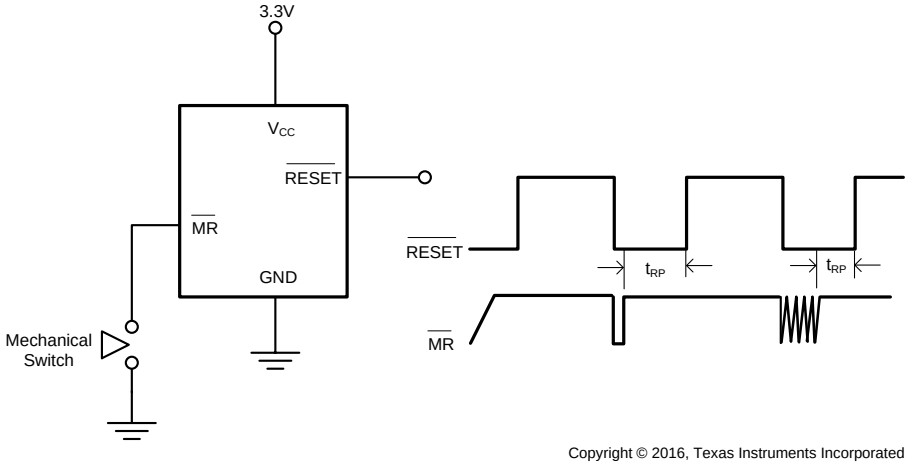

Copyright © 2016, Texas Instruments Incorporated

Figure 18. Switch Debouncer

9 Power Supply Recommendations

The input power supply to the V_{CC} pin of the LM3704 must be kept at a voltage lower than the recommended voltage of 5.5 V. All other input pins must be kept at a voltage lower than V_{CC} + 0.3 V. Do not exceed absolute maximum ratings found in *Absolute Maximum Ratings* in any circumstance.

10 Layout

10.1 Layout Guidelines

Keep traces short between IC and external components.

10.2 Layout Example

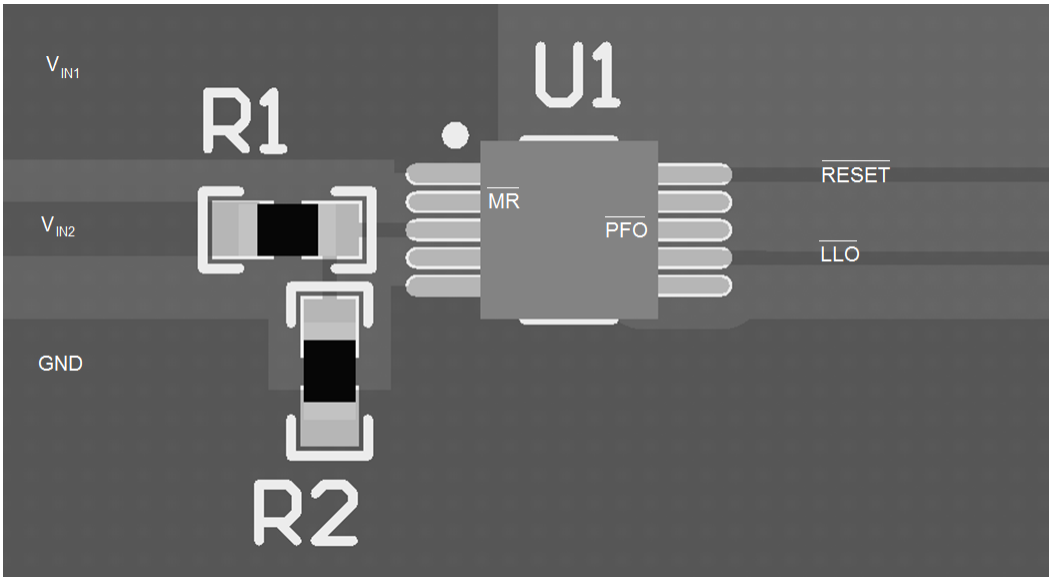

Figure 19. Layout Example for Application Circuit

Copyright © 2004–2016, Texas Instruments Incorporated

11 Device and Documentation Support

11.1 Device Support

11.1.1 Device Nomenclature

Table 1. Table of Functions

PART NUMBER	OUTPUT (X = TOTEM-POLE) (Y = OPEN-DRAIN)	RESET TIMEOUT PERIOD
LM3704	X, Y	200 ms

11.2 Community Resources

The following links connect to TI community resources. Linked contents are provided "AS IS" by the respective contributors. They do not constitute TI specifications and do not necessarily reflect TI's views; see TI's Terms of Use.

TI E2E™ Online Community ***TI's Engineer-to-Engineer (E2E) Community.*** Created to foster collaboration among engineers. At e2e.ti.com, you can ask questions, share knowledge, explore ideas and help solve problems with fellow engineers.

Design Support ***TI's Design Support*** Quickly find helpful E2E forums along with design support tools and contact information for technical support.

11.3 Trademarks

E2E is a trademark of Texas Instruments.
All other trademarks are the property of their respective owners.

11.4 Electrostatic Discharge Caution



These devices have limited built-in ESD protection. The leads should be shorted together or the device placed in conductive foam during storage or handling to prevent electrostatic damage to the MOS gates.

11.5 Glossary

SLYZ022 — *TI Glossary*.

This glossary lists and explains terms, acronyms, and definitions.

12 Mechanical, Packaging, and Orderable Information

The following pages include mechanical, packaging, and orderable information. This information is the most current data available for the designated devices. This data is subject to change without notice and revision of this document. For browser-based versions of this data sheet, refer to the left-hand navigation.

Copyright © 2004–2016, Texas Instruments Incorporated

PACKAGING INFORMATION

Orderable Device	Status (1)	Package Type	Package Drawing	Pins	Package Qty	Eco Plan (2)	Lead/Ball Finish (6)	MSL Peak Temp (3)	Op Temp (°C)	Device Marking (4/5)	Samples
LM3704XCMM-308/NOPB	ACTIVE	VSSOP	DGS	10	1000	Green (RoHS & no Sb/Br)	SN	Level-1-260C-UNLIM	-40 to 85	R35B	Samples
LM3704YCMM-232/NOPB	ACTIVE	VSSOP	DGS	10	1000	Green (RoHS & no Sb/Br)	SN	Level-1-260C-UNLIM		R76B	Samples
LM3704YCMM-308/NOPB	ACTIVE	VSSOP	DGS	10	1000	Green (RoHS & no Sb/Br)	SN	Level-1-260C-UNLIM	-40 to 85	R48B	Samples
LM3704YCMMX-308/NOPB	ACTIVE	VSSOP	DGS	10	3500	Green (RoHS & no Sb/Br)	SN	Level-1-260C-UNLIM	-40 to 85	R48B	Samples

(1) The marketing status values are defined as follows:
ACTIVE: Product device recommended for new designs.
LIFEBUY: TI has announced that the device will be discontinued, and a lifetime-buy period is in effect.
NRND: Not recommended for new designs. Device is in production to support existing customers, but TI does not recommend using this part in a new design.
PREVIEW: Device has been announced but is not in production. Samples may or may not be available.
OBSOLETE: TI has discontinued the production of the device.

(2) **RoHS:** TI defines "RoHS" to mean semiconductor products that are compliant with the current EU RoHS requirements for all 10 RoHS substances, including the requirement that RoHS substance do not exceed 0.1% by weight in homogeneous materials. Where designed to be soldered at high temperatures, "RoHS" products are suitable for use in specified lead-free processes. TI may reference these types of products as "Pb-Free".
RoHS Exempt: TI defines "RoHS Exempt" to mean products that contain lead but are compliant with EU RoHS pursuant to a specific EU RoHS exemption.
Green: TI defines "Green" to mean the content of Chlorine (Cl) and Bromine (Br) based flame retardants meet JS709B low halogen requirements of <=1000ppm threshold. Antimony trioxide based flame retardants must also meet the <=1000ppm threshold requirement.

(3) MSL, Peak Temp. - The Moisture Sensitivity Level rating according to the JEDEC industry standard classifications, and peak solder temperature.

(4) There may be additional marking, which relates to the logo, the lot trace code information, or the environmental category on the device.

(5) Multiple Device Markings will be inside parentheses. Only one Device Marking contained in parentheses and separated by a "~" will appear on a device. If a line is indented then it is a continuation of the previous line and the two combined represent the entire Device Marking for that device.

(6) Lead/Ball Finish - Orderable Devices may have multiple material finish options. Finish options are separated by a vertical ruled line. Lead/Ball Finish values may wrap to two lines if the finish value exceeds the maximum column width.

Important Information and Disclaimer: The information provided on this page represents TI's knowledge and belief as of the date that it is provided. TI bases its knowledge and belief on information provided by third parties, and makes no representation or warranty as to the accuracy of such information. Efforts are underway to better integrate information from third parties. TI has taken and

continues to take reasonable steps to provide representative and accurate information but may not have conducted destructive testing or chemical analysis on incoming materials and chemicals.
TI and TI suppliers consider certain information to be proprietary, and thus CAS numbers and other limited information may not be available for release.

In no event shall TI's liability arising out of such information exceed the total purchase price of the TI part(s) at issue in this document sold by TI to Customer on an annual basis.

TAPE AND REEL INFORMATION

REEL DIMENSIONS

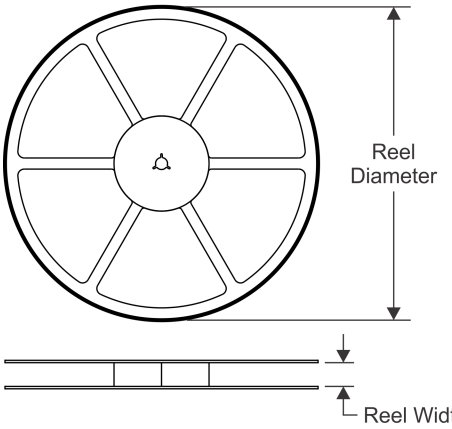

TAPE DIMENSIONS

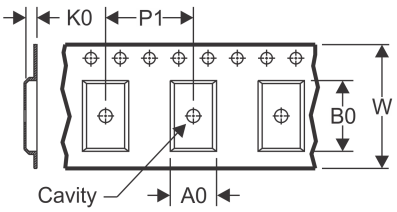

A0	Dimension designed to accommodate the component width
B0	Dimension designed to accommodate the component length
K0	Dimension designed to accommodate the component thickness
W	Overall width of the carrier tape
P1	Pitch between successive cavity centers

QUADRANT ASSIGNMENTS FOR PIN 1 ORIENTATION IN TAPE

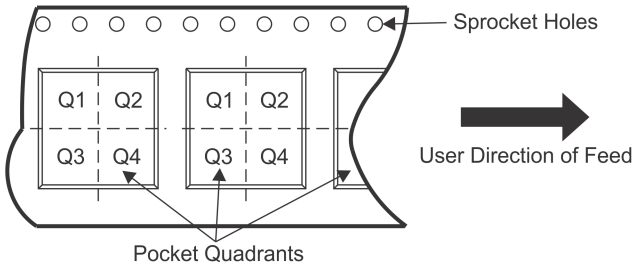

*All dimensions are nominal

Device	Package Type	Package Drawing	Pins	SPQ	Reel Diameter (mm)	Reel Width W1 (mm)	A0 (mm)	B0 (mm)	K0 (mm)	P1 (mm)	W (mm)	Pin1 Quadrant
LM3704XCMM-308/NOPB	VSSOP	DGS	10	1000	178.0	12.4	5.3	3.4	1.4	8.0	12.0	Q1
LM3704YCMM-232/NOPB	VSSOP	DGS	10	1000	178.0	12.4	5.3	3.4	1.4	8.0	12.0	Q1
LM3704YCMM-308/NOPB	VSSOP	DGS	10	1000	178.0	12.4	5.3	3.4	1.4	8.0	12.0	Q1
LM3704YCMMX-308/NOPB	VSSOP	DGS	10	3500	330.0	12.4	5.3	3.4	1.4	8.0	12.0	Q1

TAPE AND REEL BOX DIMENSIONS

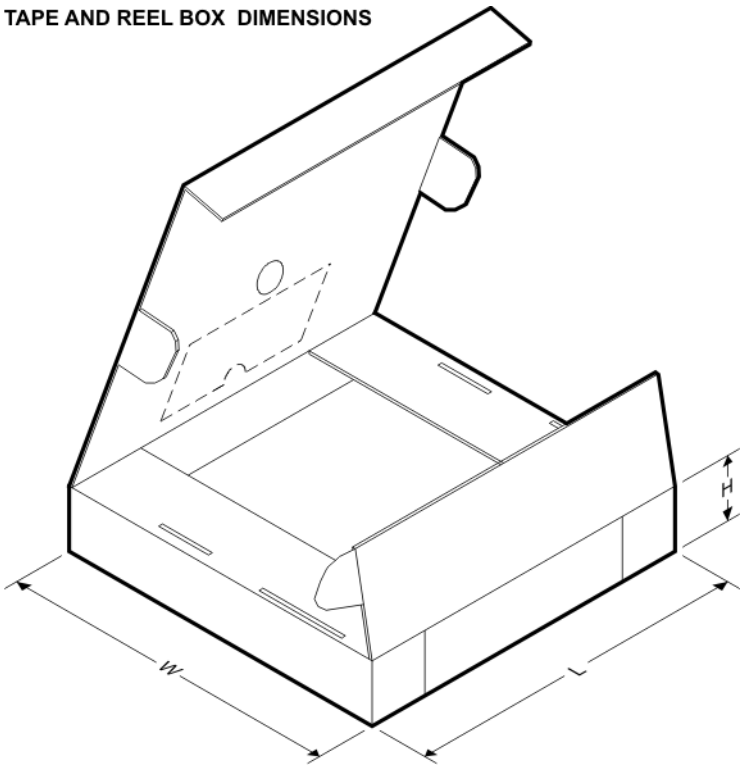

*All dimensions are nominal

Device	Package Type	Package Drawing	Pins	SPQ	Length (mm)	Width (mm)	Height (mm)
LM3704XCMM-308/NOPB	VSSOP	DGS	10	1000	210.0	185.0	35.0
LM3704YCMM-232/NOPB	VSSOP	DGS	10	1000	210.0	185.0	35.0
LM3704YCMM-308/NOPB	VSSOP	DGS	10	1000	210.0	185.0	35.0
LM3704YCMMX-308/NOPB	VSSOP	DGS	10	3500	367.0	367.0	35.0

PACKAGE OUTLINE

DGS0010A

VSSOP - 1.1 mm max height

SMALL OUTLINE PACKAGE

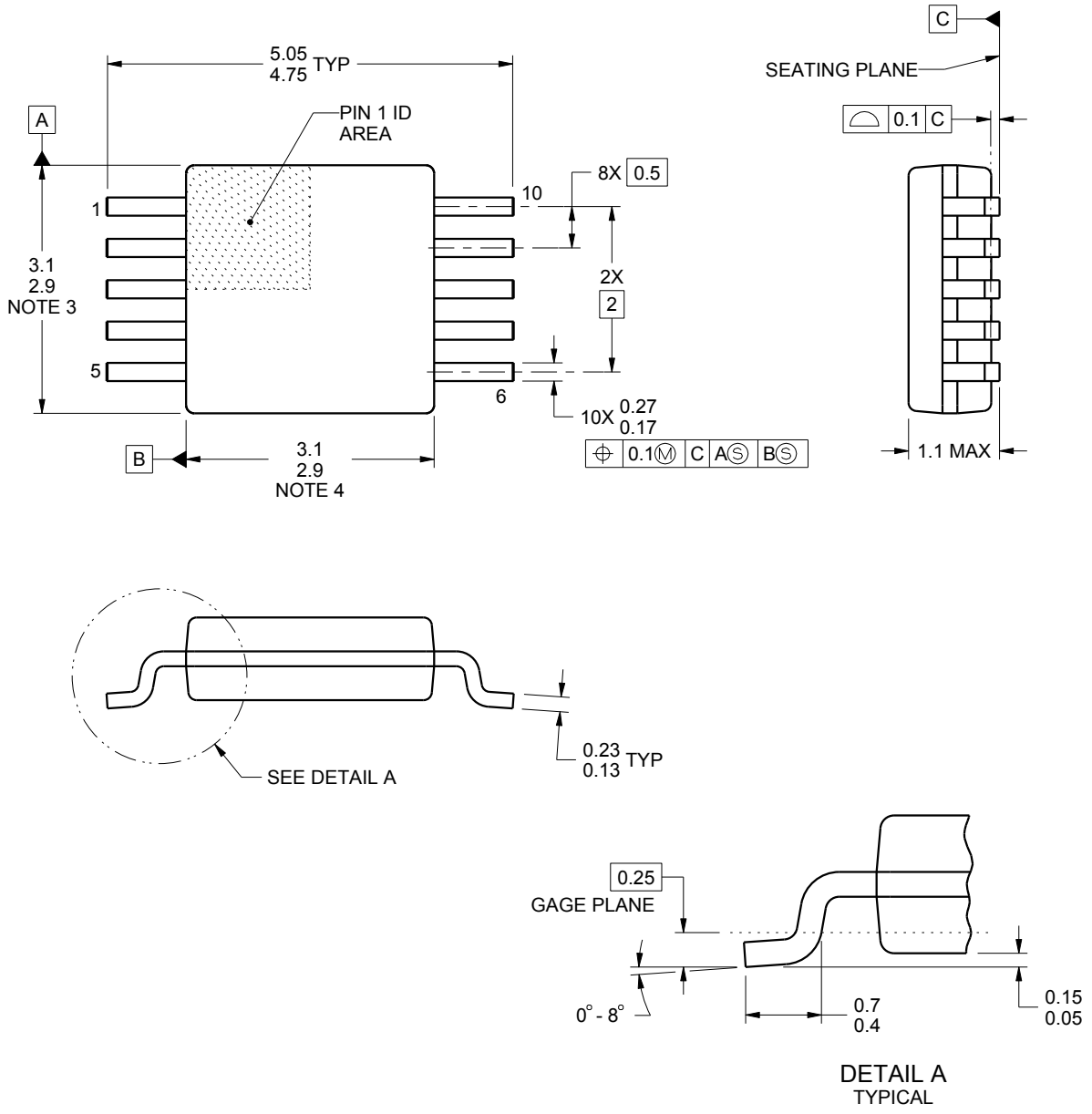

NOTES:

1. All linear dimensions are in millimeters. Any dimensions in parenthesis are for reference only. Dimensioning and tolerancing per ASME Y14.5M.
2. This drawing is subject to change without notice.
3. This dimension does not include mold flash, protrusions, or gate burrs. Mold flash, protrusions, or gate burrs shall not exceed 0.15 mm per side.
4. This dimension does not include interlead flash. Interlead flash shall not exceed 0.25 mm per side.
5. Reference JEDEC registration MO-187, variation BA.

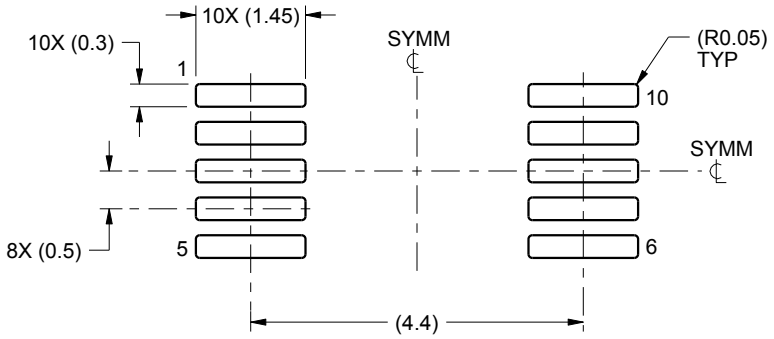

LAND PATTERN EXAMPLE
SCALE:10X

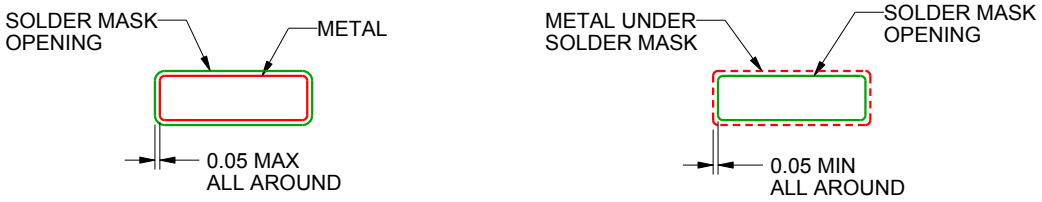

SOLDER MASK DETAILS
NOT TO SCALE

4221984/A 05/2015

NOTES: (continued)

6. Publication IPC-7351 may have alternate designs.
7. Solder mask tolerances between and around signal pads can vary based on board fabrication site.

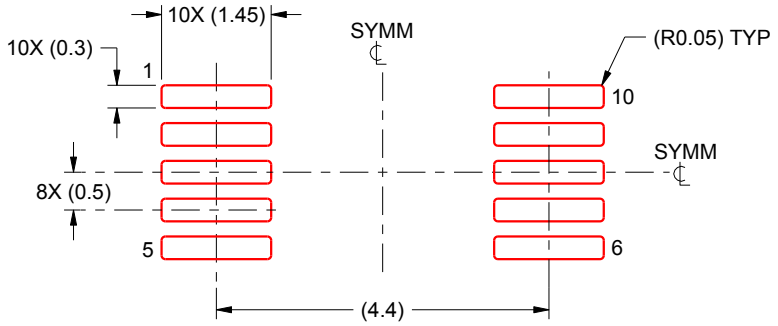

SOLDER PASTE EXAMPLE
BASED ON 0.125 mm THICK STENCIL
SCALE:10X

4221984/A 05/2015

NOTES: (continued)

8. Laser cutting apertures with trapezoidal walls and rounded corners may offer better paste release. IPC-7525 may have alternate design recommendations.
9. Board assembly site may have different recommendations for stencil design.

IMPORTANT NOTICE AND DISCLAIMER

TI PROVIDES TECHNICAL AND RELIABILITY DATA (INCLUDING DATASHEETS), DESIGN RESOURCES (INCLUDING REFERENCE DESIGNS), APPLICATION OR OTHER DESIGN ADVICE, WEB TOOLS, SAFETY INFORMATION, AND OTHER RESOURCES “AS IS” AND WITH ALL FAULTS, AND DISCLAIMS ALL WARRANTIES, EXPRESS AND IMPLIED, INCLUDING WITHOUT LIMITATION ANY IMPLIED WARRANTIES OF MERCHANTABILITY, FITNESS FOR A PARTICULAR PURPOSE OR NON-INFRINGEMENT OF THIRD PARTY INTELLECTUAL PROPERTY RIGHTS.

These resources are intended for skilled developers designing with TI products. You are solely responsible for (1) selecting the appropriate TI products for your application, (2) designing, validating and testing your application, and (3) ensuring your application meets applicable standards, and any other safety, security, or other requirements. These resources are subject to change without notice. TI grants you permission to use these resources only for development of an application that uses the TI products described in the resource. Other reproduction and display of these resources is prohibited. No license is granted to any other TI intellectual property right or to any third party intellectual property right. TI disclaims responsibility for, and you will fully indemnify TI and its representatives against, any claims, damages, costs, losses, and liabilities arising out of your use of these resources.

TI’s products are provided subject to TI’s Terms of Sale (www.ti.com/legal/termsofsale.html) or other applicable terms available either on ti.com or provided in conjunction with such TI products. TI’s provision of these resources does not expand or otherwise alter TI’s applicable warranties or warranty disclaimers for TI products.

Mailing Address: Texas Instruments, Post Office Box 655303, Dallas, Texas 75265
Copyright © 2020, Texas Instruments Incorporated