National Semiconductor

March 1998

LM3621
Single Cell Lithium-Ion Battery Charger Controller

General Description

The LM3621 is a full function constant voltage, constant current (CVCC) lithium-ion (Li+) battery charger controller. It provides 1% regulation accuracy over the specified temperature range without requiring the use of external precision resistors. The IC controls five charge modes: conditioning, fast, top-off, monitor and maintenance. In addition, the LM3621 detects and flags defective batteries as well as over current and over voltage fault events. The architecture of the IC is based on high gain constant voltage and constant current control loops.

The LM3621 is designed to control a switching charger, a linear charger or an off-line ac adapter charger.

The LM3621 consists of a logic controller, precision bandgap reference, wide bandwidth transconductance error amplifiers, comparators, and an output buffer. The LM3621 is available in a 16-pin SOIC package and is specified over the range of 0˚C to 70˚C.

Key Specifications

- Tight output voltage accuracy (±0.5% at T_A = 25˚C)
- Two selectable output voltages (4.2V or 4.1V)
- Less than 1 µA current drain from fully charged battery
- Preconditioning severely discharged cells (0V to 2.55V)

Features

- Automatic end-of-charge control
- Preset or user adjustable charge current regulation
- LED drivers for charging status and fault indication
- Battery self-discharge refresh (maintenance)
- Overvoltage/overcurrent fault detection and protection
- Defective battery pack detection
- Charge current boost control for cellular phone applications
- Charge interruption control input

Applications

- Complete, full function, protected battery charger for coke or graphite anode, single cell Lithium-Ion battery packs
- Linear voltage regulator controlled chargers
- High efficiency switching regulator controlled chargers
- Cost effective wall adapter chargers

Typical Application

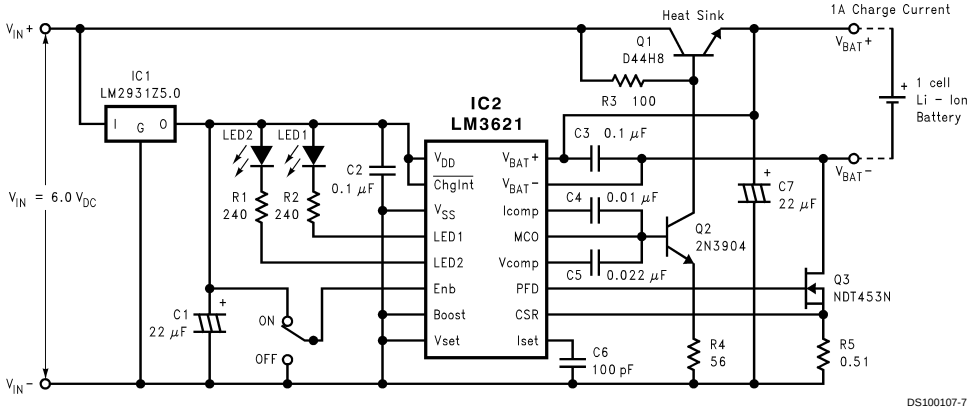

1A, 4.1V CVCC Linear Charger for Graphite Anode Lithium-Ion Battery

© 1998 National Semiconductor Corporation

Connection Diagram

16-Lead SOIC

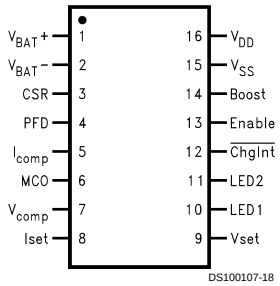

Top View
Order Number LM3621M or LM3621M-3.0
NSC Package Number M16A

Pin Description

Pin No.	Symbol	I/O	Description
1	$V_{BAT}+$	I	Battery pack high side sense input.
2	$V_{BAT}-$	I	Battery pack low side sense input.
3	CSR	I	**C**urrent **S**ense **R**esistor high side input.
4	PFD	O	**P**ass **F**ET gate **D**rive output. (N-channel).
5	I_{COMP}	I	Compensation pin for current regulation loop.
6	MCO	O	**M**odulation **C**ontrol **O**utput- analog control signal output
7	V_{COMP}	I	Compensation pin for voltage regulation loop.
8	I_{SET}	I	Charge current adjust input pin (see application section).
9	V_{SET}	I	Charge termination voltage control input (V_{SET} = HI for 4.2V or V_{SET} = LO for 4.1V).
10	LED1	O	LED driver #1 output (open drain).
11	LED2	O	LED driver #2 output (open drain).
12	$\overline{ChgInt}$	I	Charge current interrupt (active LO).
13	Enable	I	Enable charge cycle control.
14	Boost	I	Maximum output current boost control (max output current increased by 80%).
15	V_{SS}	S	IC common.
16	V_{DD}	S	IC power supply.

Absolute Maximum Ratings (Note 1)

If Military/Aerospace specified devices are required, please contact the National Semiconductor Sales Office/ Distributors for availability and specifications.

Supply Voltage, V_{DD}	6.0V
All pins	$-0.3\ V \le V \le V_{DD}+0.3V$
Power Dissipation	100 mV
ESD Susceptibility (Note 2)	2kV
Junction Temperature	150˚C
Storage Temperature	−65˚C to +150˚C
Lead Temperature, soldering	
Vapor Phase (60 sec)	+215˚C
Infrared (15 sec)	+220˚C

Operating Ratings

Ambient Temperature Range	$0˚C \le T_A \le 70˚C$
Supply Voltage Range (Note 3)	$3.0V \le V_{DD} \le 5.5V$

Electrical Characteristics

V_{DD} = 4.2V unless otherwise specified. Specifications with standard type face are for T_A = 25˚C, and those with **boldface type** apply over **full operating temperature range**.

Symbol	Parameter	Conditions	Min	Typ	Max	Units
V_{OUT}	Battery Regulation Voltage (Note 4)	Charge termination voltage for V_{SET} = HI	4.18	4.2	4.22	V
			4.16		**4.24**	V
		Charge termination voltage for V_{SET} =LO	4.08	4.1	4.12	V
			4.06		**4.14**	V
		Battery conditioning (Hi-Z) charge mode, LM3621M-3.0	2.95	3.1	3.25	V
		Battery conditioning (Hi-Z) charge mode, LM3621M	4.05	4.1	4.15	V
		Monitor Mode float voltage for V_{SET} = HI	**4.05**	4.09	**4.13**	V
		Monitor Mode float voltage for V_{SET} = LO	**3.80**	3.85	**3.90**	V
V_{CSR}	Charge Current Regulation Voltage (Notes 5, 16)	Fast Charge Mode	**0.475**	0.5	**0.525**	V
		Conditioning (Hi-Z) Charge Mode	**0.04**	0.05	**0.06**	V
		Boost Mode	**0.855**	0.9	**0.945**	V
V_{BAT}-Det	Battery Voltage Detection Threshold (Note 6)	Overvoltage Fault Threshold for V_{SET} = HI	**4.28**	4.40	4.50	V
		Overvoltage Fault Threshold for V_{SET} = LO	**4.18**	4.30	4.40	V
		Battery Resistance Free Voltage Threshold	3.55	3.65	3.75	V
		Conditioning (Hi-Z) Charge Mode Threshold	2.45	2.55	2.65	V
			2.40		**2.70**	V
V_{CSR}-Det	Charge Current Voltage Detection Threshold (Notes 7, 16)	End of charge threshold		40		mV
		Over Current Fault Threshold	0.95	1	1.05	V
IQ	Quiescent Current	Standby Mode with I_{OUT} = 0 mA		3	5	mA
I_{OUT}	MCO Output Source Current	V_{MCO} = 1.0V			20	mA
V_{MCO}	Maximum MCO Output Voltage	I_{OUT} = 1 mA, V_{DD} = 5.5V		4.9		V
		I_{OUT} = 1 mA, V_{DD} = 3.0V		2.9		V
GM-V	V-Reg Loop Error Amp Transconductance			0.1		mA/V
I_{SLEW}-V	V-Reg Loop Error Amp Slew Current			100		µA
GM-I	I-Reg Loop Error Amp Transconductance			1		mA/V
I_{SLEW}-I	I-Reg Loop Error Amp Slew Current			200		µA
T_{HR}	1 Hour Timer		55	60	65	min

Electrical Characteristics (Continued)

V_{DD} = 4.2V unless otherwise specified. Specifications with standard type face are for T_A = 25˚C, and those with **boldface type** apply over **full operating temperature range**.

Symbol	Parameter	Conditions	Min	Typ	Max	Units
I_{LKG}-0	Battery Load Current (Note 8)	V_{DD} = 0V		1	**10**	µA
I_{LKG}-MM	Battery Load Current (Note 9)	Monitor Mode		1	**10**	µA
V_{BSD}	Maximum Allowed Battery Self-Discharge(Note 10)	V_{SET} = HI	70	110	150	mV
		V_{SET} = LO	220	260	300	mV
G_{CSR}	Fast Charge Current Regulation Adjustment Transfer Ratio (Notes 11, 12)	V_{ISET} = 0.5V	0.90	0.93	0.96	V/V
I_{LED}	LED1 & LED2 Driver Sink Current	V_{LED1} = V_{LED2} = 1.5V	20			mA
V_{SUV}	Start Up Voltage (Note 13)			3.4		V
V_{UVR}	Under Voltage Reset (Note 14)			2.2		V
V_{PFD}-MAX	Maximum PFD Output Drive	no DC load on PFD	V_{DD}−0.2			V
V_{PFD}-MIN	Minimum PFD Output Drive	no DC load on PFD			V_{SS}+0.1	V
V_{IL}	Logic Input Low (Note 15)				0.5	V
V_{IH}	Logic Input High (Note 15)		V_{DD}−0.5			V
I_{DIG}	Digital Input Leakage Current (Note 15)		−1		1	µA

Note 1: Absolute Maximum Ratings indicates limits beyond which damage to the device may occur. Operating ratings indicate conditions for which the device is intended to be functional, but device parameter specifications may not be guaranteed under these conditions. For guaranteed specifications and test conditions, see the Electrical Characteristics.

Note 2: ESD rating is based on the human body model, 100 pF discharged through 1.5 kΩ.

Note 3: LM3621 requires a minimum V_{DD} of 3.4V to start-up. After start-up, the operating range is 3.0V to 5.5V.

Note 4: V_{OUT} is measured between V_{BAT}+ and CSR.

Note 5: V_{CSR} is measured between CSR and V_{SS} (across the current sense resistor).

Note 6: V_{BAT}-Det is measured between V_{BAT}+ and V_{BAT}−.

Note 7: V_{CSR}-Det is measured between CSR and V_{SS} (across the current sense resistor).

Note 8: This is the current drawn from the battery by the LM3621 when V_{DD} = 0V.

Note 9: This is the current drawn from the battery by the LM3621 when the charger is in Monitor Mode.

Note 10: This is the maximum battery voltage droop that is allowed before the charger initiates a fast charge mode to refresh the battery to its full charge capacity.

Note 11: The current regulation and detection levels can be set by applying a dc voltage adjusting between 0.1V to 1V to the I_{SET} pin without changing the value of the current sense resistor. To ensure proper operation, if the default current regulation and detection values are desired, then a capacitor of at least 100 pF should be connected from I_{SET} to V_{SS} (GND).

Note 12: Transfer ratio of V_{CSR}/V_{ISET} to adjust the fast charge current regulation level. See application section.

Note 13: Minimum V_{DD} supply voltage required at start-up.

Note 14: The LM3621 goes to a shutdown or reset state during "brown out" (i.e., when $V_{DD} < V_{UVR}$)

Note 15: Digital inputs are Enable, Boost, $\overline{Chgint}$ and V_{SET}. To ensure proper operation, never allow any unused input pin to be left open.

Note 16: No external voltage applied to I_{set} pin; a 100 pF capacitor is connected across I_{set} and V_{SS}.

Definition of Terms

V_{OUT}: Voltage measured between V_{BAT}+ and CSR.

V_{CSR}: Charging current sense voltage measured between CSR and V_{SS} (Gnd).

$V_{BATTERY}$: Battery terminal voltage measured between V_{BAT}+ and V_{BAT}−.

ESR: The equivalent series resistance of a battery. The ESR is the purely resistive component of a battery's impedance. Its value is usually determined by the battery construction.

RFV: The RFV (resistance free voltage, often called the float voltage) is the open circuit terminal voltage of a battery which is free from the ESR voltage drop error.

VI_{SET}: External voltage applied to I_{SET} pin, measured between I_{SET} and V_{SS}, to override the default value of V_{CSR}.

Typical Performance Characteristics Unless otherwise specified, T_A = 25˚C)

Charge Termination Voltage Change vs V_{DD}

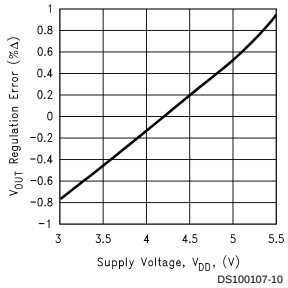

Maximum MCO Output Voltage vs V_{DD}

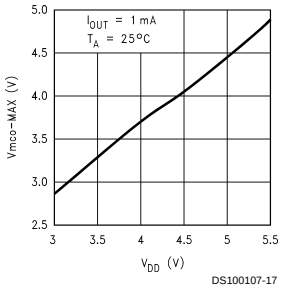

Fast Charge Current Regulation Voltage vs V_{DD}

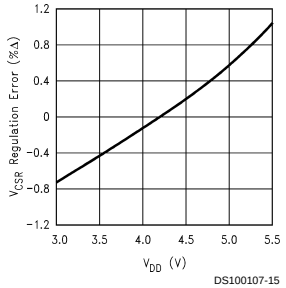

Charge Termination Voltage Regulation vs LED1 or LED2 Sink Current

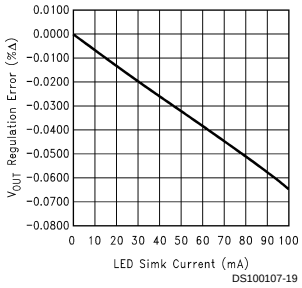

Fast Charge Current Regulation vs LED1 or LED2 Sink Current

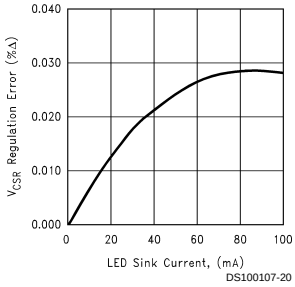

Charge Termination Voltage Regulation vs MCO Output Current, I_{OUT}

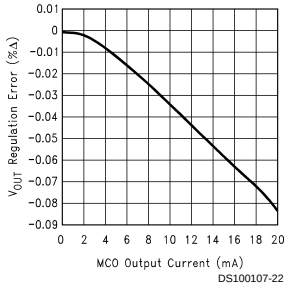

Fast Charge Current Regulation vs MCO Output Current, I_{OUT}

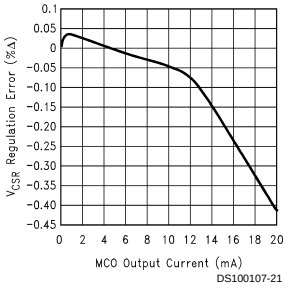

Charger Output Voltage Current Regulation Voltage vs Battery Resistance Free Voltage

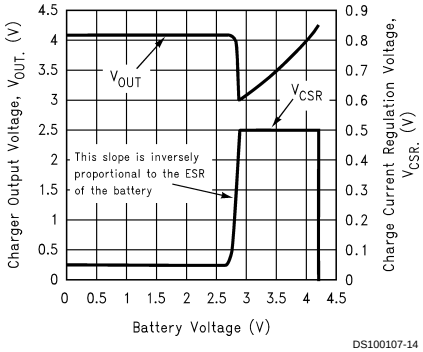

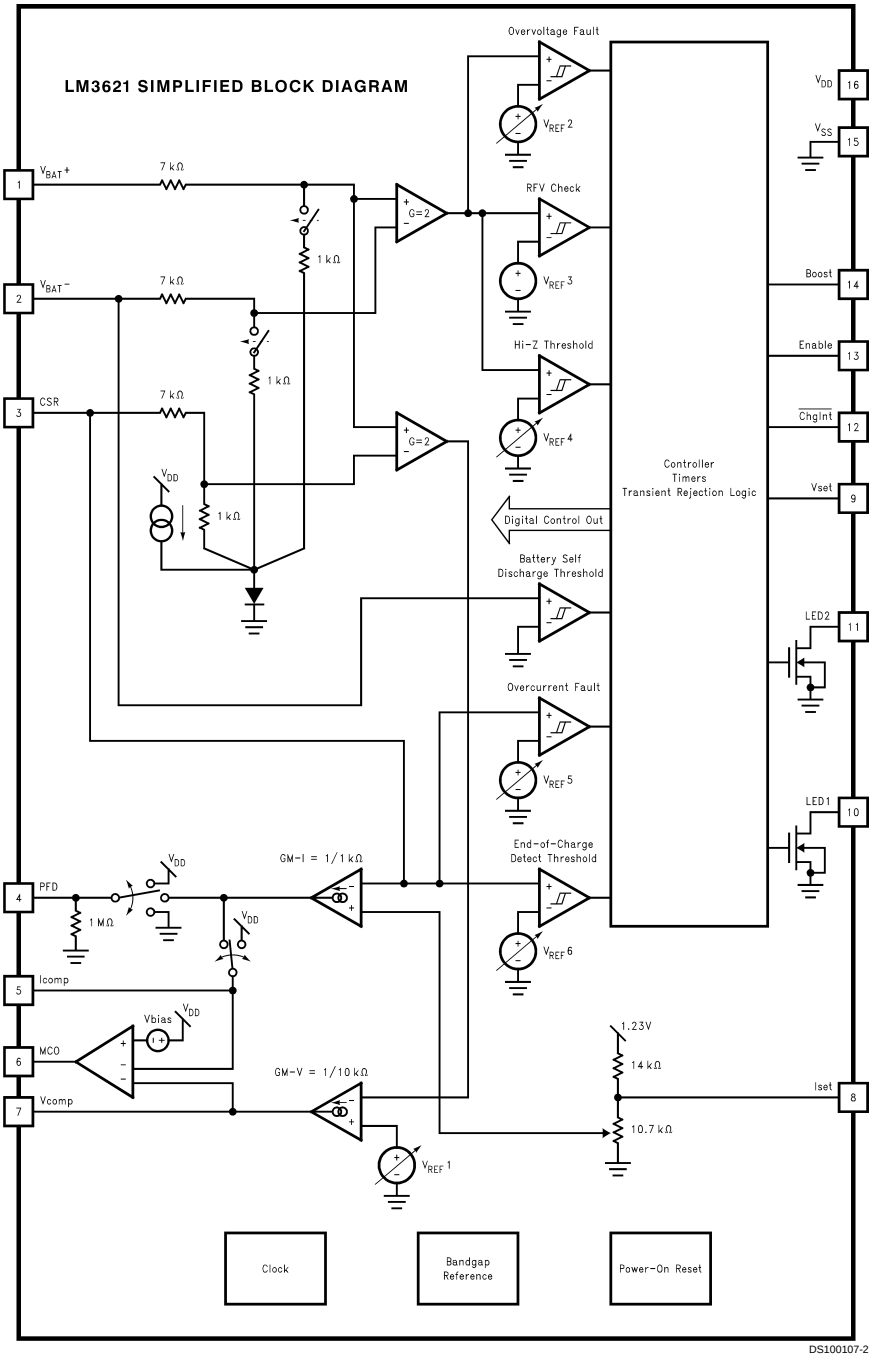

FIGURE 1. LM3621 Simplified Block Diagram

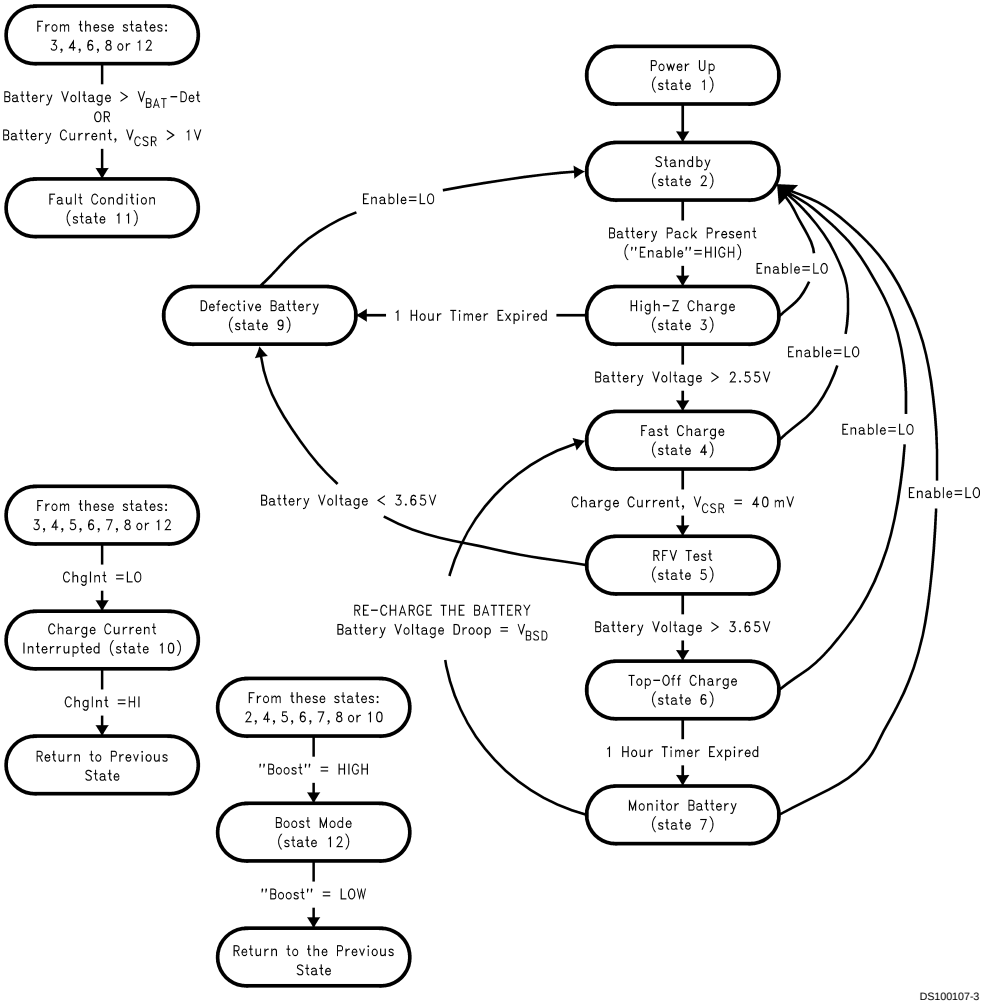

Note 17: State 8 is not used.

FIGURE 2. LM3621 Charge State Diagram

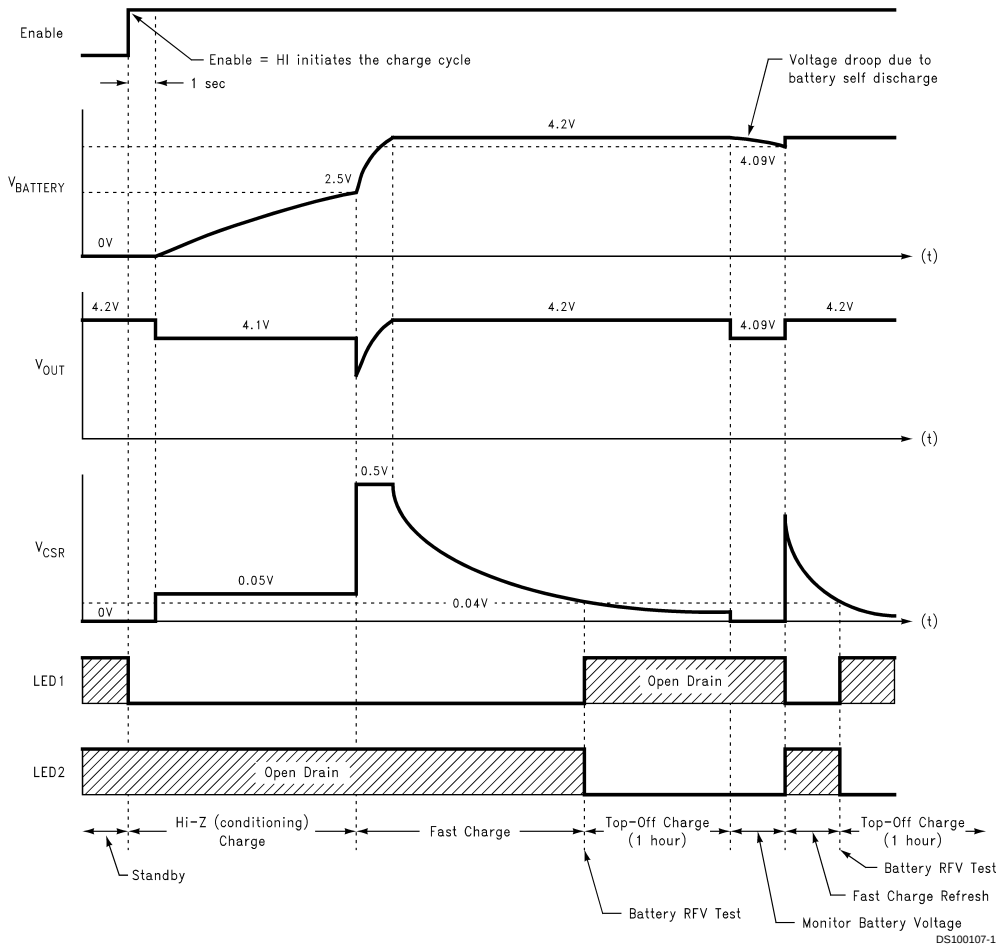

FIGURE 3. Typical Charge Cycle Waveform (V_{SET} = HI)

TABLE 1. Truth Table for Operation of LED Drivers (LED1 and LED2)

Input Conditions							LED Outputs	
Charge Mode	Pack Present? (Enable =HI?)	Defective Pack Detected?	Boost Mode? (Boost = HI?)	Battery Voltage (Note 18)	Charge Current Detect Voltage (Note 19)	Timer	LED1 Output	LED2 Output
Standby	No	X	No	X	X	X	Open Drain	Open Drain
Conditioning (Hi-Z)	Yes	NO	X	< 2.55V	0.05V	< 1hour	Low	Open Drain
Conditioning (Hi-Z)	Yes	Yes, Shorted Battery or No Capacity	X	< 2.55V	0.05V	≥ 1hour	Pulse at 0.8 Hz	Open Drain
Fast Charge	Yes	No	No	≥ 2.55V	> 40mV	X	Low	Open Drain
Fast Charge	Yes	Yes, Open Battery or High ESR	No	RFV ≤ 3.65V	≤ 40mV	X	Pulse at 0.8 Hz	Open Drain
Top-Off	Yes	No	No	= 4.2V	< 40 mV	< 1 hour	Open Drain	Low
Monitor	Yes	No	No	> 4.09V	0	≥ 1 hour	Open Drain	Low
Boost	X	X	Yes	X	X	X	Low	Low
Fault	Yes	X	X	≥ 4.4V	X	X	Pulse at 0.8 Hz	Pulse at 0.8 Hz
Fault	Yes	X	X	X	≥ 1V	X	Pulse at 0.8 Hz	Pulse at 0.8 Hz

Note 18: Battery Voltage =V_{BAT+}− V_{BAT}, V_{SET} = HI

Note 19: Voltage across the current sense resistor connected between CSR and V_{SS}.

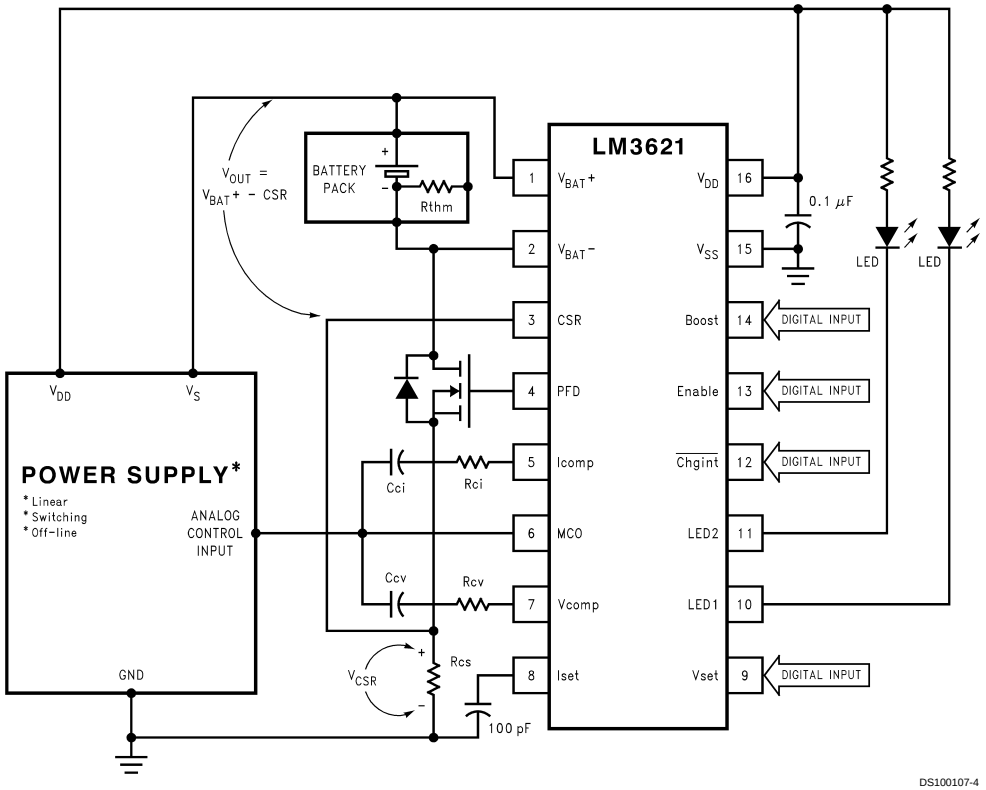

FIGURE 4. General Application Circuit

Application Information

Battery Charger Operation Information

Figure 4 shows a general battery charger configuration using LM3621. The LM3621 provides all the necessary control functions for charging Lithium-Ion batteries precisely and safely. It features constant voltage and constant current mode operation. The on chip timer provides all critical timing functions to properly initialize the charging cycle, avoid over charging the battery above its maximum capacity level, and cut off charging to a defective battery. The LM3621 also provides the high accuracy of output voltage regulation without requiring a trim pot or precision resistors. A built-in power down switch prevents the battery from discharging through the LM3621.

Input Supply Voltage

The voltage supply to LM3621 must never exceed 6.0V or catastrophic damage may occur to the IC. When power is first applied to the battery charger, the LM3621 will remain in a reset state until the voltage on the V_{DD} pin exceeds 3.4V for at least one second. This ensures that the power source is stable before a charge cycle is initiated. *Figure 2* shows the state diagram for the charge cycle operation. Once the LM3621 emerges from the reset state after power up, it will not go into the reset state again until the voltage on the V_{DD} pin drops below approximately 2.2V. When the LM3621 is in the reset state, the PFD (Pass FET Drive) pin is pulled low so that current is not allowed to flow into the load (e.g., Li+ battery). The LM3621 transitions from the reset state to standby mode when the conditions for a stable power source are met.

Digital Control Inputs

The LM3621 has four digital input control pins: Enable, Boost, V_{SET} and $\overline{\text{ChgInt}}$. To ensure proper operation, never allow unused digital input pins to be left open circuited. Enable is used to initiate a charge cycle, Boost is used to increase the maximum regulation current output, V_{SET} controls the maximum output voltage, and $\overline{\text{ChgInt}}$ is used to instantaneously interrupt (and resume) a charge cycle in progress.

Current Boost Mode

This mode is activated when the “Boost” pin is pulled high. The charger increases the maximum output current equal to a V_{CSR} level of 0.9V. This mode of operation is overridden by a charge interrupt signal.

Charge Interrupt Control

Charging is interrupted with the digital input “$\overline{\text{ChgInt}}$” pulled low. The PFD pin is pulled to ground turning off the series low pass FET. This is useful to prevent charging a battery if, for example, the ambient temperature is excessively high.

Application Information (Continued)

Programmable Charge Termination Voltage

The charging status for battery of graphite or coke anode is programmed with the digital input "V_{SET}". V_{SET} = LO for a charge termination voltage of 4.1V, a float voltage of 3.84V and over voltage detection threshold (V_{BAT}-Det) of 4.3V. V_{SET} = HI for a charge termination voltage of 4.2V, float voltage of 4.09V and V_{BAT}-Det of 4.4V.

Defective Pack Detection

The LM3621 automatically checks for defective battery. Whenever a defective pack is detected, the charging sequence is suspended and LED1 driver is pulsed at a rate of 0.8 Hz. A defective battery is indicated under three conditions: (1) when a battery fails to charge up to 2.55V within one hour, (2) when the battery ESR plus the contact resistance is excessive, and (3) when the pack is an open circuit.

Step by Step Description of a Typical Charging Sequence. (Refer to *Figure 3*)

1. Standby Mode

The LM3621 will remain in standby while the digital inputs to the Enable and Boost pins are low. Boost overrides Enable, and Boost mode may be activated at any time with two exceptions: (1) when a deeply discharged battery (i.e., $V_{BATTERY} \leq 2.5V$) is attached to the charger or (2) when $\overline{ChgInt}$ has been activated during a normal charge cycle. Both LED drivers pull low during Boost mode. During standby, the charger's output voltage V_{OUT} is regulated to either 4.2V or 4.1V depending on the state of the digital input to the V_{SET} pin (V_{OUT} = 4.2V when V_{SET} = high or V_{OUT} = 4.1V when V_{SET} = low). PFD is low so the low side pass FET is off. The LED driver pins are high impedance (open drain). *Table 1* shows the state of the LED drivers during various modes of operation.

2. Charging Sequence Initialization

The LM3621 determines the presence or absence of a battery pack by the state of the "Enable" pin. Enable should be pulled low when the pack is not present. When a pack is inserted into the charger, Enable should go high to initiate the charging sequence.

After Enable is asserted with a battery connected to the charger, LED1 goes low and there is a one-second delay before current is allowed to flow into the battery. During this delay, the LM3621 checks the charge condition of the battery to determine if it is grossly overcharged or if it is deeply discharged. If the battery is grossly overcharged, PFD stays low keeping the low side pass FET off, and both LED drivers pulse at a frequency of 0.8 Hz to indicate a fault condition. If the battery is less than 2.55V, the LM3621 goes to the Hi-Z (battery conditioning) charge mode. During the Hi-Z charge mode, V_{OUT} is regulated to 4.1V, and the voltage (V_{CSR}) across the current sense resistor (R_{CS}) is regulated to 50 mV. The LM3621 is capable of charging a battery that has been discharged down to as low as 0V. This is accomplished by the fact that the "ON" resistance of the low side N-channel pass FET is modulated by the PFD output. This ensures that V_{CSR} stays constant at 50 mV regardless of what the battery voltage is, and it prevents the charger's regulation loop from collapsing in the event that the charger's output is shorted. The LM3621 will remain in the Hi-Z Charge mode for a maximum of one hour. If the battery voltage does not increase to at least 2.55V by the end of the one-hour interval, then PFD goes low to turn off the low side pass FET and LED1 will pulse at 0.8 Hz to indicate a defective battery.

3. Fast Charge Mode

The LM3621 will transition to Fast Charge mode whenever the battery voltage is above 2.55V. During Fast Charge mode LED1 stays low and LED2 stays open drain, and the LM3621 controls the charger to behave as a current limited, constant output voltage source to the battery. If the battery voltage is less than 4.2V (for V_{SET} = HI), the LM3621 controls the charger to behave as a constant current source. V_{CSR} is limited to 0.5V, so the maximum charge current delivered to the battery is equal to 0.5V / R_{CS}. Once the battery voltage reaches 4.2V, the LM3621 controls the charger to behave as a constant voltage source, and V_{OUT} is maintained at 4.2V. As the battery continues to charge up, the charge current will decrease. Correspondingly, V_{CSR} will decrease as well.

The battery will continue to charge until V_{CSR} has decreased to 40 mV, at which time PFD pulls low to interrupt the charge current for one second. At the end of the one second interval, the LM3621 checks to see if the battery's Resistance Free Voltage (RFV) is greater than 3.65V or less than 3.65V. If the battery's RFV is less than 3.65V, then the ESR of the battery is excessively high, PFD stays low to keep the charging sequence suspended and LED1 pulses at 0.8 Hz to indicate a defective battery. If the battery's RFV is greater than 3.65V, then the LM3621 transitions to Top-Off mode. At this transition, LED1 becomes open drain and LED2 pulls low indicating a fully charged battery.

4. Top-Off Mode

During Top-Off mode, the battery is trickle charged for one hour. At the end of the one hour interval, PFD goes low to terminate charging (i.e., the charge current is interrupted), and the LM3621 transitions to Battery Monitor mode.

5. Monitor Mode

During Monitor mode, V_{OUT} drops to 4.09V (if V_{SET} is high) or 3.84V (if V_{SET} is low), and the battery is floating. The LM3621 typically draws less than 1 µA from the battery during Monitor mode. If the battery self discharges so that its voltage decreases to 4.09V (if V_{SET} is high) or 3.84V (if V_{SET} is low), then the LM3621 will transition back to Fast Charge mode to refresh the battery and charge it back up to its full capacity (*Figure 2* & *Figure 5*). This process will continue until Enable goes low.

Application Information (Continued)

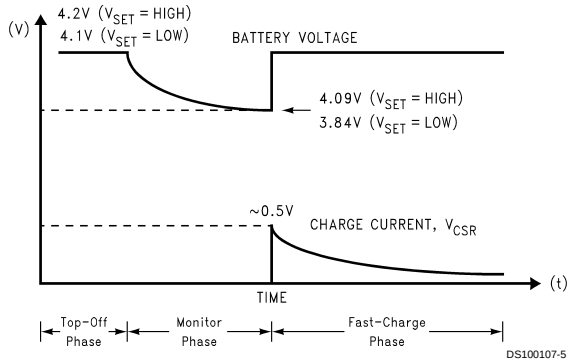

FIGURE 5. Battery Refresh

Fault Protection

LM3621 provides redundant fault protection for a Li-Ion battery pack. If the charger's control loop is accidentally opened, the regulation voltage will begin to increase beyond the level that are safe for the battery. In order to protect the battery from a fault condition, PFD goes low to turn off the series pass FET whenever the voltage across the battery exceeds the over voltage detection threshold (V_{BAT}-Det) or whenever V_{CSR} exceeds 1V. A fault condition also causes both of the LED drivers to pulse at 0.8 Hz. Enable must go low to cause the LM3621 to transition from the Fault State to Standby mode.

Low Current Drain of Battery

If power is inadvertently removed from the battery charger, the voltage at the V_{DD} pin will collapse to the same potential as the V_{SS} pin. An internal switch will disconnect the circuitry of the LM3621 from the V_{BAT}+ pin so that no more than 1µA (typical) of leakage current will be drawn from the battery.

Adjustable Charge Current

The current sense resistor (Rcs) converts the charging current to a voltage level, V_{CSR}. Applying an external voltage source (V_{EXT}) to the I_{SET} pin will adjust the value of V_{CSR} for Fast Charge current regulation. Simultaneously the regulation level for Boost mode, Hi-Z Charge mode, End-of-Charge threshold and over current detect threshold will also be adjusted accordingly. The voltage at I_{SET} pin should be within the range of $1V \geq V_{ISET} \geq 0.1V$. The transfer functions of V_{CSR} to V_{ISET} are:

Fast Charge Mode, $V_{CSR} = 0.933 \cdot V_{ISET}$

Hi-Z Mode, $V_{CSR} = 0.083 \cdot V_{ISET}$

Boost Mode, $V_{CSR} = 0.48 \cdot V_{ISET} + 0.65$

Over Current Threshold, $V_{CSR} = 0.36 \cdot V_{ISET} + 0.79$

End-Of-Charge, $V_{CSR} = 0.07 \cdot V_{ISET}$

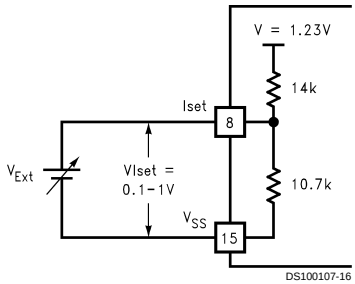

FIGURE 6. Adjusting V_{CSR} by applying V_{EXT} to I_{SET} pin

Application Information (Continued)

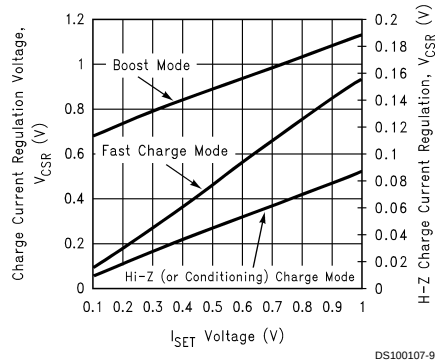

FIGURE 7. Charge Current Regulation (V_{CSR}) vs I_{SET} Voltage

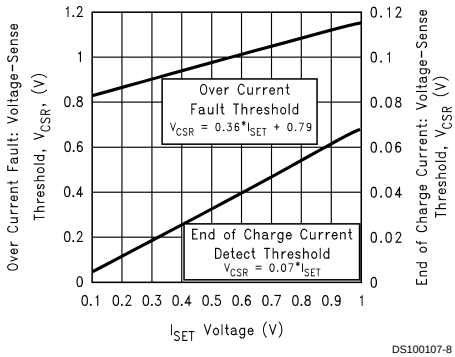

FIGURE 8. Charge Current Detection (V_{CSR}) vs I_{SET} Voltage

Physical Dimensions inches (millimeters) unless otherwise noted

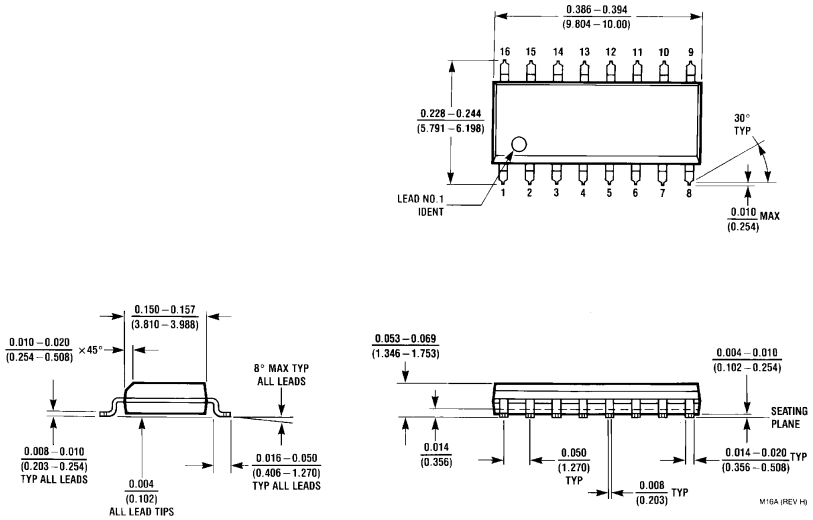

16-Lead SOIC Package
Order Number LM3621M or LM3621M-3.0
NSC Package Number M16A

LIFE SUPPORT POLICY

NATIONAL'S PRODUCTS ARE NOT AUTHORIZED FOR USE AS CRITICAL COMPONENTS IN LIFE SUPPORT DEVICES OR SYSTEMS WITHOUT THE EXPRESS WRITTEN APPROVAL OF THE PRESIDENT OF NATIONAL SEMICONDUCTOR CORPORATION. As used herein:

1. Life support devices or systems are devices or systems which, (a) are intended for surgical implant into the body, or (b) support or sustain life, and whose failure to perform when properly used in accordance with instructions for use provided in the labeling, can be reasonably expected to result in a significant injury to the user.
2. A critical component in any component of a life support device or system whose failure to perform can be reasonably expected to cause the failure of the life support device or system, or to affect its safety or effectiveness.

National Semiconductor Corporation
Americas
Tel: 1-800-272-9959
Fax: 1-800-737-7018
Email: support@nsc.com

www.national.com

National Semiconductor Europe
Fax: +49 (0) 1 80-530 85 86
Email: europe.support@nsc.com
Deutsch Tel: +49 (0) 1 80-530 85 85
English Tel: +49 (0) 1 80-532 78 32
Français Tel: +49 (0) 1 80-532 93 58
Italiano Tel: +49 (0) 1 80-534 16 80

National Semiconductor Asia Pacific Customer Response Group
Tel: 65-2544466
Fax: 65-2504466
Email: sea.support@nsc.com

National Semiconductor Japan Ltd.
Tel: 81-3-5620-6175
Fax: 81-3-5620-6179

National does not assume any responsibility for use of any circuitry described, no circuit patent licenses are implied and National reserves the right at any time without notice to change said circuitry and specifications.