LM3525 Single Port USB Power Switch and Over-Current Protection

Check for Samples: LM3525

FEATURES

- **Compatible with USB1.1 and USB 2.0**
- **1 ms Fault Flag Delay During Hot-Plug Events**
- **Smooth Turn-On Eliminates Inrush Induced Voltage Drop**
- **UL Recognized Component: REF # 205202**
- **1A Nominal Short Circuit Output Current Protects Notebook PC Power Supplies**
- **Thermal Shutdown Protects Device in Direct Short Condition**
- **500mA Minimum Continuous Load Current**
- **Small SOIC-8 Package Minimizes Board Space**
- **2.7V to 5.5V Input Voltage Range**
- **Switch Resistance ≤ 120 mΩ Max. at V_{IN} = 5V**
- **1µA Max Standby Current**
- **100 µA Max Operating Current**
- **Undervoltage Lockout (UVLO)**

APPLICATIONS

- **Universal Serial Bus (USB) Root Hubs including Desktop and Notebook PC**
- **USB Monitor Hubs**
- **Other Self-Powered USB Hub Devices**
- **High Power USB Devices Requiring Inrush Limiting**
- **General Purpose High Side Switch Applications**

DESCRIPTION

The LM3525 provides Universal Serial Bus standard power switch and over-current protection for all host port applications. The single port device is ideal for Notebook PC and Handheld PC applications that supply power to one port.

A 1 ms delay on fault flag output prevents erroneous overcurrent reporting caused by inrush currents during the hot-plug events.

The LM3525 accepts an input voltage between 2.7V and 5.5V allowing use as a device-based inrush current limiter for 3.3V USB peripherals, as well as Root and Self-Powered Hubs at 5.5V. The Enable input accepts both 3.3V and 5.0V logic thresholds.

The small size, low R_{ON}, and 1 ms fault flag delay make the LM3525 a good choice for root hubs as well as ganged power control in space-critical self-powered hubs.

Typical Operating Circuit and Connection Diagram

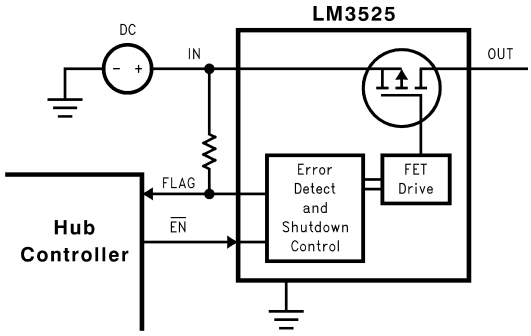

Please be aware that an important notice concerning availability, standard warranty, and use in critical applications of Texas Instruments semiconductor products and disclaimers thereto appears at the end of this data sheet.

All trademarks are the property of their respective owners.

PRODUCTION DATA information is current as of publication date. Products conform to specifications per the terms of the Texas Instruments standard warranty. Production processing does not necessarily include testing of all parameters.

Copyright © 2000–2013, Texas Instruments Incorporated

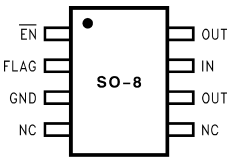

Figure 1. LM3525M-L

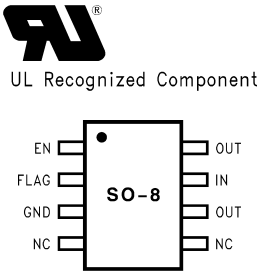

Figure 2. LM3525M-H

These devices have limited built-in ESD protection. The leads should be shorted together or the device placed in conductive foam during storage or handling to prevent electrostatic damage to the MOS gates.

Absolute Maximum Ratings (1)(2)

Supply Voltage	−0.3V to 6.0V
Output Voltage	−0.3V to 6.0V
Voltage at All Other Pins	−0.3V to 5.5V
Power Dissipation (T_A = 25°C)(3)	700 mW
T_{JMAX}(3)	150°C

(1) Absolute Maximum Ratings indicate limits beyond which damage to the device may occur. Electrical specifications do not apply when operating the device beyond its rated operating conditions. Products are not tested under negative Absolute Maximum conditions.
(2) If Military/Aerospace specified devices are required, please contact the Texas Instruments Sales Office/Distributors for availability and specifications.
(3) The maximum power dissipation must be derated at elevated temperatures and is dictated by T_{JMAX} (maximum junction temperature), θ_{JA} (junction to ambient thermal resistance), and T_A (ambient temperature). The maximum allowable power dissipation at any temperature is $P_{DMAX} = (T_{JMAX} - T_A)/\theta_{JA}$ or the number given in the Absolute Maximum Ratings, which ever is lower. The thermal resistance θ_{JA} of the LM3525 in the SOIC-8 package is 150°C/W.

Operating Ratings

Supply Voltage Range	2.7 to 5.5V
Operating Ambient Range	−40°C to +85°C
Operating Junction Temperature Range	−40°C to +125°C
Storage Temperature Range	−65°C to +150°C
Lead Temperature (Soldering, 5 seconds)	260°C
ESD Rating(1)	2 kV

(1) The human body model is a 100 pF capacitor discharged through a 1.5 kΩ resistor into each pin.

Copyright © 2000–2013, Texas Instruments Incorporated

DC Electrical Characteristics

Limits in standard typeface are for T_J = 25°C, and limits in **boldface** type apply over the full operating temperature range. Unless otherwise specified: V_{IN} = 5.0V, $\overline{EN}$ = 0V (LM3525-L) or EN = V_{IN} (LM3525-H).

Symbol	Parameter	Conditions	Min	Typ	Max	Units
R_{ON}	On-Resistance	IN to Out pins V_{IN} = 5V V_{IN} = 2.7V		80 120	120 160	mΩ
I_{OUT}	OUT pins continuous output current		**0.5**			A
I_{SC}	Short Circuit Output Current	See (1)	0.5	1.0	1.5	A
I_{LEAK}	OUT pins Output Leakage Current	$\overline{EN}$ = V_{IN} (LM3525-L) or EN = GND (LM3525-H),		0.15	10	µA
OC_{THRESH}	Over-current Threshold			2.25	3.2	A
R_{FO}	FLAG Output Resistance	I_{FO} = 10 mA, V_{IN} = 5V		6	**25**	Ω
		I_{FO} = 10 mA, V_{IN} = 2.7V		8	**40**	
I_{EN}	$\overline{EN}$/EN Leakage Current	$\overline{EN}$/EN = 0V or $\overline{EN}$/EN = V_{IN}	−0.5		0.5	µA
V_{IH}	$\overline{EN}$/EN Input Voltage	See (2)	**2.4**	1.9		V
V_{IL}	$\overline{EN}$/EN Input Voltage	See (2)		1.7	**0.8**	V
V_{UVLO}	Under-Voltage Lockout	V_{IN} = Increasing V_{IN} = Decreasing		1.9 1.8		V
I_{DDOFF}	Supply Current	Switch OFF		0.05	1	µA
I_{DDON}	Supply Current	Switch ON		65	100	µA
Th_{SD}	Overtemperature Shutdown Threshold (1)	T_J Increasing T_J Decreasing		135 125		°C °C
I_{FH}	Error Flag Leakage Current	V_{FLAG}= 5V		0.1	1	µA

(1) Thermal shutdown will protect the device from permanent damage.
(2) For the LM3525-L, OFF is $\overline{EN}$ ≥ 2.4V and ON is $\overline{EN}$ ≤ 0.8V. For the LM3525-H, OFF is EN ≤ 0.8V and ON is EN ≥ 2.4V

AC Electrical Characteristics

Limits in standard typeface are for T_J = 25°C, and limits in **boldface** type apply over the full operating temperature range. Unless otherwise specified: V_{IN} = 5.0V.

Symbol	Parameter	Conditions	Min	Typ	Max	Units
t_r	OUT Rise Time	R_L = 10Ω		200		µs
t_f	OUT Fall Time	R_L = 10Ω		20		µs
t_{ON}	Turn on Delay, $\overline{EN}$ to OUT	R_L = 10Ω		200		µs
t_{OFF}	Turn off Delay, $\overline{EN}$ to OUT	R_L = 10Ω		20		µs
t_{OC}	Over Current Flag Delay	R_L = 0		1		ms

Copyright © 2000–2013, Texas Instruments Incorporated

TYPICAL APPLICATION CIRCUIT

PIN DESCRIPTION

Pin Number	Pin Name	Pin Function
1	$\overline{EN}$ (LM3525-L) EN (LM3525-H)	Enable (Input): Logic-compatible enable input.
2	FLG	Fault Flag (Output): Active-low, open-drain output. Indicates overcurrent, UVLO and thermal shutdown.
3	GND	Ground
4, 5	NC	Not internally connected.
7	IN	Supply Input: This pin is the input to the power switch and the supply voltage for the IC.
6, 8	OUT	Switch Output: This pin is the output of the high side switch. Pins 6 & 8 must be tied together.

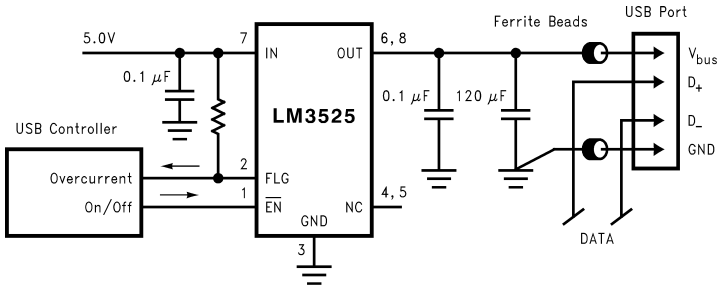

Figure 3. Typical Application Circuit

Copyright © 2000–2013, Texas Instruments Incorporated

Typical Performance Characteristics

V_{IN} = 5.0V, I_L = 500 mA, T_A = 25°C unless otherwise specified.

RDS_{ON} vs V_{IN}

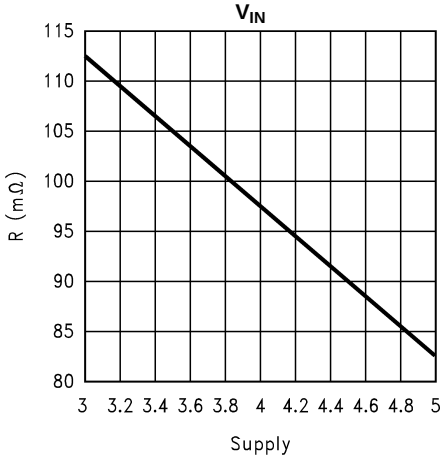

Figure 4.

RDS_{ON} vs Temperature

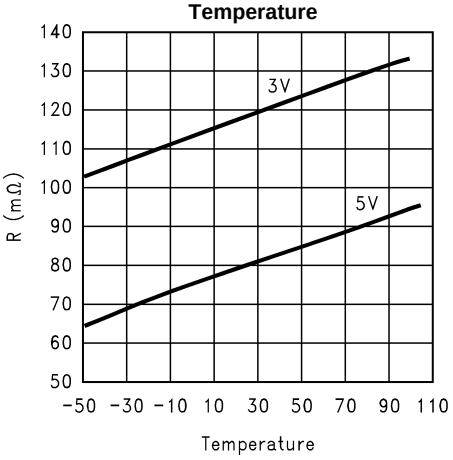

Figure 5.

Current Limit vs Temperature

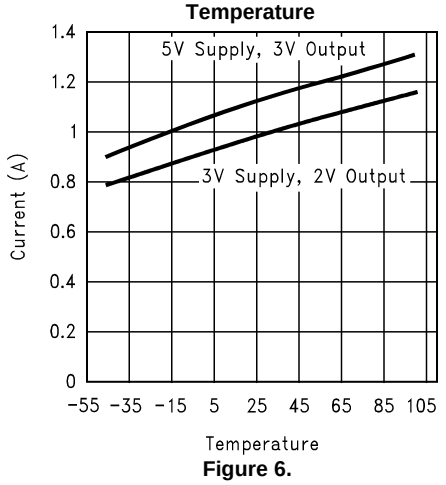

Figure 6.

Over Current Threshold vs Temperature

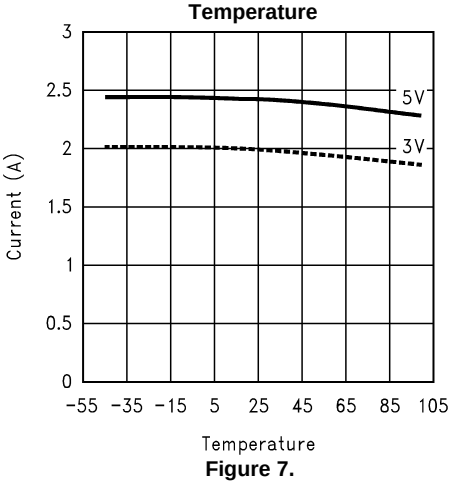

Figure 7.

Delay vs Temperature

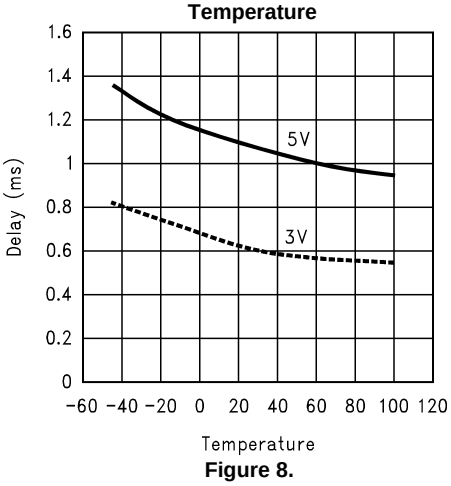

Figure 8.

UVLO Threshold

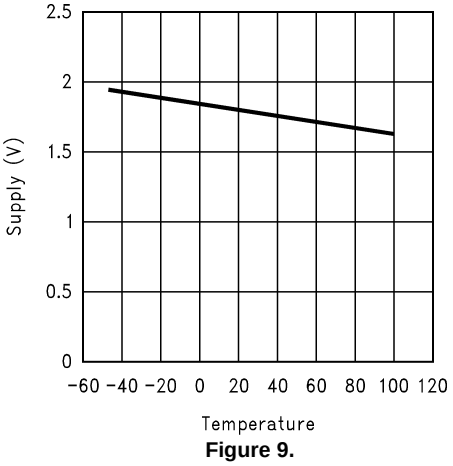

Figure 9.

Copyright © 2000–2013, Texas Instruments Incorporated

Typical Performance Characteristics (continued)

V_{IN} = 5.0V, I_L = 500 mA, T_A = 25°C unless otherwise specified.

Short Circuit Response

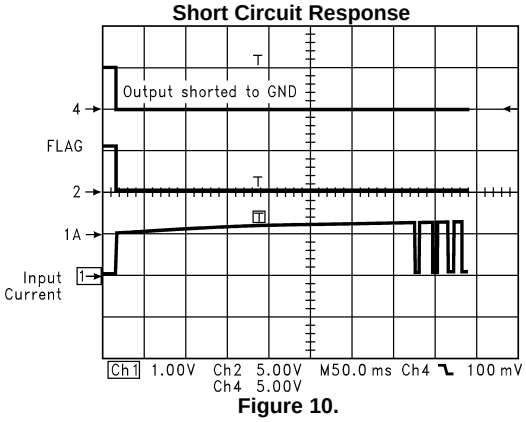

Figure 10.

Under Voltage Lock Out (UVLO)

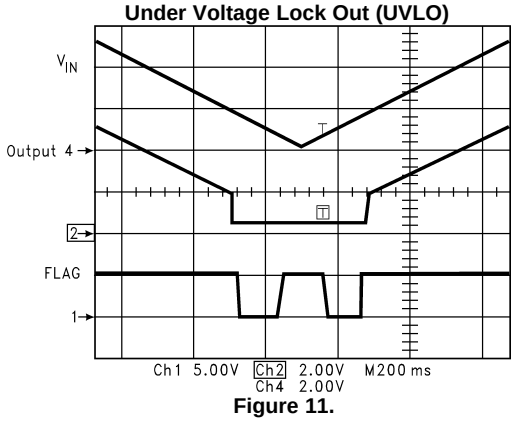

Figure 11.

Turn-ON/OFF Delay and Rise Time/Fall Time

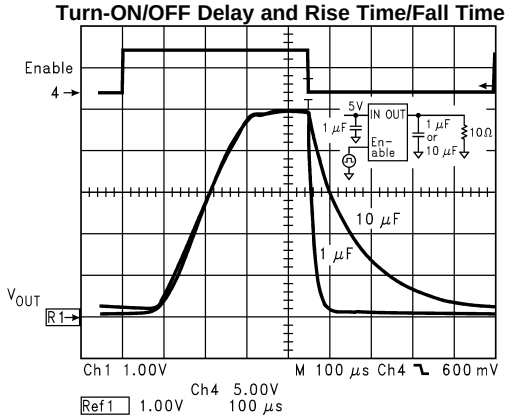

Figure 12.

Short Circuit Current

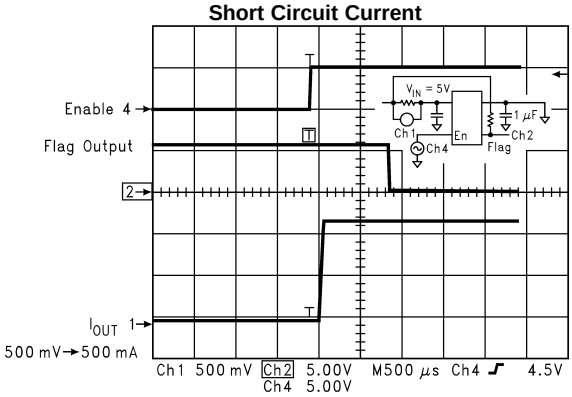

Figure 13.

Copyright © 2000–2013, Texas Instruments Incorporated

FUNCTIONAL DESCRIPTION

The LM3525-H and LM3525-L are high side P-Channel switches with active-high and active-low enable inputs, respectively. Fault conditions turn off and inhibit turn-on of the output transistor and activate the open-drain error flag transistor sinking current to the ground.

INPUT AND OUTPUT

IN (Input) is the power supply connection to the control circuitry and the source of the output MOSFET.

OUT (Output) is the drain of the output MOSFET. In a typical application circuit, current flows through the switch from IN to OUT towards the load.

If V_{OUT} is greater than V_{IN} when the switch is enabled, current will flow from OUT to IN since the MOSFET is bidirectional.

THERMAL SHUTDOWN

LM3525 is internally protected against excessive power dissipation. In the event of a shorted output or heavy loads that could elevate the die temperature to above approximately 135°C, the thermal shutdown circuit of the LM3525 will be activated and the power switch turned off.

The switch is turned on after die temperature drops by 10°C. This built-in temperature hysteresis prevents undesirable oscillation of the thermal protection circuit and allows the device to reset itself after it is cooled down.

UNDERVOLTAGE LOCKOUT

UVLO prevents the MOSFET switch from turning on until input voltage exceeds 1.9V.

UVLO shuts off the MOSFET switch and signals the fault flag if input voltage drops below 1.8V. UVLO functions only when device is enabled.

CURRENT LIMIT

The current limit circuit is designed to protect the system supply, the MOSFET switches and the load from damage caused by excessive currents. The current limit threshold is set internally to allow a minimum of 500 mA through the MOSFET but limit the maximum current to 1.0A typical.

FAULT FLAG

The fault flag is an open-drain output capable of sinking 10 mA load current to typically 60 mV above ground.

The fault flag is active (pulled low) when any of the following conditions are present: undervoltage, current limit, or thermal shutdown.

A 1ms delay in reporting fault condition prevents erroneous fault flags and eliminates the need for external RC delay network.

Application Information

FILTERING

The USB specification indicates that “no less than 120 µF tantalum capacitors” must be used on the output of each downstream port. This bulk capacitance provides the short-term transient current needed during a hot plug-in. Current surges caused by the input capacitance of the down stream device could generate undesirable EMI signals. Ferrite beads in series with all power and ground lines are recommended to eliminate or significantly reduce EMI.

In selecting a ferrite bead, the DC resistance of the wire used must be kept to minimum to reduce the voltage drop.

A 0.01 µF ceramic capacitor is recommended on each port directly between the V_{bus} and ground pins to prevent EMI damage to other components during the hot - detachment.

Copyright © 2000–2013, Texas Instruments Incorporated

Adequate capacitance must be connected to the input of the device to limit the input voltage drop during a hot-plug event to less than 330 mV. For a few tens of µs, the host must supply the inrush current to the peripheral, charging its bulk capacitance to V_{bus}. This current is initially supplied by the input capacitor. A 33 µF 16V tantalum capacitor is recommended.

In choosing the capacitors, special attention must be paid to the Effective Series Resistance, ESR, of the capacitors to minimize the IR drop across the capacitor's ESR.

SOFT START

To eliminate the upstream voltage droop caused by the high in-rush current drawn by the output capacitors, the inrush current is internally limited to 1.0A.

TRANSIENT OVER-CURRENT DELAY

In USB applications, it is required that output bulk capacitance is utilized to support hot-plug events. During hot-plug events, inrush currents may also cause the flag to go active. Since these conditions are not valid over-current faults, the USB controller must ignore the flag during these events.

High transient current is also generated when switch is enabled and large values of capacitance at the output have to be rapidly charged. The inrush currents created could exceed the short circuit current limit threshold of the device forcing it into the current limit mode. The capacitor is charged with the maximum available short circuit current set by the LM3525. The duration of the inrush current depends on the size of the output capacitance and load current. Since this is not a valid fault condition, the LM3525 delays the generation of the fault flag for 1 ms. If condition persists due to other causes such as a short, a fault flag is generated after a 1 ms delay has elapsed.

The LM3525's 1 ms delay in issuing the fault flag is adequate for most applications. If longer delays are required, an RC filter as shown in Figure 14 may be used.

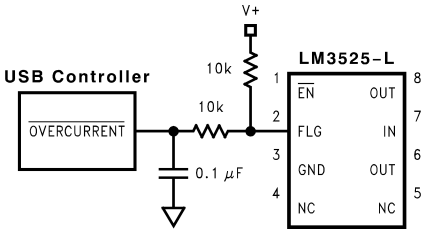

Figure 14. Transient Fitter

PCB LAYOUT CONSIDERATIONS

In order to meet the USB requirements for voltage drop, droop and EMI, each component used in this circuit must be evaluated for its contribution to the circuit performance as shown in Figure 15. The PCB layout rules and guidelines must be followed.

- Place the switch as close to the USB connector as possible. Keep all V_{bus} traces as short as possible and use at least 50-mil, 1 ounce copper for all V_{bus} traces. Solder plating the traces will reduce the trace resistance.
- Avoid vias as much as possible. If vias are used, use multiple vias in parallel and/or make them as large as possible.
- Place the output capacitor and ferrite beads as close to the USB connector as possible.
- If ferrite beads are used, use wires with minimum resistance and large solder pads to minimize connection resistance.

Copyright © 2000–2013, Texas Instruments Incorporated

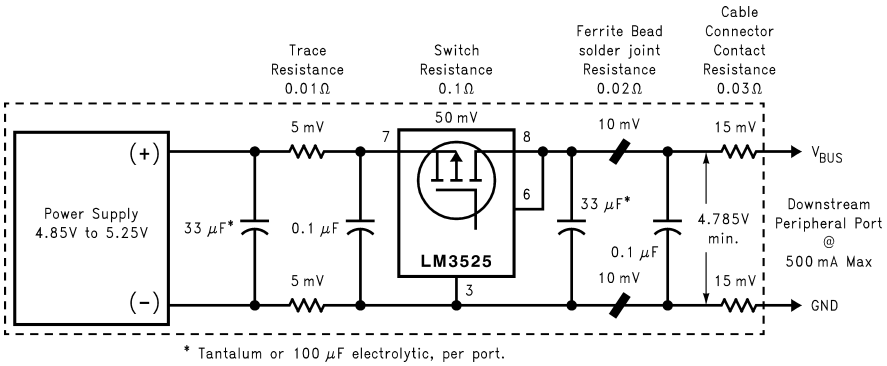

Figure 15. Self-Powered Hub Per-Port Voltage Drop

Typical Applications

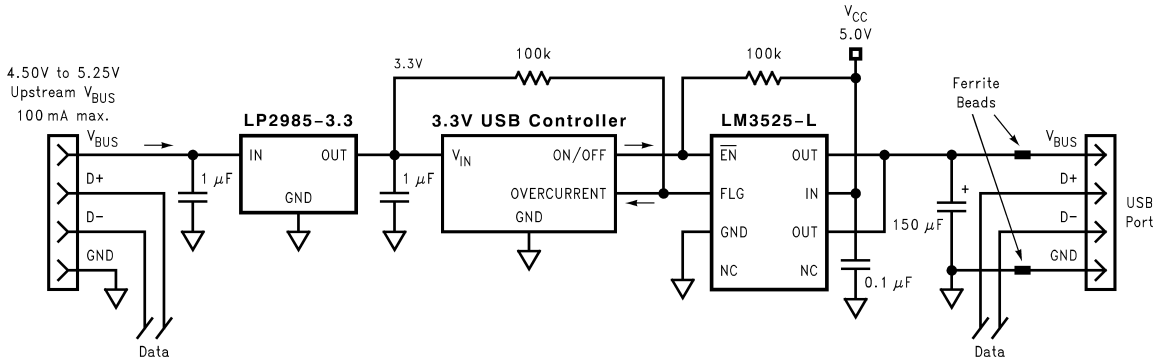

Figure 16. SIngle-Port USB Self-Powered Hub

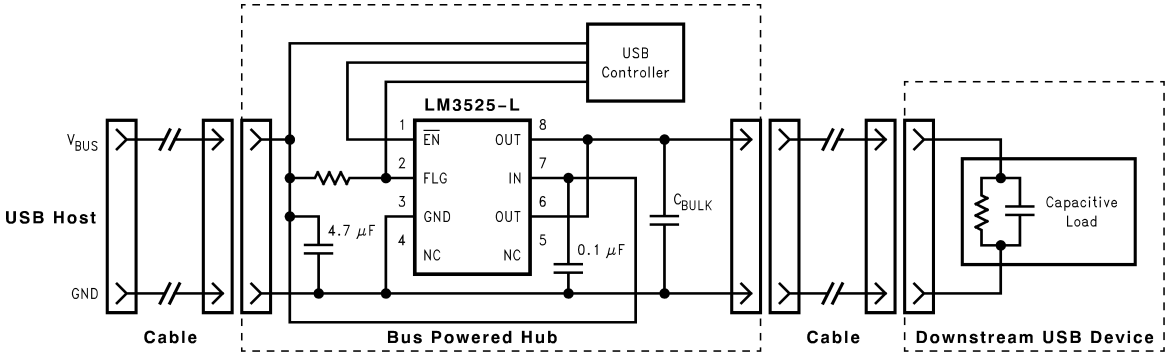

Figure 17. Soft-Start Application

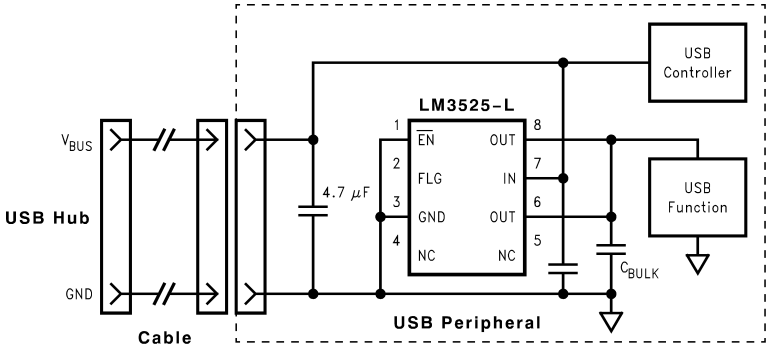

Figure 18. Inrush Current-limit Application

Copyright © 2000–2013, Texas Instruments Incorporated

REVISION HISTORY

Changes from Revision C (March 2013) to Revision D	Page
• Changed layout of National Data Sheet to TI format	10

Copyright © 2000–2013, Texas Instruments Incorporated

PACKAGING INFORMATION

Orderable Device	Status (1)	Package Type	Package Drawing	Pins	Package Qty	Eco Plan (2)	Lead/Ball Finish (6)	MSL Peak Temp (3)	Op Temp (°C)	Device Marking (4/5)	Samples
LM3525M-H	NRND	SOIC	D	8	95	TBD	Call TI	Call TI	-40 to 125	3525 M-H	
LM3525M-H/NOPB	ACTIVE	SOIC	D	8	95	Green (RoHS & no Sb/Br)	CU SN	Level-1-260C-UNLIM	-40 to 125	3525 M-H	Samples
LM3525M-L	NRND	SOIC	D	8	95	TBD	Call TI	Call TI	-40 to 125	3525 M-L	
LM3525M-L/NOPB	ACTIVE	SOIC	D	8	95	Green (RoHS & no Sb/Br)	CU SN	Level-1-260C-UNLIM	-40 to 125	3525 M-L	Samples
LM3525MX-H/NOPB	ACTIVE	SOIC	D	8	2500	Green (RoHS & no Sb/Br)	CU SN	Level-1-260C-UNLIM	-40 to 125	3525 M-H	Samples
LM3525MX-L/NOPB	ACTIVE	SOIC	D	8	2500	Green (RoHS & no Sb/Br)	CU SN	Level-1-260C-UNLIM	-40 to 125	3525 M-L	Samples

(1) The marketing status values are defined as follows:
ACTIVE: Product device recommended for new designs.
LIFEBUY: TI has announced that the device will be discontinued, and a lifetime-buy period is in effect.
NRND: Not recommended for new designs. Device is in production to support existing customers, but TI does not recommend using this part in a new design.
PREVIEW: Device has been announced but is not in production. Samples may or may not be available.
OBSOLETE: TI has discontinued the production of the device.

(2) Eco Plan - The planned eco-friendly classification: Pb-Free (RoHS), Pb-Free (RoHS Exempt), or Green (RoHS & no Sb/Br) - please check http://www.ti.com/productcontent for the latest availability information and additional product content details.
TBD: The Pb-Free/Green conversion plan has not been defined.
Pb-Free (RoHS): TI's terms "Lead-Free" or "Pb-Free" mean semiconductor products that are compatible with the current RoHS requirements for all 6 substances, including the requirement that lead not exceed 0.1% by weight in homogeneous materials. Where designed to be soldered at high temperatures, TI Pb-Free products are suitable for use in specified lead-free processes.
Pb-Free (RoHS Exempt): This component has a RoHS exemption for either 1) lead-based flip-chip solder bumps used between the die and package, or 2) lead-based die adhesive used between the die and leadframe. The component is otherwise considered Pb-Free (RoHS compatible) as defined above.
Green (RoHS & no Sb/Br): TI defines "Green" to mean Pb-Free (RoHS compatible), and free of Bromine (Br) and Antimony (Sb) based flame retardants (Br or Sb do not exceed 0.1% by weight in homogeneous material)

(3) MSL, Peak Temp. - The Moisture Sensitivity Level rating according to the JEDEC industry standard classifications, and peak solder temperature.

(4) There may be additional marking, which relates to the logo, the lot trace code information, or the environmental category on the device.

(5) Multiple Device Markings will be inside parentheses. Only one Device Marking contained in parentheses and separated by a "~" will appear on a device. If a line is indented then it is a continuation of the previous line and the two combined represent the entire Device Marking for that device.

(6) Lead/Ball Finish - Orderable Devices may have multiple material finish options. Finish options are separated by a vertical ruled line. Lead/Ball Finish values may wrap to two lines if the finish value exceeds the maximum column width.

Important Information and Disclaimer: The information provided on this page represents TI's knowledge and belief as of the date that it is provided. TI bases its knowledge and belief on information provided by third parties, and makes no representation or warranty as to the accuracy of such information. Efforts are underway to better integrate information from third parties. TI has taken and continues to take reasonable steps to provide representative and accurate information but may not have conducted destructive testing or chemical analysis on incoming materials and chemicals. TI and TI suppliers consider certain information to be proprietary, and thus CAS numbers and other limited information may not be available for release.

In no event shall TI's liability arising out of such information exceed the total purchase price of the TI part(s) at issue in this document sold by TI to Customer on an annual basis.

TAPE AND REEL INFORMATION

REEL DIMENSIONS

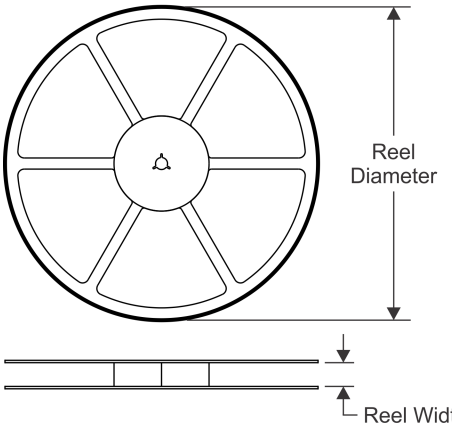

TAPE DIMENSIONS

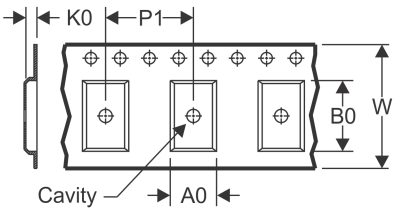

A0	Dimension designed to accommodate the component width
B0	Dimension designed to accommodate the component length
K0	Dimension designed to accommodate the component thickness
W	Overall width of the carrier tape
P1	Pitch between successive cavity centers

QUADRANT ASSIGNMENTS FOR PIN 1 ORIENTATION IN TAPE

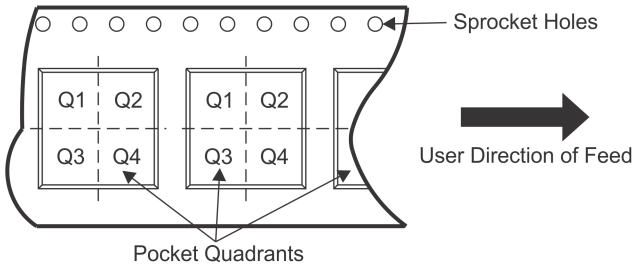

*All dimensions are nominal

Device	Package Type	Package Drawing	Pins	SPQ	Reel Diameter (mm)	Reel Width W1 (mm)	A0 (mm)	B0 (mm)	K0 (mm)	P1 (mm)	W (mm)	Pin1 Quadrant
LM3525MX-H/NOPB	SOIC	D	8	2500	330.0	12.4	6.5	5.4	2.0	8.0	12.0	Q1
LM3525MX-L/NOPB	SOIC	D	8	2500	330.0	12.4	6.5	5.4	2.0	8.0	12.0	Q1

TAPE AND REEL BOX DIMENSIONS

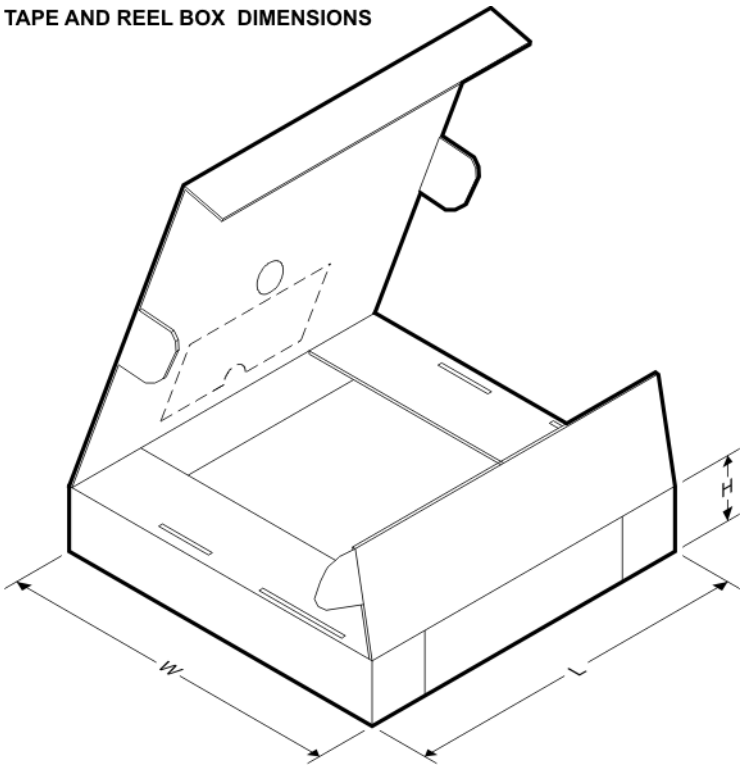

*All dimensions are nominal

Device	Package Type	Package Drawing	Pins	SPQ	Length (mm)	Width (mm)	Height (mm)
LM3525MX-H/NOPB	SOIC	D	8	2500	367.0	367.0	35.0
LM3525MX-L/NOPB	SOIC	D	8	2500	367.0	367.0	35.0

D (R–PDSO–G8) PLASTIC SMALL OUTLINE

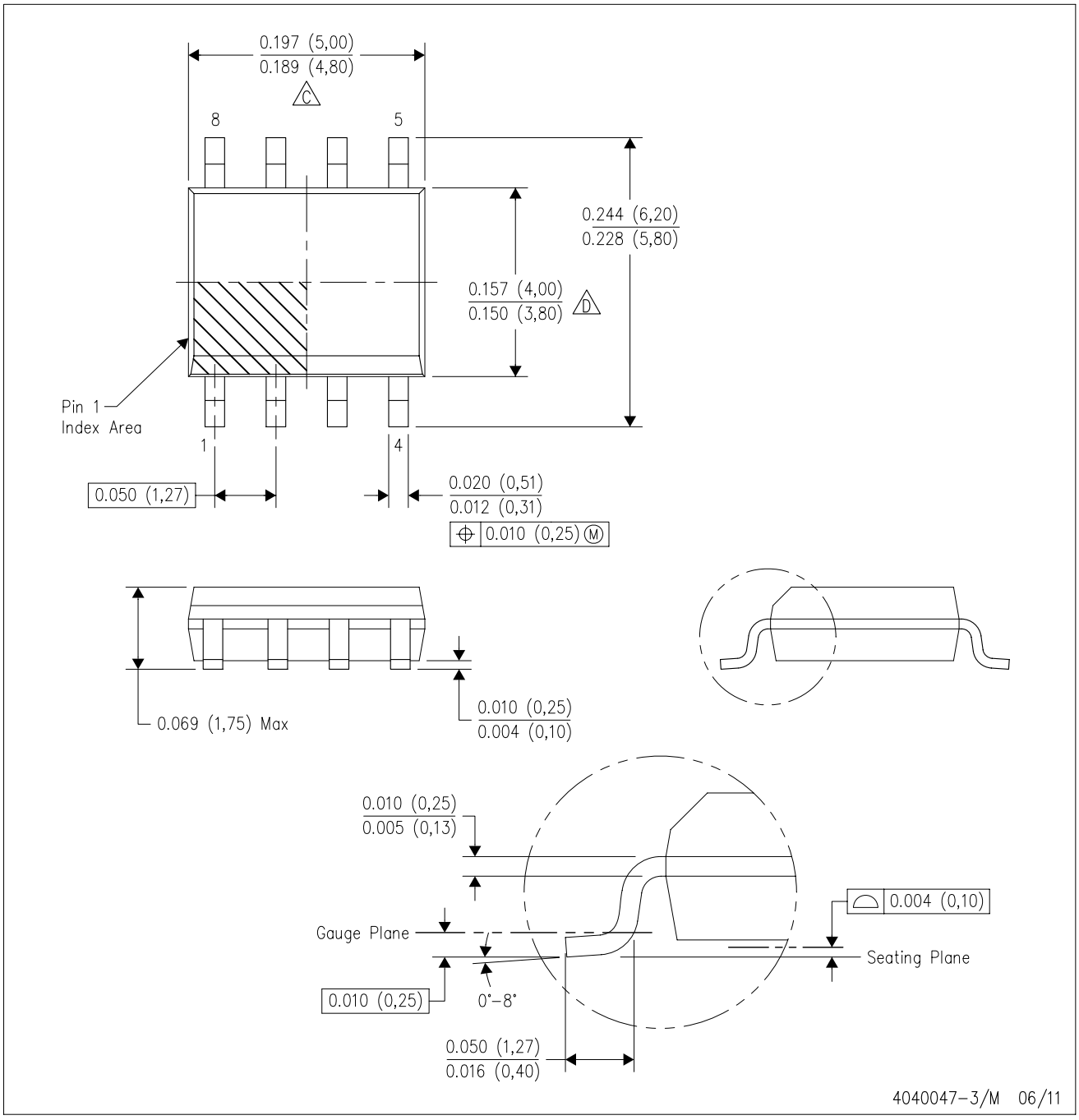

NOTES:
A. All linear dimensions are in inches (millimeters).
B. This drawing is subject to change without notice.
C. Body length does not include mold flash, protrusions, or gate burrs. Mold flash, protrusions, or gate burrs shall not exceed 0.006 (0,15) each side.
D. Body width does not include interlead flash. Interlead flash shall not exceed 0.017 (0,43) each side.
E. Reference JEDEC MS–012 variation AA.

IMPORTANT NOTICE

Texas Instruments Incorporated (TI) reserves the right to make corrections, enhancements, improvements and other changes to its semiconductor products and services per JESD46, latest issue, and to discontinue any product or service per JESD48, latest issue. Buyers should obtain the latest relevant information before placing orders and should verify that such information is current and complete.

TI's published terms of sale for semiconductor products (http://www.ti.com/sc/docs/stdterms.htm) apply to the sale of packaged integrated circuit products that TI has qualified and released to market. Additional terms may apply to the use or sale of other types of TI products and services.

Reproduction of significant portions of TI information in TI data sheets is permissible only if reproduction is without alteration and is accompanied by all associated warranties, conditions, limitations, and notices. TI is not responsible or liable for such reproduced documentation. Information of third parties may be subject to additional restrictions. Resale of TI products or services with statements different from or beyond the parameters stated by TI for that product or service voids all express and any implied warranties for the associated TI product or service and is an unfair and deceptive business practice. TI is not responsible or liable for any such statements.

Buyers and others who are developing systems that incorporate TI products (collectively, "Designers") understand and agree that Designers remain responsible for using their independent analysis, evaluation and judgment in designing their applications and that Designers have full and exclusive responsibility to assure the safety of Designers' applications and compliance of their applications (and of all TI products used in or for Designers' applications) with all applicable regulations, laws and other applicable requirements. Designer represents that, with respect to their applications, Designer has all the necessary expertise to create and implement safeguards that (1) anticipate dangerous consequences of failures, (2) monitor failures and their consequences, and (3) lessen the likelihood of failures that might cause harm and take appropriate actions. Designer agrees that prior to using or distributing any applications that include TI products, Designer will thoroughly test such applications and the functionality of such TI products as used in such applications.

TI's provision of technical, application or other design advice, quality characterization, reliability data or other services or information, including, but not limited to, reference designs and materials relating to evaluation modules, (collectively, "TI Resources") are intended to assist designers who are developing applications that incorporate TI products; by downloading, accessing or using TI Resources in any way, Designer (individually or, if Designer is acting on behalf of a company, Designer's company) agrees to use any particular TI Resource solely for this purpose and subject to the terms of this Notice.

TI's provision of TI Resources does not expand or otherwise alter TI's applicable published warranties or warranty disclaimers for TI products, and no additional obligations or liabilities arise from TI providing such TI Resources. TI reserves the right to make corrections, enhancements, improvements and other changes to its TI Resources. TI has not conducted any testing other than that specifically described in the published documentation for a particular TI Resource.

Designer is authorized to use, copy and modify any individual TI Resource only in connection with the development of applications that include the TI product(s) identified in such TI Resource. NO OTHER LICENSE, EXPRESS OR IMPLIED, BY ESTOPPEL OR OTHERWISE TO ANY OTHER TI INTELLECTUAL PROPERTY RIGHT, AND NO LICENSE TO ANY TECHNOLOGY OR INTELLECTUAL PROPERTY RIGHT OF TI OR ANY THIRD PARTY IS GRANTED HEREIN, including but not limited to any patent right, copyright, mask work right, or other intellectual property right relating to any combination, machine, or process in which TI products or services are used. Information regarding or referencing third-party products or services does not constitute a license to use such products or services, or a warranty or endorsement thereof. Use of TI Resources may require a license from a third party under the patents or other intellectual property of the third party, or a license from TI under the patents or other intellectual property of TI.

TI RESOURCES ARE PROVIDED "AS IS" AND WITH ALL FAULTS. TI DISCLAIMS ALL OTHER WARRANTIES OR REPRESENTATIONS, EXPRESS OR IMPLIED, REGARDING RESOURCES OR USE THEREOF, INCLUDING BUT NOT LIMITED TO ACCURACY OR COMPLETENESS, TITLE, ANY EPIDEMIC FAILURE WARRANTY AND ANY IMPLIED WARRANTIES OF MERCHANTABILITY, FITNESS FOR A PARTICULAR PURPOSE, AND NON-INFRINGEMENT OF ANY THIRD PARTY INTELLECTUAL PROPERTY RIGHTS. TI SHALL NOT BE LIABLE FOR AND SHALL NOT DEFEND OR INDEMNIFY DESIGNER AGAINST ANY CLAIM, INCLUDING BUT NOT LIMITED TO ANY INFRINGEMENT CLAIM THAT RELATES TO OR IS BASED ON ANY COMBINATION OF PRODUCTS EVEN IF DESCRIBED IN TI RESOURCES OR OTHERWISE. IN NO EVENT SHALL TI BE LIABLE FOR ANY ACTUAL, DIRECT, SPECIAL, COLLATERAL, INDIRECT, PUNITIVE, INCIDENTAL, CONSEQUENTIAL OR EXEMPLARY DAMAGES IN CONNECTION WITH OR ARISING OUT OF TI RESOURCES OR USE THEREOF, AND REGARDLESS OF WHETHER TI HAS BEEN ADVISED OF THE POSSIBILITY OF SUCH DAMAGES.

Unless TI has explicitly designated an individual product as meeting the requirements of a particular industry standard (e.g., ISO/TS 16949 and ISO 26262), TI is not responsible for any failure to meet such industry standard requirements.

Where TI specifically promotes products as facilitating functional safety or as compliant with industry functional safety standards, such products are intended to help enable customers to design and create their own applications that meet applicable functional safety standards and requirements. Using products in an application does not by itself establish any safety features in the application. Designers must ensure compliance with safety-related requirements and standards applicable to their applications. Designer may not use any TI products in life-critical medical equipment unless authorized officers of the parties have executed a special contract specifically governing such use. Life-critical medical equipment is medical equipment where failure of such equipment would cause serious bodily injury or death (e.g., life support, pacemakers, defibrillators, heart pumps, neurostimulators, and implantables). Such equipment includes, without limitation, all medical devices identified by the U.S. Food and Drug Administration as Class III devices and equivalent classifications outside the U.S.

TI may expressly designate certain products as completing a particular qualification (e.g., Q100, Military Grade, or Enhanced Product). Designers agree that it has the necessary expertise to select the product with the appropriate qualification designation for their applications and that proper product selection is at Designers' own risk. Designers are solely responsible for compliance with all legal and regulatory requirements in connection with such selection.

Designer will fully indemnify TI and its representatives against any damages, costs, losses, and/or liabilities arising out of Designer's non-compliance with the terms and provisions of this Notice.

Mailing Address: Texas Instruments, Post Office Box 655303, Dallas, Texas 75265
Copyright © 2017, Texas Instruments Incorporated