LM108-N/LM108AQML Operational Amplifiers

Check for Samples: LM108-N, LM108AQML

FEATURES

- **Maximum Input Bias Current of 3.0 nA Over Temperature**
- **Offset Current Less than 400 pA Over Temperature**
- **Supply Current of Only 300 µA, even in Saturation**
- **Ensured Drift Characteristics**

DESCRIPTION

The LM108-N is a precision operational amplifier having specifications a factor of ten better than FET amplifiers over a −55°C to +125°C temperature range.

The devices operate with supply voltages from ±2V to ±20V and have sufficient supply rejection to use unregulated supplies. Although the circuit is interchangeable with, and uses the same compensation as the LM101A, an alternate compensation scheme can be used to make it particularly insensitive to power supply noise and to make supply bypass capacitors unnecessary.

The low current error of the LM108-N makes possible many designs that are not practical with conventional amplifiers. In fact, it operates from 10 MΩ source resistances, introducing less error than devices like the 709 with 10 kΩ sources. Integrators with drifts less than 500 µV/sec and analog time delays in excess of one hour can be made using capacitors no larger than 1 µF.

Connection Diagrams

*Package is connected to Pin 4 (V^-)

**Unused pin (no internal connection) to allow for input anti-leakage guard ring on printed circuit board layout.

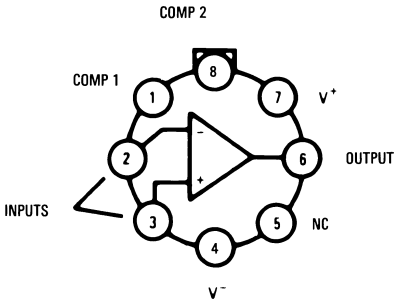

Figure 1. TO-99 Package
8 Lead CDIP Package

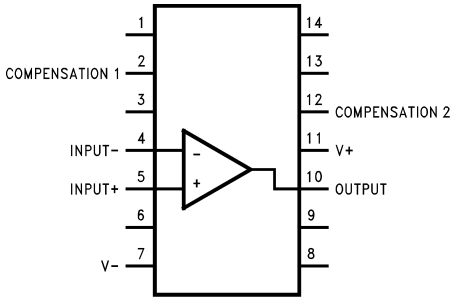

Figure 2. 14 Lead Dual-In-Line Package (Top View)
See Package Number J

Please be aware that an important notice concerning availability, standard warranty, and use in critical applications of Texas Instruments semiconductor products and disclaimers thereto appears at the end of this data sheet.

All trademarks are the property of their respective owners.

PRODUCTION DATA information is current as of publication date. Products conform to specifications per the terms of the Texas Instruments standard warranty. Production processing does not necessarily include testing of all parameters.

Copyright © 2005–2013, Texas Instruments Incorporated

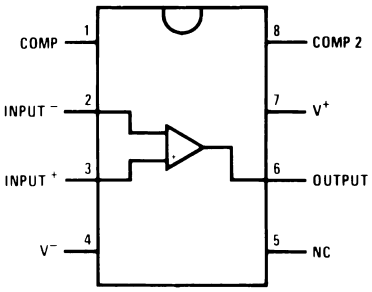

Figure 3. 8 Lead CDIP Package (Top View)
See Package Number NAB0008A

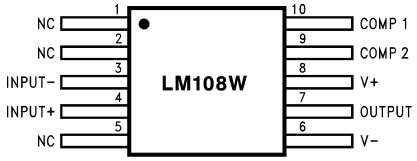

Figure 4. 10 Lead CLGA Package
See Package Number NAD0010A, NAC0010A

Schematic Diagram

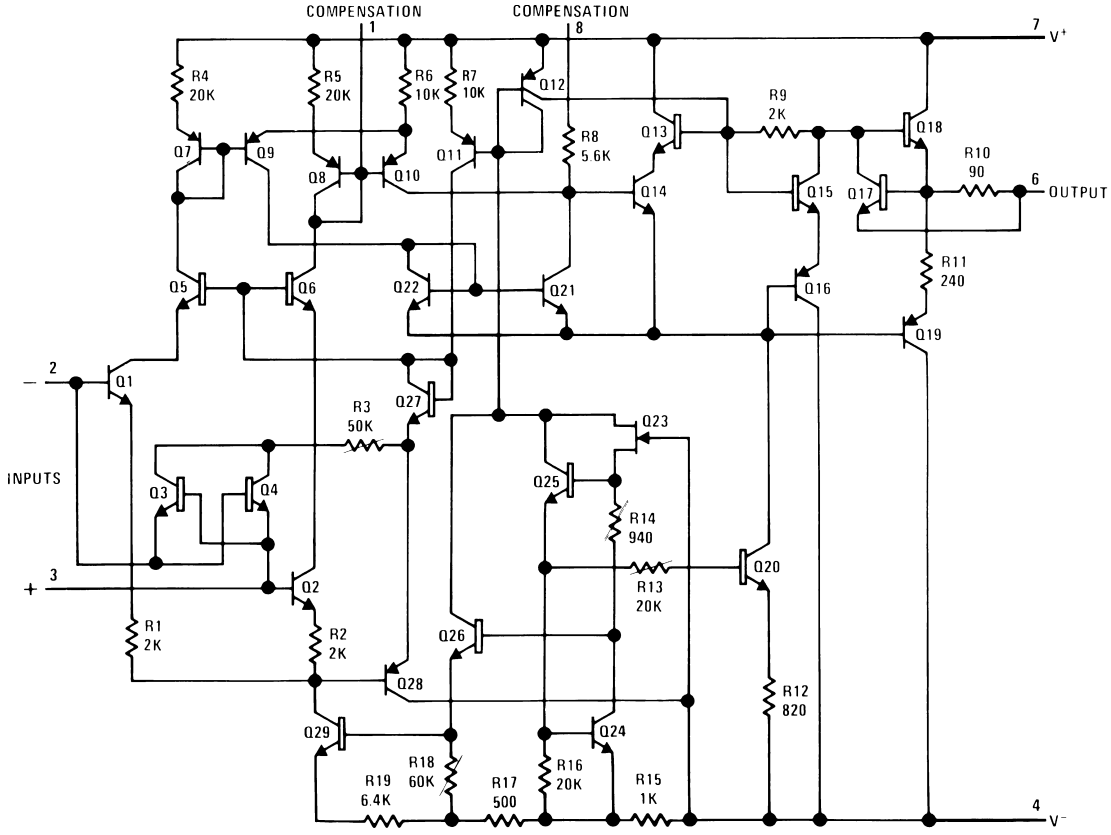

Compensation Circuits

Copyright © 2005–2013, Texas Instruments Incorporated

Standard Compensation Circuit

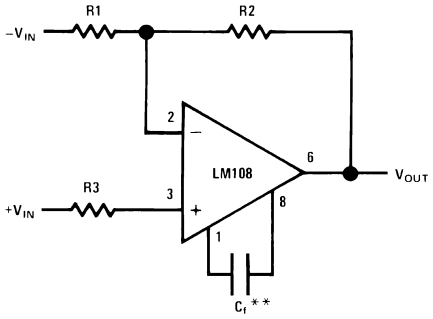

$C_f \geq \frac{R1\ C_O}{R1 + R2}$ C_O = 30 pF

**Bandwidth and slew rate are proportional to $1/C_f$

Alternate Frequency Compensation

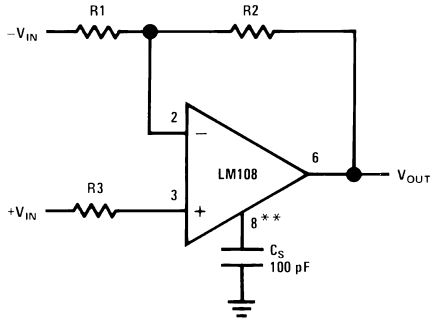

**Bandwidth and slew rate are proportional to $1/C_S$

Note: Improves rejection of power supply noise by a factor of ten.

Figure 5. Feedforward Compensation

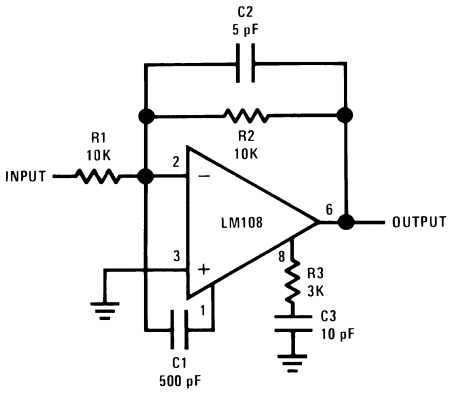

These devices have limited built-in ESD protection. The leads should be shorted together or the device placed in conductive foam during storage or handling to prevent electrostatic damage to the MOS gates.

Copyright © 2005–2013, Texas Instruments Incorporated

Absolute Maximum Ratings[1][2][3]

				LM108-NRH	LM108-N/LM108-NA
Supply Voltage				±22V	±20V
Power Dissipation[4]			TO-99 8 LD	330mW @ +125°C	
			CDIP 14LD	400mW @ +125°C	
			CDIP 8LD	400mW @ +125°C	
			CLGA 10LD	330mW @ +125°C	
			CLGA 10 LD	330mW @ +125°C	
Differential Input Current[5]				±10 mA	
Differential Input Voltage[6]				±30V	N/A
Input Voltage[7]				±20V	±15V
Output Short-Circuit Duration				Continuous	
Operating Temperature Range				$-55°C \le T_A \le +125°C$	
Storage Temperature Range				$-65°C \le T_A \le +150°C$	
Thermal Resistance	θ_{JA}	TO-99	8 LD Still Air	150°C/W	
			500LF / Min Air Flow	86°C/W	
		CDIP	14LD Still Air	94°C/W	
			500LF / Min Air Flow	55°C/W	
		CDIP	8LD Still Air	120°C/W	
			500LF / Min Air Flow	68°C/W	
		CLGA	10LD Still Air	225°C/W	
			500LF / Min Air Flow	142°C/W	
		CLGA	10 LD Still Air	225°C/W	
			500LF / Min Air Flow	142°C/W	
	θ_{JC}		TO-99 8 LD	38°C/W	
			CDIP 14LD	13°C/W	
			CDIP 8LD	17°C/W	
			CLGA 10LD	21°C/W	
			CLGA 10 LD	21°C/W	
Package Weight (typical)			TO-99 8 LD	990mg	
			CDIP 14LD	2,180mg	
			CDIP 8LD	1,090mg	
			CLGA 10LD	225mg	
			CLGA 10 LD	210mg	
Maximum Junction Temperature				175°C	150°C
Lead Temperature (Soldering, 10 sec)				300°C	
ESD Tolerance[8]				2000V	

(1) Parameters have only been entered in the LM108-N / LM108-NA column if different from LM108-NRH

(2) Absolute Maximum Ratings indicate limits beyond which damage to the device may occur. Operating Ratings indicate conditions for which the device is functional, but do not ensure specific performance limits. For ensured specifications and test conditions, see the Electrical Characteristics. The ensured specifications apply only for the test conditions listed. Some performance characteristics may degrade when the device is not operated under the listed test conditions.

(3) If Military/Aerospace specified devices are required, please contact the TI Sales Office/Distributors for availability and specifications.

(4) The maximum power dissipation must be derated at elevated temperatures and is dictated by $T_J$max (maximum junction temperature), θ_{JA} (package junction to ambient thermal resistance), and T_A (ambient temperature). The maximum allowable power dissipation at any temperature is $P_D$max = ($T_J$max - T_A) /θ_{JA} or the number given in the Absolute Maximum Ratings, whichever is lower.

(5) The inputs are shunted with back-to-back diodes for over voltage protection. Therefore, excessive current will flow if a differential input voltage in excess of 1V is applied between the inputs unless some limiting resistance is used.

(6) This rating is ±1.0V unless resistances of 2K Ohms or greater are inserted in series with the inputs to limit current in the input shunt diodes to the maximum allowable value..

(7) For supply voltages less than ±20V, the absolute maximum input voltage is equal to the supply voltage.

(8) Human body model, 1.5 kΩ in series with 100 pF.

Copyright © 2005–2013, Texas Instruments Incorporated

Table 1. Quality Conformance Inspection(1)

Subgroup	Description	Temp (°C)
1	Static tests at	+25°C
2	Static tests at	+125°C
3	Static tests at	−55°C
4	Dynamic tests at	+25°C
5	Dynamic tests at	+125°C
6	Dynamic tests at	−55°C
7	Functional tests at	+25°C
8A	Functional tests at	+125°C
8B	Functional tests at	−55°C
9	Switching tests at	+25°C
10	Switching tests at	+125°C
11	Switching tests at	−55°C

(1) Mil-Std-883, Method 5005 - Group A

LM108-N Electrical Characteristics DC Parameters

The following conditions apply to all the following parameters, unless otherwise specified.
V_{CC} = ±20V, V_{CM} = 0V

Symbol	Parameter	Conditions	Notes	Min	Max	Units	Sub-groups
V_{IO}	Input Offset Voltage	V_{CM} = -15V		-2.0	2.0	mV	1
				-3.0	3.0	mV	2, 3
		V_{CM} = 15V		-2.0	2.0	mV	1
				-3.0	3.0	mV	2, 3
				-2.0	2.0	mV	1
				-3.0	3.0	mV	2, 3
		V_{CC} =±5V		-2.0	2,0	mV	1
				-3.0	3.0	mV	2, 3
I_{IO}	Input Offset Current	V_{CM} = -15V		-0.2	0.2	nA	1
				-0.4	0.4	nA	2, 3
		V_{CM} = 15V		-0.2	0.2	nA	1
				-0.4	0.4	nA	2, 3
				-0.2	0.2	nA	1
				-0.4	0.4	nA	2, 3
		V_{CC} = ±5V		-0.2	0.2	nA	1
				-0.4	0.4	nA	2, 3
$\pm I_{IB}$	Input Bias Current	V_{CM} = -15V		-0.1	2.0	nA	1
				-1.0	3.0	nA	2,
				−0.1	3.0	nA	3
		V_{CM} = 15V		-0.1	2.0	nA	1
				-1.0	3.0	nA	2,
				−0.1	3.0	nA	3
				-0.1	2.0	nA	1
				-1.0	3.0	nA	2,
				−0.1	3.0	nA	3
		V_{CC} = ±5V		-0.1	2.0	nA	1
				-1.0	3.0	nA	2,
				−0.1	3.0	nA	3
PSRR	Power Supply Rejection ±Ratio	±20V <= Vcc <= ±5V		80		dB	1, 2, 3

Copyright © 2005–2013, Texas Instruments Incorporated

LM108-N Electrical Characteristics DC Parameters (continued)

The following conditions apply to all the following parameters, unless otherwise specified.
V_{CC} = ±20V, V_{CM} = 0V

Symbol	Parameter	Conditions	Notes	Min	Max	Units	Sub-groups
CMRR	Common Mode Rejection Ratio	-15V <= V_{CM} <= 15V		85		dB	1, 2, 3
+I_{OS}	Short Circuit Current	V_{CC} = ±15V		-30	-1.0	mA	1, 2, 3
-I_{OS}	Short Circuit Current	V_{CC} = ±15V		1	30	mA	1, 2, 3
I_{CC}	Power Supply Current				0.6	mA	1
					0.4	mA	2
					0.8	mA	3
R_{IN}	Input Resistance		See (1)	30		MΩ	1
V_{IN}	Input Voltage Range	V_{CC} = ±15V	See (2)	14		V	1, 2
			See (2)		−14	V	1, 2
			See (2)	13.5		V	3
			See (2)		−13.5	V	3
			See (2)	15		V	1, 2, 3
			See (2)		−15	V	1, 2, 3
+V_{OP}	Output Voltage Swing	V_{CC} = ±15V, R_L = 10KΩ		13		V	4, 5, 6
-V_{OP}	Output Voltage Swing	V_{CC} = ±15V, R_L = 10KΩ			-13	V	4, 5, 6
+A_{VS}	Open Loop Voltage Gain	V_{CC} = ±15V, R_L = 10KΩ, Vout = 0 to 10V	See (3)	50		V/mV	4
			See (3)	25		V/mV	5, 6
-A_{VS}	Open Loop Voltage Gain	V_{CC} = ±15V, R_L = 10KΩ Vout = 0 to -10V	See (3)	50		V/mV	4
			See (3)	25		V/mV	5, 6

(1) Ensured parameter not tested.
(2) Parameter tested Go-No-Go
(3) Datalog reading in K = V/mV

LM108-N Electrical Characteristics AC Parameters

The following conditions apply to all the following parameters, unless otherwise specified.
V_{CC} = ±20V, V_{CM} = 0V.

Symbol	Parameter	Conditions	Notes	Min	Max	Units	Sub-groups
TR_{TR}	Rise Time		See (1)		1.0	µS	7
TR_{OS}	Overshoot		See (1)		30	%	7

(1) Ensured parameter not tested.

LM108-NA Electrical Characteristics DC Parameters

The following conditions apply to all the following parameters, unless otherwise specified.
V_{CC} = ±20V, V_{CM} = 0V

Symbol	Parameter	Conditions	Notes	Min	Max	Units	Sub-groups
V_{IO}	Input Offset Voltage	V_{CM} = -15V		-0.5	0.5	mV	1
				-1.0	1.0	mV	2, 3
		V_{CM} = 15V		-0.5	0.5	mV	1
				-1.0	1.0	mV	2, 3
				-0.5	0.5	mV	1
				-1.0	1.0	mV	2, 3
		V_{CC} =±5V		-0.5	0.5	mV	1
				-1.0	1.0	mV	2, 3

Copyright © 2005–2013, Texas Instruments Incorporated

LM108-NA Electrical Characteristics DC Parameters (continued)

The following conditions apply to all the following parameters, unless otherwise specified.
V_{CC} = ±20V, V_{CM} = 0V

Symbol	Parameter	Conditions	Notes	Min	Max	Units	Sub-groups
I_{IO}	Input Offset Current	V_{CM} = -15V		-0.2	0.2	nA	1
				-0.4	0.4	nA	2, 3
		V_{CM} = 15V		-0.2	0.2	nA	1
				-0.4	0.4	nA	2, 3
				-0.2	0.2	nA	1
				-0.4	0.4	nA	2, 3
		V_{CC} = ±5V		-0.2	0.2	nA	1
				-0.4	0.4	nA	2, 3
$±I_{IB}$	Input Bias Current	V_{CM} = -15V		-0.1	2.0	nA	1
				-1.0	3.0	nA	2
				-0.1	3.0	nA	3
		V_{CM} = 15V		-0.1	2.0	nA	1
				-1.0	3.0	nA	2
				-0.1	3.0	nA	3
				-0.1	2.0	nA	1
				-1.0	3.0	nA	2
				-0.1	3.0	nA	3
		V_{CC} = ±5V		-0.1	2.0	nA	1
				-1.0	3.0	nA	2
				-0.1	3.0	nA	3
PSRR	Power Supply Rejection Ratio	±20V < = V_{CC} < = ±5V		96		dB	1, 2, 3
CMRR	Common Mode Rejection Ratio	-15V < = V_{CM} < = 15V		96		dB	1, 2, 3
$+I_{OS}$	Short Circuit Current	V_{CC} = ±15V		-30	-1.0	mA	1, 2, 3
$-I_{OS}$	Short Circuit Current	V_{CC} = ±15V		1.0	30	mA	1, 2, 3
I_{CC}	Power Supply Current				0.6	mA	1
					0.4	mA	2
					0.8	mA	3
R_{IN}	Input Resistance		See (1)	30		MΩ	1
V_{IN}	Input Voltage Range	V_{CC} = ±15V	See (2)	14		V	1, 2
			See (2)		−14	V	1, 2
			See (2)	13.5		V	3
			See (2)		−13.5	V	3
			See (2)	15		V	1, 2, 3
			See (2)		−15	V	1, 2, 3

(1) Ensured parameter not tested.
(2) Parameter tested Go-No-Go#SNOSAH42270

Copyright © 2005–2013, Texas Instruments Incorporated

LM108-NA Electrical Characteristics DC Parameters (continued)

The following conditions apply to all the following parameters, unless otherwise specified.
V_{CC} = ±20V, V_{CM} = 0V

Symbol	Parameter	Conditions	Notes	Min	Max	Units	Sub-groups
Delta V_{IO} / Delta T	Temperature Coefficient of Input Offset Voltage		See (3)		5.0	µV/°C	1, 2, 3
Delta I_{IO}/ Delta T	Temperature Coefficient of Input Offset Current		See (3)		2.5	pA/°C	1, 2, 3
$+V_{OP}$	Output Voltage Swing	V_{CC} = ±15V, R_L = 10KΩ		13		V	4, 5, 6
$-V_{OP}$	Output Voltage Swing	V_{CC} = ±15V, R_L = 10KΩ			-13	V	4, 5, 6
$+A_{VS}$	Open Loop Voltage Gain	V_{CC} = ±15V, R_L = 10KΩ, Vout = 0 to 10V	See (4)	80		V/mV	4
			See (4)	40		V/mV	5, 6
$-A_{VS}$	Open Loop Voltage Gain	V_{CC} = ±15V, R_L = 10KΩ, Vout = 0 to -10V	See (4)	80		V/mV	4
			See (4)	40		V/mV	5, 6

(3) Ensured parameter not tested.
(4) Datalog reading in K = V/mV

LM108-NA Electrical Characteristics AC Parameters

The following conditions apply to all the following parameters, unless otherwise specified.
V_{CC} = ±20V, V_{CM} = 0V

Symbol	Parameter	Conditions	Notes	Min	Max	Units	Sub-groups
TR_{TR}	Transient Response Rise Time		See (1)		1.0	µS	7

(1) Ensured parameter not tested.

LM108-NA Rad Hard — Electrical Characteristics DC Parameters

The following conditions apply to all the following parameters, unless otherwise specified.
±V_{CC} = ±20V, V_{CM} = 0V, R_S = 50Ω

Symbol	Parameter	Conditions	Notes	Min	Max	Units	Sub-groups
V_{IO}	Input Offset Voltage	$+V_{CC}$ = 35V, $-V_{CC}$ = -5V, V_{CM} = -15V		-0.5	0.5	mV	1
				-1.0	1.0	mV	2, 3
		$+V_{CC}$ = 5V, $-V_{CC}$ = -35V, V_{CM} = 15V		-0.5	0.5	mV	1
				-1.0	1.0	mV	2, 3
				-0.5	0.5	mV	1
				-1.0	1.0	mV	2, 3
		$+V_{CC}$ = +5V, $-V_{CC}$ = -5V		-0.5	0.5	mV	1
				-1.0	1.0	mV	2, 3
Delta V_{IO} / Delta T	Temperature Coefficient of Input Offset Voltage	25°C ≤ T_A ≤ +125°C	See (1)	-5.0	5.0	µV/°C	2
		-55°C ≤ T_A ≤ 25°C	See (1)	-5.0	5.0	µV/°C	3
I_{IO}	Input Offset Current	$+V_{CC}$ = 35V, $-V_{CC}$ = -5V, V_{CM} = -15V		-0.2	0.2	nA	1
				-0.4	0.4	nA	2, 3
		$+V_{CC}$ = 5V, $-V_{CC}$ = -35V, V_{CM} = 15V		-0.2	0.2	nA	1
				-0.4	0.4	nA	2, 3
				-0.2	0.2	nA	1
				-0.4	0.4	nA	2, 3
		$+V_{CC}$ = +5V, $-V_{CC}$ = -5V		-0.2	0.2	nA	1
				-0.4	0.4	nA	2, 3
Delta I_{IO}/ Delta T	Temperature Coefficient of Input Offset Current	25°C ≤ T_A ≤ +125°C	See (1)	-2.5	2.5	pA/°C	2
		-55°C ≤ T_A ≤ 25°C	See (1)	-2.5	2.5	pA/°C	3

(1) Calculated Parameter

Copyright © 2005–2013, Texas Instruments Incorporated

LM108-NA Rad Hard — Electrical Characteristics DC Parameters (continued)

The following conditions apply to all the following parameters, unless otherwise specified.
$\pm V_{CC}$ = ±20V, V_{CM} = 0V, R_S = 50Ω

Symbol	Parameter	Conditions	Notes	Min	Max	Units	Sub-groups
$\pm I_{IB}$	Input Bias Current	$+V_{CC}$ = 35V, $-V_{CC}$ = -5V, V_{CM} = -15V		-0.1	2.0	nA	1
				-1.0	2.0	nA	2
				-0.1	3.0	nA	3
		$+V_{CC}$ = 5V, $-V_{CC}$ = -35V, V_{CM} = 15V		-0.1	2.0	nA	1
				-1.0	2.0	nA	2
				-0.1	3.0	nA	3
				-0.1	2.0	nA	1
				-1.0	2.0	nA	2
				-0.1	3.0	nA	3
		$+V_{CC}$ = +5V, $-V_{CC}$ = -5V		-0.1	2.0	nA	1
				-1.0	2.0	nA	2
				-0.1	3.0	nA	3
+PSRR	Power Supply Rejection Ratio	$+V_{CC}$ = 10V, $-V_{CC}$ = -20V		-16	16	µV/V	1, 2, 3
-PSRR	Power Supply Rejection Ratio	$+V_{CC}$ = 20V, $-V_{CC}$ = -10V		-16	16	µV/V	1, 2, 3
CMRR	Common Mode Rejection Ratio	V_{CM} = ± 15V		96		dB	1, 2, 3
$+I_{OS}$	Short Circuit Current	$+V_{CC}$ = +15V, $-V_{CC}$ = -15V, t ≤ 25mS		-20		mA	1, 2, 3
$-I_{OS}$	Short Circuit Current	$+V_{CC}$ = +15V, $-V_{CC}$ = -15V, t ≤ 25mS			20	mA	1, 2, 3
I_{CC}	Power Supply Current	$+V_{CC}$ = +15V, $-V_{CC}$ = -15V			0.6	mA	1, 2
					0.8	mA	3
$+V_{OP}$	Output Voltage Swing	R_L = 10KΩ		16		V	4, 5, 6
$-V_{OP}$	Output Voltage Swing	R_L = 10KΩ			-16	V	4, 5, 6
$+A_{VS}$	Open Loop Voltage Gain	R_L = 10KΩ, Vout = +15V	See (2)	80		V/mV	4
			See (2)	40		V/mV	5, 6
$-A_{VS}$	Open Loop Voltage Gain	R_L = 10KΩ, Vout = -15V	See (2)	80		V/mV	4
			See (2)	40		V/mV	5, 6
A_{VS}	Open Loop Voltage Gain	$\pm V_{CC}$ = ±5V, R_L = 10KΩ, Vout = ±2V	See (2)	20		V/mV	4, 5, 6

(2) Datalog reading in K = V/mV

LM108-NA Rad Hard — Electrical Characteristics DC Drift Parameters

The following conditions apply to all the following parameters, unless otherwise specified.
$\pm V_{CC}$ = ±20V, V_{CM} = 0V, R_S = 50Ω
Delta calculations performed on JAN S and QMLV devices at group B, subgroup 5 only.

Symbol	Parameter	Conditions	Notes	Min	Max	Units	Sub-groups
V_{IO}	Input Offset Voltage			-0.25	0.25	mV	1
$\pm I_{IB}$	Input Bias Current			-0.5	0.5	nA	1

LM108-NA Rad Hard — Electrical Characteristics AC Parameters

The following conditions apply to all the following parameters, unless otherwise specified.
AC $\pm V_{CC}$ = ±20V, V_{CM} = 0V, R_S = 50Ω

Symbol	Parameter	Conditions	Notes	Min	Max	Units	Sub-groups
TR_{TR}	Transient Response Rise Time	R_L = 10KΩ, C_L = 100pF, f < 1KHz, Vin = +50mV			1,000	nS	9, 10, 11

Copyright © 2005–2013, Texas Instruments Incorporated

LM108-NA Rad Hard — Electrical Characteristics AC Parameters (continued)

The following conditions apply to all the following parameters, unless otherwise specified.

AC $\pm V_{CC} = \pm 20V$, $V_{CM} = 0V$, $R_S = 50\Omega$

Symbol	Parameter	Conditions	Notes	Min	Max	Units	Sub-groups
TR_{OS}	Transient Response Overshoot	$R_L = 10K\Omega$, $C_L = 100pF$, f < 1KHz, Vin = +50mV			50	%	9, 10, 11
$+S_R$	Slew Rate	$A_V = 1$, V_{IN} = -5V to +5V		0.05		V/µS	9, 10, 11
$-S_R$	Slew Rate	$A_V = 1$, V_{IN} = +5V to -5V		0.05		V/µS	9, 10, 11
NI_{BB}	Noise Broadband	BW = 10Hz to 5KHz, $R_S = 0\ \Omega$			15	μV_{RMS}	9
NI_{PC}	Noise Popcorn	BW = 10Hz to 5KHz, R_S= 100KΩ			40	μV_{PK}	9

LM108-NA Rad Hard — Electrical Characteristics Post Radiation Parameters @ +25°C (1)(2)

The following conditions apply to all the following parameters, unless otherwise specified.

DC: $\pm V_{CC} = \pm 20V$, $V_{CM} = 0V$, $R_S = 50\Omega$

Symbol	Parameter	Conditions	Notes	Min	Max	Units	Sub-groups
$\pm I_{IB}$	Input Bias Current	$+V_{CC}$ = 35V, $-V_{CC}$ = -5V, V_{CM} = -15V	See(1)		5.0	nA	1
		$+V_{CC}$ = 5V, $-V_{CC}$ = -35V, V_{CM} = -15V	See(1)		5.0	nA	1
			See(1)		5.0	nA	1
		$+V_{CC}$ = +5V, $-V_{CC}$ = -5V	See(1)		5.0	nA	1
I_{IO}	Input Offset Current	$+V_{CC}$ = 35V, $-V_{CC}$ = -5V, V_{CM} = -15V	See(1)		0.5	nA	1
		$+V_{CC}$ = 5V, $-V_{CC}$ = -35V, V_{CM} = -15V	See(1)		0.5	nA	1
			See(1)		0.5	nA	1
		$+V_{CC}$ = +5V, $-V_{CC}$ = -5V	See(1)		0.5	nA	1

(1) Pre and post irradiation limits are identical to those listed under AC and DC electrical characteristics except as listed in the Post Radiation Limits Table. These parts may be dose rate sensitive in a space environment and demonstrate enhanced low dose rate effect. Radiation end point limits for the noted parameters are specified only for the conditions as specified in MIL-STD-883, Method 1019.5.

(2) Calculated parameter for Class “S” only

Copyright © 2005–2013, Texas Instruments Incorporated

Typical Performance Characteristics

Input Currents

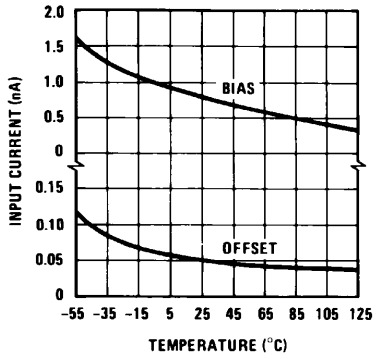

Figure 6.

Offset Error

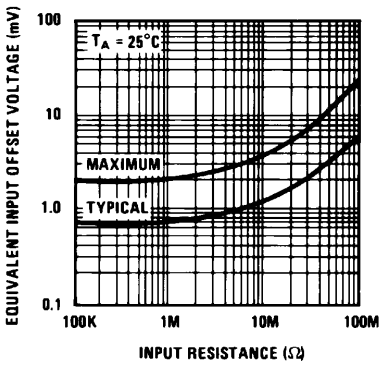

Figure 7.

Drift Error

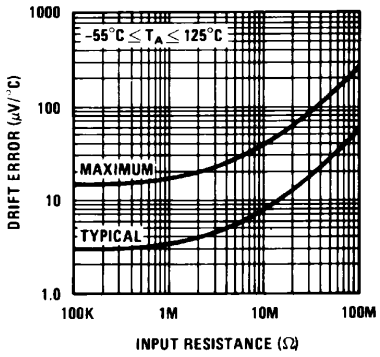

Figure 8.

Input Noise Voltage

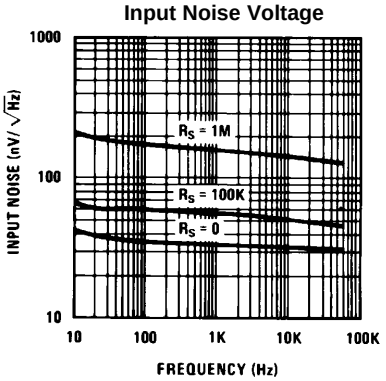

Figure 9.

Power Supply Rejection

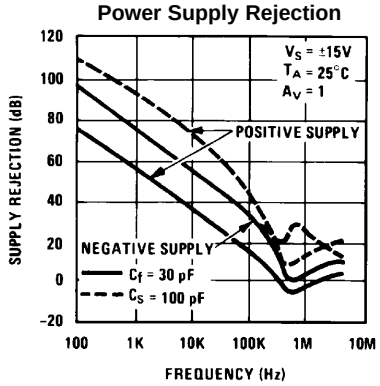

Figure 10.

Closed Loop Output Impedance

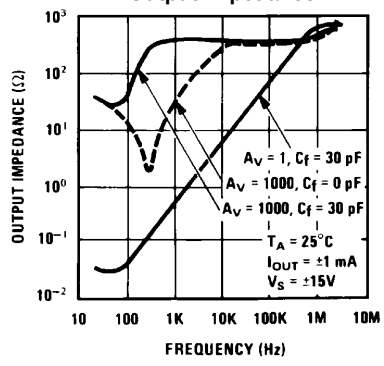

Figure 11.

Typical Performance Characteristics (continued)

Voltage Gain

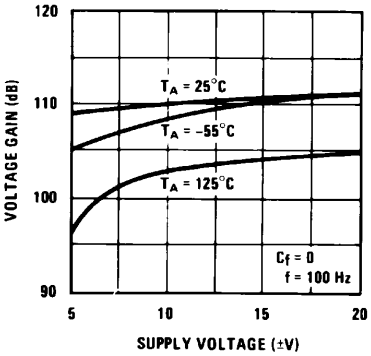

Figure 12.

Output Swing

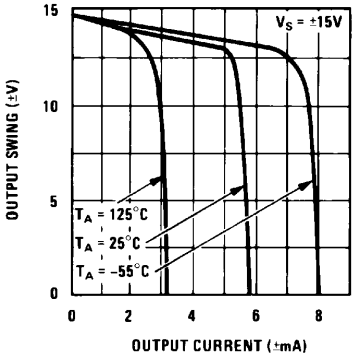

Figure 13.

Supply Current

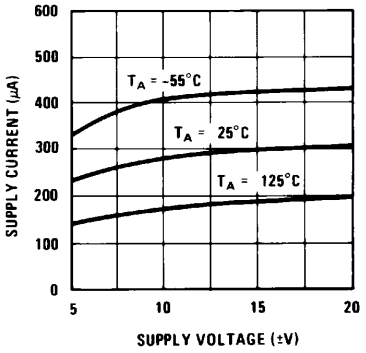

Figure 14.

Open Loop Frequency Response

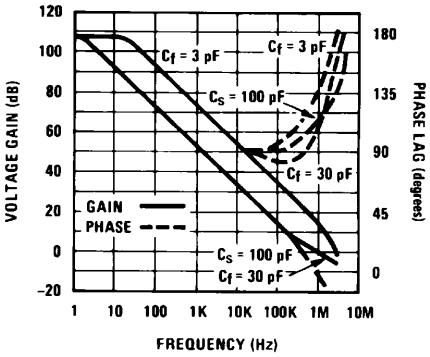

Figure 15.

Large Signal Frequency Response

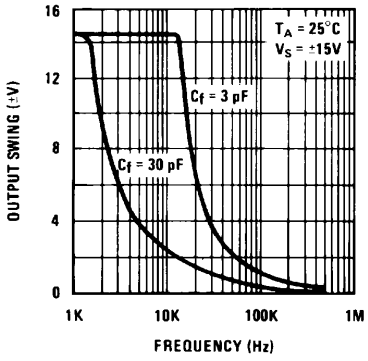

Figure 16.

Voltage Follower Pulse Response

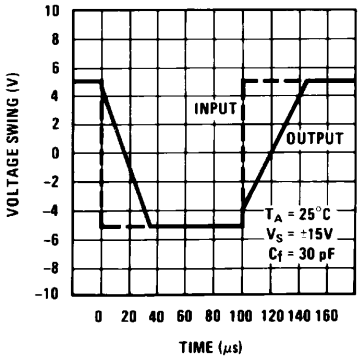

Figure 17.

Copyright © 2005–2013, Texas Instruments Incorporated

TYPICAL APPLICATIONS

Figure 18. Sample and Hold

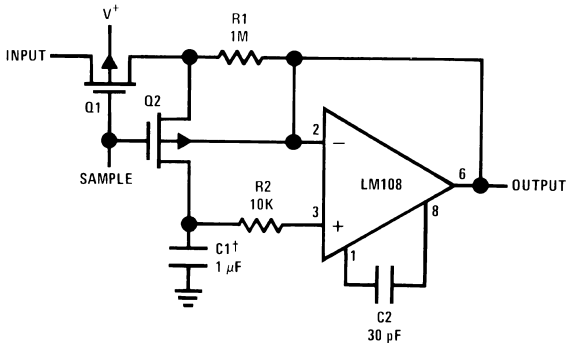

†Teflon polyethylene or polycarbonate dielectric capacitor
Worst case drift less than 2.5 mV/sec

Figure 19. High Speed Amplifier with Low Drift and Low Input Current

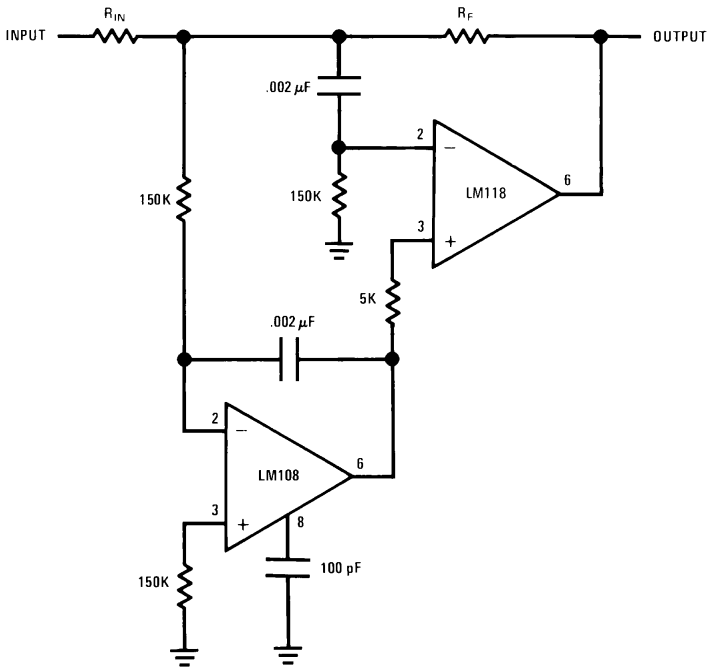

Figure 20. Fast Summing Amplifier

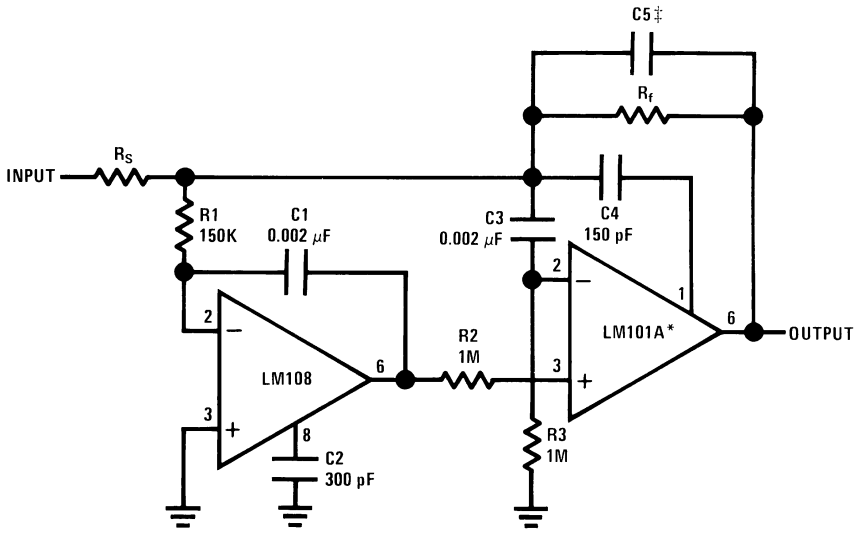

$$‡C5 = \frac{6 \times 10^{-8}}{R_f}$$

*In addition to increasing speed, the LM101A raises high and low frequency gain, increases output drive capability and eliminates thermal feedback.

Note: Power Bandwidth: 250 KHzSmall
Signal Bandwidth: 3.5 MHz
Slew Rate: 10V/µS

Copyright © 2005–2013, Texas Instruments Incorporated

Table 2. Revision History

Date Released	Revision	Section	Originator	Changes
03/23/05	A	New release, corporate format. Ordering information table, Electrical sections for the LM108-N and LM108-NA.	L. Lytle	3 MDS data sheets converted into one Corp. datasheet format. MRLM108-NA-X-RH rev. 1A0, MNLM108-NA-X rev 1A1, MNLM108-N–X rev 0BL. Deleted following: NSID LM108-NAW/883 and LM108-NAJ-8RQML, no longer offered; from LM108-N electrical's Delta V_{IO}/Delta T, Delta I_{IO}/Delta T, Drift Parameters; from LM108-NA electrical's Drift Parameters. Reason: referenced products are 883 only.
12/14/05	B	Rad Hard Electricals, DC Parameters	R. Malone	$+I_{OS}$ from -15 mA min to -20 mA min and $-I_{OS}$ from +15 mA max to +20 mA max. Reason: To reflect SMD update. Revision A will be archived.
03/26/2013	B	All Sections		Changed layout of National Data Sheet to TI format

Copyright © 2005–2013, Texas Instruments Incorporated

NAB0008A

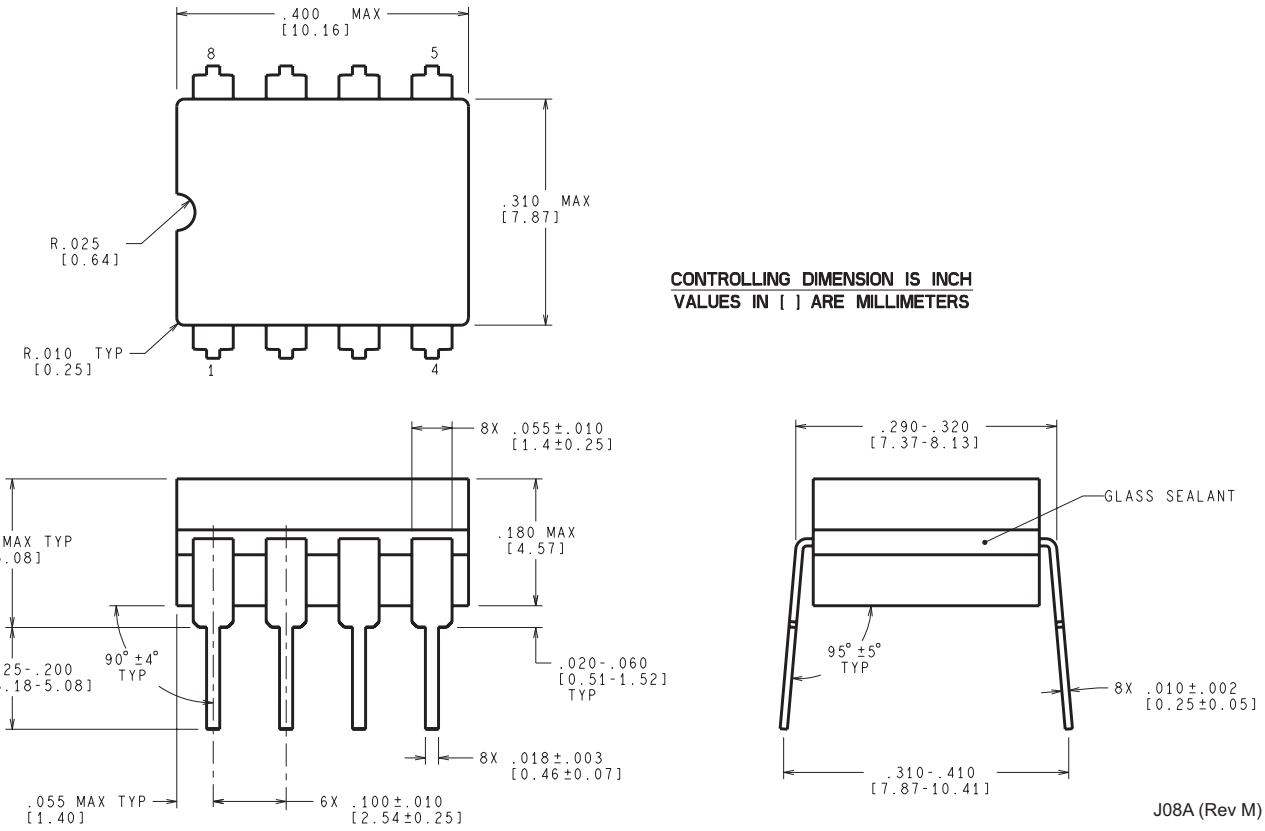
.400 MAX
[10.16]
8
5
.310 MAX
[7.87]
R.025
[0.64]
R.010 TYP
[0.25]
1
4
CONTROLLING DIMENSION IS INCH
VALUES IN [ ] ARE MILLIMETERS
8X .055±.010
[1.4±0.25]
.200 MAX TYP
[5.08]
.180 MAX
[4.57]
8X .125-.200
[3.18-5.08]
90° ±4°
TYP
.020-.060
[0.51-1.52]
TYP
8X .018±.003
[0.46±0.07]
.055 MAX TYP
[1.40]
6X .100±.010
[2.54±0.25]
.290-.320
[7.37-8.13]
GLASS SEALANT
95° ±5°
TYP
8X .010±.002
[0.25±0.05]
.310-.410
[7.87-10.41]
J08A (Rev M)

J (R–GDIP–T**)

14 LEADS SHOWN

CERAMIC DUAL IN–LINE PACKAGE

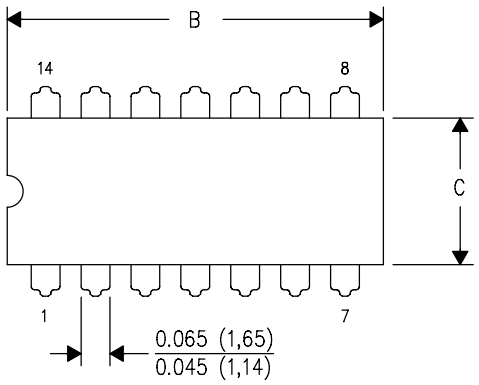

DIM \ PINS **	14	16	18	20
A	0.300 (7,62) BSC	0.300 (7,62) BSC	0.300 (7,62) BSC	0.300 (7,62) BSC
B MAX	0.785 (19,94)	.840 (21,34)	0.960 (24,38)	1.060 (26,92)
B MIN	—	—	—	—
C MAX	0.300 (7,62)	0.300 (7,62)	0.310 (7,87)	0.300 (7,62)
C MIN	0.245 (6,22)	0.245 (6,22)	0.220 (5,59)	0.245 (6,22)

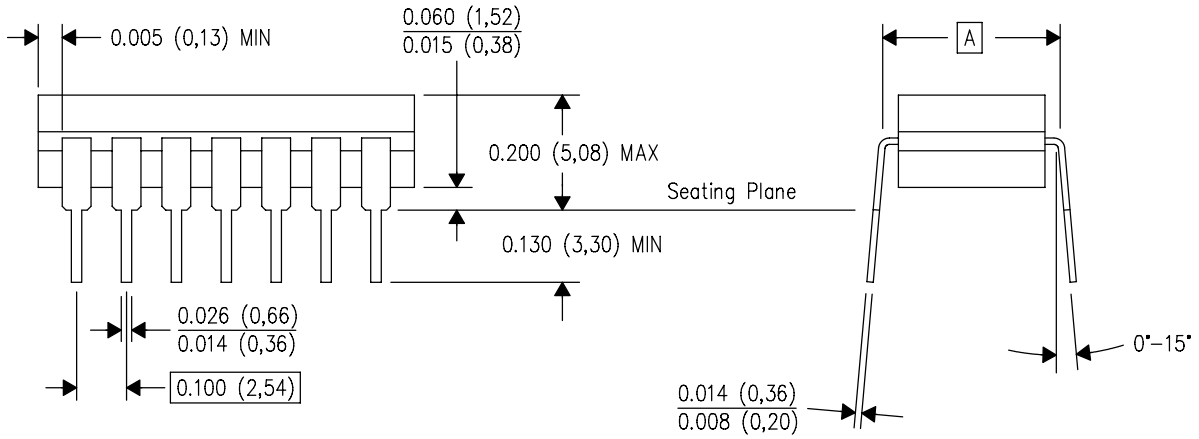

4040083/F 03/03

NOTES:
A. All linear dimensions are in inches (millimeters).
B. This drawing is subject to change without notice.
C. This package is hermetically sealed with a ceramic lid using glass frit.
D. Index point is provided on cap for terminal identification only on press ceramic glass frit seal only.
E. Falls within MIL STD 1835 GDIP1–T14, GDIP1–T16, GDIP1–T18 and GDIP1–T20.

NAC0010A

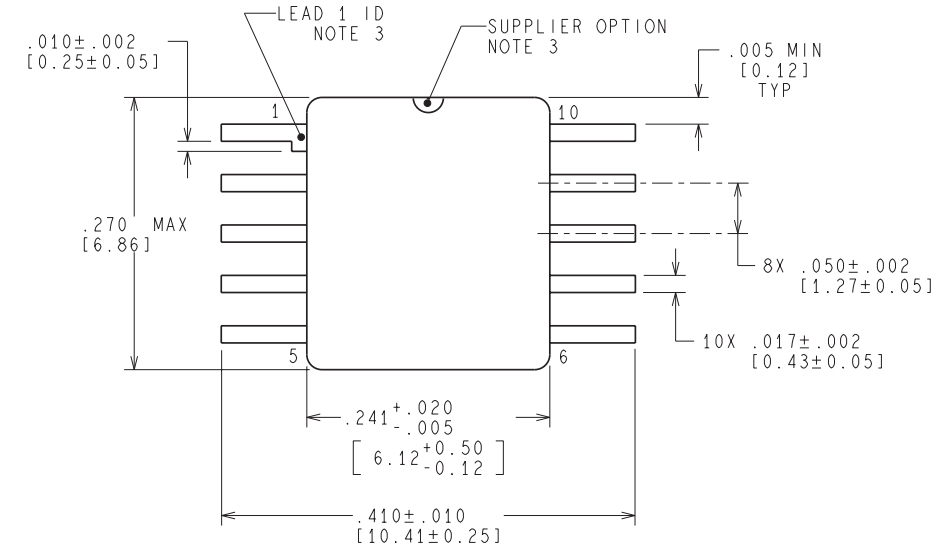

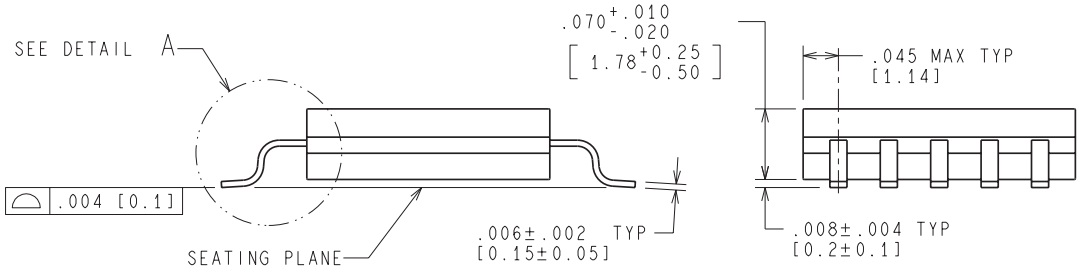

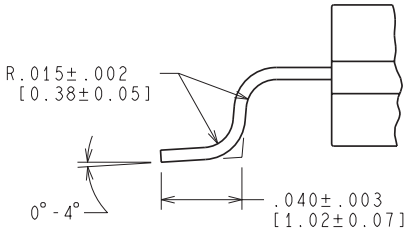

DETAIL A
TYPICAL

MIL-PRF-38535
CONFIGURATION CONTROL

WG10A (Rev H)

NAD0010A

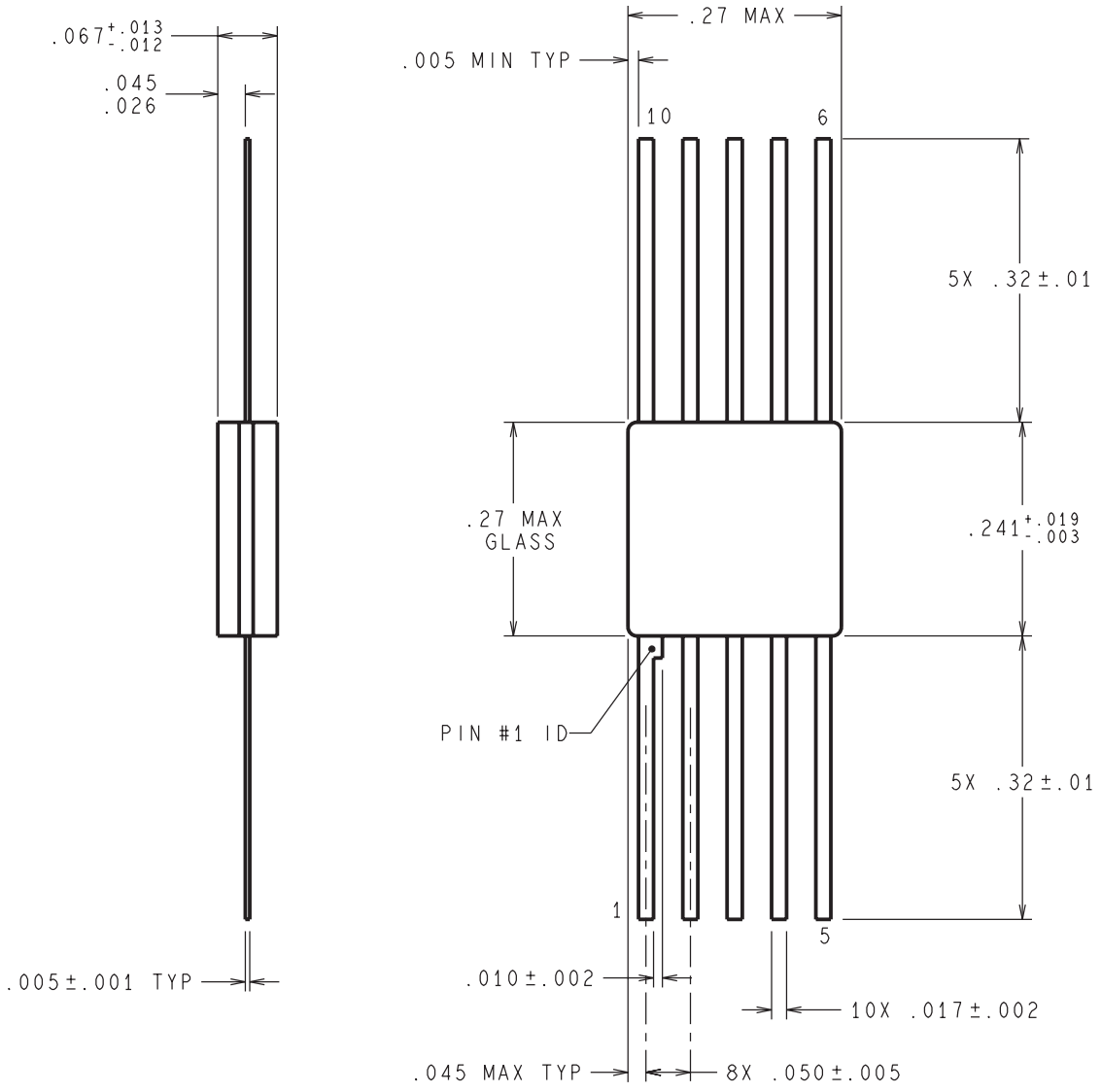

DIMENSIONS ARE IN INCHES

W10A (Rev H)

LMC (O–MBCY–W8) METAL CYLINDRICAL PACKAGE

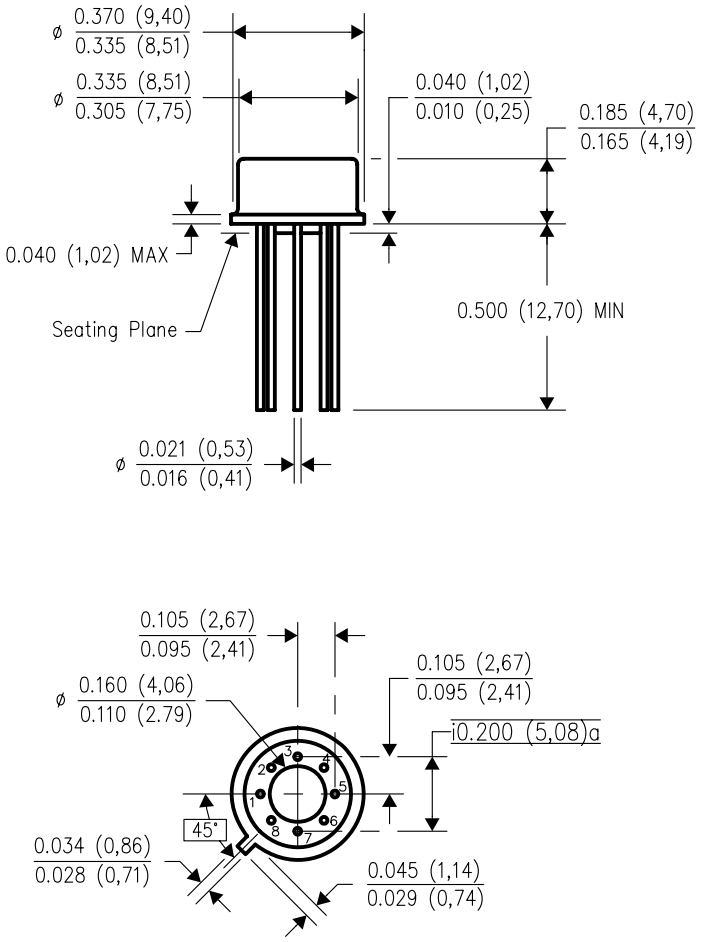

4202483/B 09/07

NOTES:
A. All linear dimensions are in inches (millimeters).
B. This drawing is subject to change without notice.
C. Leads in true position within 0.010 (0,25) R @ MMC at seating plane.
D. Pin numbers shown for reference only. Numbers may not be marked on package.
E. Falls within JEDEC MO–002/TO–99.

IMPORTANT NOTICE

Texas Instruments Incorporated and its subsidiaries (TI) reserve the right to make corrections, enhancements, improvements and other changes to its semiconductor products and services per JESD46, latest issue, and to discontinue any product or service per JESD48, latest issue. Buyers should obtain the latest relevant information before placing orders and should verify that such information is current and complete. All semiconductor products (also referred to herein as “components”) are sold subject to TI’s terms and conditions of sale supplied at the time of order acknowledgment.

TI warrants performance of its components to the specifications applicable at the time of sale, in accordance with the warranty in TI’s terms and conditions of sale of semiconductor products. Testing and other quality control techniques are used to the extent TI deems necessary to support this warranty. Except where mandated by applicable law, testing of all parameters of each component is not necessarily performed.

TI assumes no liability for applications assistance or the design of Buyers’ products. Buyers are responsible for their products and applications using TI components. To minimize the risks associated with Buyers’ products and applications, Buyers should provide adequate design and operating safeguards.

TI does not warrant or represent that any license, either express or implied, is granted under any patent right, copyright, mask work right, or other intellectual property right relating to any combination, machine, or process in which TI components or services are used. Information published by TI regarding third-party products or services does not constitute a license to use such products or services or a warranty or endorsement thereof. Use of such information may require a license from a third party under the patents or other intellectual property of the third party, or a license from TI under the patents or other intellectual property of TI.

Reproduction of significant portions of TI information in TI data books or data sheets is permissible only if reproduction is without alteration and is accompanied by all associated warranties, conditions, limitations, and notices. TI is not responsible or liable for such altered documentation. Information of third parties may be subject to additional restrictions.

Resale of TI components or services with statements different from or beyond the parameters stated by TI for that component or service voids all express and any implied warranties for the associated TI component or service and is an unfair and deceptive business practice. TI is not responsible or liable for any such statements.

Buyer acknowledges and agrees that it is solely responsible for compliance with all legal, regulatory and safety-related requirements concerning its products, and any use of TI components in its applications, notwithstanding any applications-related information or support that may be provided by TI. Buyer represents and agrees that it has all the necessary expertise to create and implement safeguards which anticipate dangerous consequences of failures, monitor failures and their consequences, lessen the likelihood of failures that might cause harm and take appropriate remedial actions. Buyer will fully indemnify TI and its representatives against any damages arising out of the use of any TI components in safety-critical applications.

In some cases, TI components may be promoted specifically to facilitate safety-related applications. With such components, TI’s goal is to help enable customers to design and create their own end-product solutions that meet applicable functional safety standards and requirements. Nonetheless, such components are subject to these terms.

No TI components are authorized for use in FDA Class III (or similar life-critical medical equipment) unless authorized officers of the parties have executed a special agreement specifically governing such use.

Only those TI components which TI has specifically designated as military grade or “enhanced plastic” are designed and intended for use in military/aerospace applications or environments. Buyer acknowledges and agrees that any military or aerospace use of TI components which have ***not*** been so designated is solely at the Buyer's risk, and that Buyer is solely responsible for compliance with all legal and regulatory requirements in connection with such use.

TI has specifically designated certain components as meeting ISO/TS16949 requirements, mainly for automotive use. In any case of use of non-designated products, TI will not be responsible for any failure to meet ISO/TS16949.

Products		**Applications**	
Audio	www.ti.com/audio	Automotive and Transportation	www.ti.com/automotive
Amplifiers	amplifier.ti.com	Communications and Telecom	www.ti.com/communications
Data Converters	dataconverter.ti.com	Computers and Peripherals	www.ti.com/computers
DLP® Products	www.dlp.com	Consumer Electronics	www.ti.com/consumer-apps
DSP	dsp.ti.com	Energy and Lighting	www.ti.com/energy
Clocks and Timers	www.ti.com/clocks	Industrial	www.ti.com/industrial
Interface	interface.ti.com	Medical	www.ti.com/medical
Logic	logic.ti.com	Security	www.ti.com/security
Power Mgmt	power.ti.com	Space, Avionics and Defense	www.ti.com/space-avionics-defense
Microcontrollers	microcontroller.ti.com	Video and Imaging	www.ti.com/video
RFID	www.ti-rfid.com		
OMAP Applications Processors	www.ti.com/omap	**TI E2E Community**	e2e.ti.com
Wireless Connectivity	www.ti.com/wirelessconnectivity		

Mailing Address: Texas Instruments, Post Office Box 655303, Dallas, Texas 75265
Copyright © 2013, Texas Instruments Incorporated