LM2622 600kHz/1.3MHz Step-up PWM DC/DC Converter

Check for Samples: LM2622

FEATURES

- **1.6A, 0.2Ω, Internal Switch**
- **Operating Voltage as Low as 2.0V**
- **600kHz/1.3MHz Pin Selectable Frequency Operation**
- **Over Temperature Protection**
- **8-Lead VSSOP Package**

APPLICATIONS

- **TFT Bias Supplies**
- **Handheld Devices**
- **Portable Applications**
- **GSM/CDMA Phones**
- **Digital Cameras**

DESCRIPTION

The LM2622 is a step-up DC/DC converter with a 1.6A, 0.2Ω internal switch and pin selectable operating frequency. With the ability to convert 3.3V to multiple outputs of 8V, -8V, and 23V, the LM2622 is an ideal part for biasing TFT displays. The LM2622 can be operated at switching frequencies of 600kHz and 1.3MHz allowing for easy filtering and low noise. An external compensation pin gives the user flexibility in setting frequency compensation, which makes possible the use of small, low ESR ceramic capacitors at the output. The LM2622 is available in a low profile 8-lead VSSOP package.

Typical Application Circuit

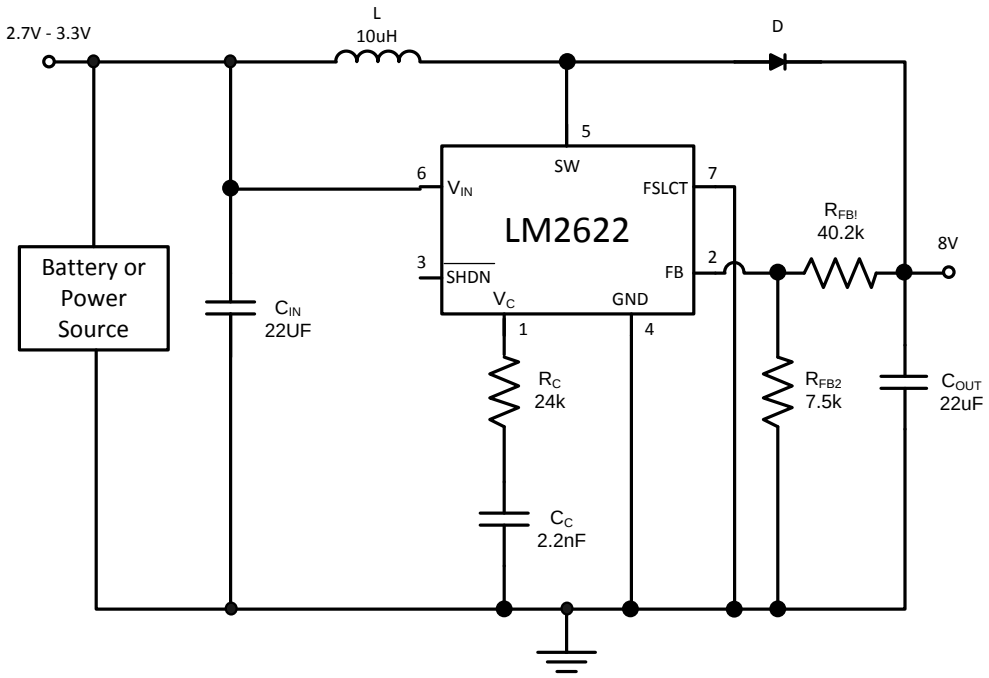

Figure 1. 600 kHz Operation

Please be aware that an important notice concerning availability, standard warranty, and use in critical applications of Texas Instruments semiconductor products and disclaimers thereto appears at the end of this data sheet.

All trademarks are the property of their respective owners.

PRODUCTION DATA information is current as of publication date. Products conform to specifications per the terms of the Texas Instruments standard warranty. Production processing does not necessarily include testing of all parameters.

Copyright © 2000–2013, Texas Instruments Incorporated

Connection Diagram

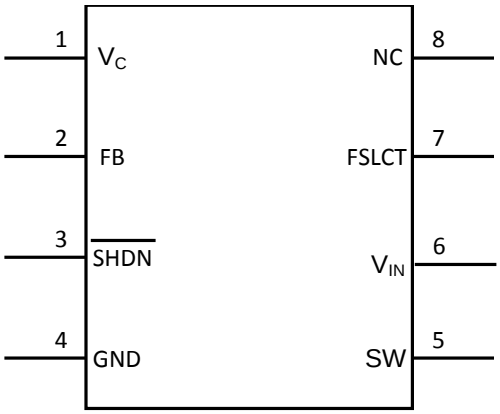

Figure 2. Top View
8-Lead Plastic VSSOP
See DGK Package

Pin Description

Pin	Name	Function
1	V_C	Compensation network connection. Connected to the output of the voltage error amplifier.
2	FB	Output voltage feedback input.
3	$\overline{SHDN}$	Shutdown control input, active low.
4	GND	Analog and power ground.
5	SW	Power switch input. Switch connected between SW pin and GND pin.
6	V_{IN}	Analog power input.
7	FSLCT	Switching frequency select input. V_{IN} = 1.3MHz. Ground = 600kHz.
8	NC	Connect to ground or leave open. Connect to GND pin directly beneath the device if possible. If other traces are in the way or it is otherwise not possible to directly connect it to GND leave this pin open and shield it from sources of EMI.

Copyright © 2000–2013, Texas Instruments Incorporated

Block Diagram

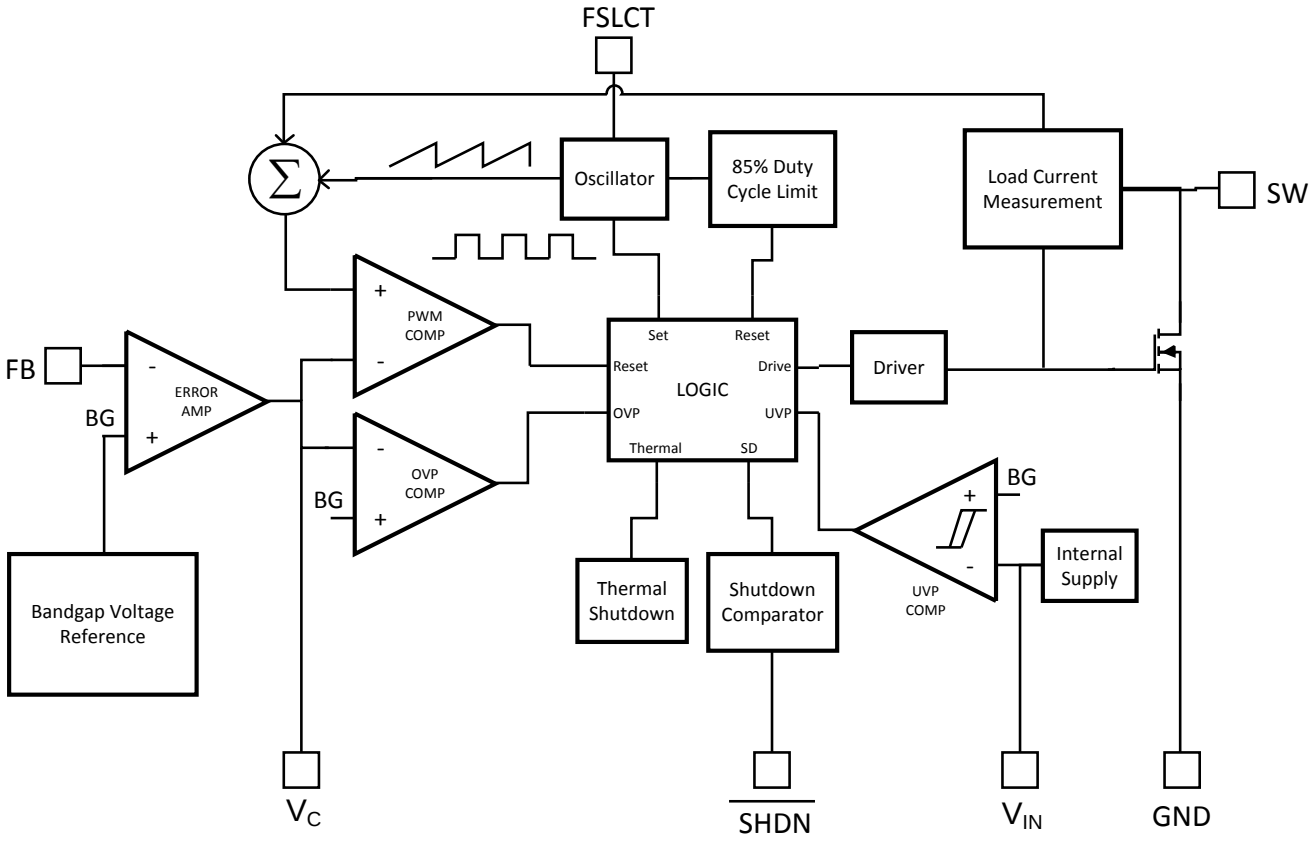

These devices have limited built-in ESD protection. The leads should be shorted together or the device placed in conductive foam during storage or handling to prevent electrostatic damage to the MOS gates.

Absolute Maximum Ratings (1)(2)

V_{IN}	12V
SW Voltage	18V
FB Voltage	7V
V_C Voltage	7V
$\overline{SHDN}$ Voltage	7V
FSLCT	12V
Maximum Junction Temperature	150°C
Power Dissipation (3)	Internally Limited
Lead Temperature	300°C
Vapor Phase (60 sec.)	215°C
Infrared (15 sec.)	220°C
ESD Susceptibility (4)	
Human Body Model	2kV
Machine Model	200V

(1) Absolute maximum ratings are limits beyond which damage to the device may occur. Operating Ratings are conditions for which the device is intended to be functional, but device parameter specifications may not be ensured. For ensured specifications and test conditions, see the Electrical Characteristics.
(2) If Military/Aerospace specified devices are required, please contact the Texas Instruments Sales Office/ Distributors for availability and specifications.
(3) The maximum allowable power dissipation is a function of the maximum junction temperature, T_J(MAX), the junction-to-ambient thermal resistance, θ_{JA}, and the ambient temperature, T_A. See the Electrical Characteristics table for the thermal resistance of various layouts. The maximum allowable power dissipation at any ambient temperature is calculated using: P_D (MAX) = ($T_{J(MAX)}$ − T_A)/θ_{JA}. Exceeding the maximum allowable power dissipation will cause excessive die temperature, and the regulator will go into thermal shutdown.
(4) The human body model is a 100 pF capacitor discharged through a 1.5kΩ resistor into each pin. The machine model is a 200pF capacitor discharged directly into each pin.

Operating Conditions

Operating Junction Temperature Range (1)	−40°C to +125°C
Storage Temperature	−65°C to +150°C
Supply Voltage	2V to 12V

(1) All limits specified at room temperature (standard typeface) and at temperature extremes (bold typeface). All room temperature limits are 100% production tested. All limits at temperature extremes are specified via correlation using standard Statistical Quality Control (SQC) methods. All limits are used to calculate Average Outgoing Quality Level (AOQL).

Electrical Characteristics

Specifications in standard type face are for T_J = 25°C and those with **boldface type** apply over the full **Operating Temperature Range** (T_J = −40°C to +125°C)Unless otherwise specified. V_{IN} =2.0V and I_L = 0A, unless otherwise specified.

Symbol	Parameter	Conditions	Min (1)	Typ (2)	Max (1)	Units
I_Q	Quiescent Current	FB = 0V (Not Switching)		1.3	**2.0**	mA
		$V_{\overline{SHDN}}$ = 0V		5	**10**	µA
V_{FB}	Feedback Voltage		**1.2285**	1.26	**1.2915**	V
I_{CL} (3)	Switch Current Limit	V_{IN} = 2.7V (4)	**1.0**	1.65	**2.3**	A
$\Delta V_O/\Delta I_{LOAD}$	Load Regulation	V_{IN} = 3.3V		6.7		mV/A
$\%V_{FB}/\Delta V_{IN}$	Feedback Voltage Line Regulation	2.0V ≤ V_{IN} ≤ 12.0V		0.013	**0.1**	%/V
I_B	FB Pin Bias Current (5)			0.5	**20**	nA

(1) All limits specified at room temperature (standard typeface) and at temperature extremes (bold typeface). All room temperature limits are 100% production tested. All limits at temperature extremes are specified via correlation using standard Statistical Quality Control (SQC) methods. All limits are used to calculate Average Outgoing Quality Level (AOQL).
(2) Typical numbers are at 25°C and represent the most likely norm.
(3) Duty cycle affects current limit due to ramp generator.
(4) Current limit at 0% duty cycle. See Typical Performance Characteristics section for Switch Current Limit vs. V_{IN}
(5) Bias current flows into FB pin.

Copyright © 2000–2013, Texas Instruments Incorporated

Electrical Characteristics (continued)

Specifications in standard type face are for T_J = 25°C and those with **boldface type** apply over the full **Operating Temperature Range** (T_J = −40°C to +125°C)Unless otherwise specified. V_{IN} =2.0V and I_L = 0A, unless otherwise specified.

Symbol	Parameter	Conditions	Min (1)	Typ (2)	Max (1)	Units
V_{IN}	Input Voltage Range		**2**		**12**	V
g_m	Error Amp Transconductance	ΔI = 5μA	**40**	135	**290**	μmho
A_V	Error Amp Voltage Gain			135		V/V
D_{MAX}	Maximum Duty Cycle		**78**	85		%
f_S	Switching Frequency	FSLCT = Ground	**480**	600	**720**	kHz
		FSLCT = V_{IN}	**1**	1.25	**1.5**	MHz
$I_{\overline{SHDN}}$	Shutdown Pin Current	$V_{\overline{SHDN}}$ = V_{IN}		0.01	**0.1**	μA
		$V_{\overline{SHDN}}$ = 0V		−0.5	**-1**	
I_L	Switch Leakage Current	V_{SW} = 18V		0.01	**3**	μA
R_{DSON}	Switch R_{DSON}	V_{IN} = 2.7V, I_{SW} = 1A		0.2	**0.4**	Ω
Th_{SHDN}	$\overline{SHDN}$ Threshold	Output High	**0.9**	0.6		V
		Output Low		0.6	**0.3**	V
UVP	On Threshold		**1.8**	1.92	**2.0**	V
	Off Threshold		**1.7**	1.82	**1.9**	V
θ_{JA}	Thermal Resistance	Junction to Ambient (6)		235		°C/W
		Junction to Ambient (7)		225		
		Junction to Ambient (8)		220		
		Junction to Ambient (9)		200		
		Junction to Ambient (10)		195		

(6) Junction to ambient thermal resistance (no external heat sink) for the VSSOP package with minimal trace widths (0.010 inches) from the pins to the circuit. See "Scenario 'A'" in the Power Dissipation section.
(7) Junction to ambient thermal resistance for the VSSOP package with minimal trace widths (0.010 inches) from the pins to the circuit and approximately 0.0191 sq. in. of copper heat sinking. See "Scenario 'B'" in the Power Dissipation section.
(8) Junction to ambient thermal resistance for the VSSOP package with minimal trace widths (0.010 inches) from the pins to the circuit and approximately 0.0465 sq. in. of copper heat sinking. See "Scenario 'C'" in the Power Dissipation section.
(9) Junction to ambient thermal resistance for the VSSOP package with minimal trace widths (0.010 inches) from the pins to the circuit and approximately 0.2523 sq. in. of copper heat sinking. See "Scenario 'D'" in the Power Dissipation section.
(10) Junction to ambient thermal resistance for the VSSOP package with minimal trace widths (0.010 inches) from the pins to the circuit and approximately 0.0098 sq. in. of copper heat sinking on the top layer and 0.0760 sq. in. of copper heat sinking on the bottom layer, with three 0.020 in. vias connecting the planes. See "Scenario 'E'" in the Power Dissipation section.

Copyright © 2000–2013, Texas Instruments Incorporated

Typical Performance Characteristics

Efficiency vs. Load Current (V_{OUT} = 8V, f_S = 600 kHz)

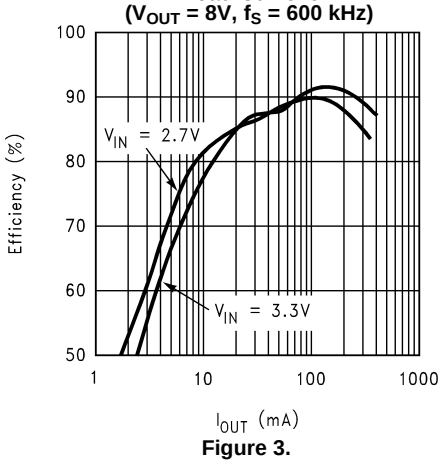

Figure 3.

Efficiency vs. Load Current (V_{OUT} = 8V, f_S = 1.3 MHz)

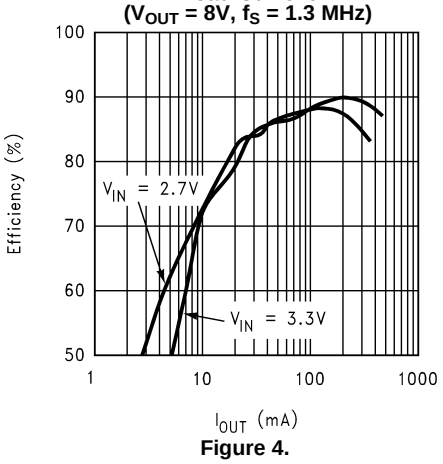

Figure 4.

Switch Current Limit vs. Temperature (V_{IN} = 3.3V, V_{OUT} = 8V)

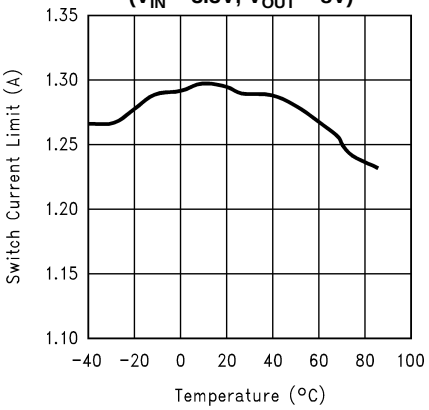

Figure 5.

Switch Current Limit vs. V_{IN}

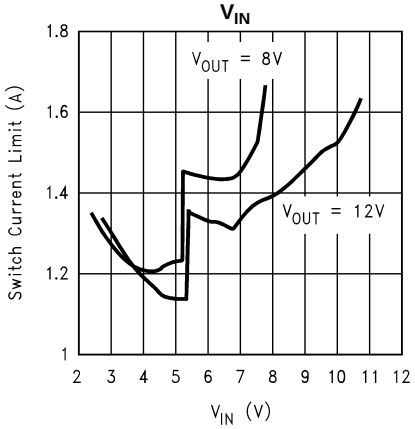

Figure 6.

R_{DSON} vs. V_{IN} (I_{SW} = 1A)

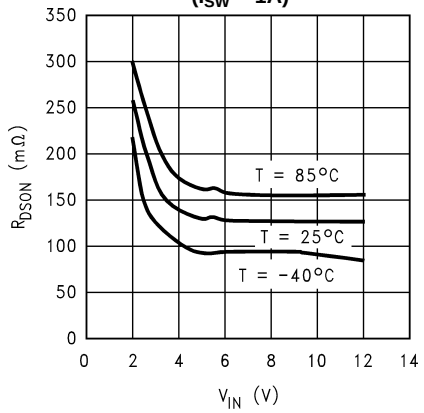

Figure 7.

I_Q vs. V_{IN} (600 kHz, not switching)

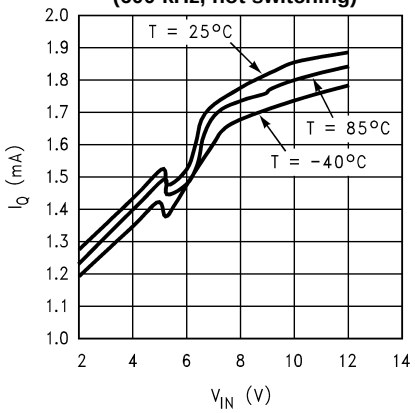

Figure 8.

Copyright © 2000–2013, Texas Instruments Incorporated

Typical Performance Characteristics (continued)

I_Q vs. V_{IN} (600 kHz, switching)

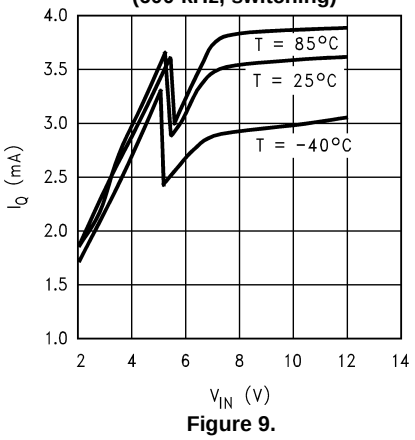

Figure 9.

I_Q vs. V_{IN} (1.3 MHz, not switching)

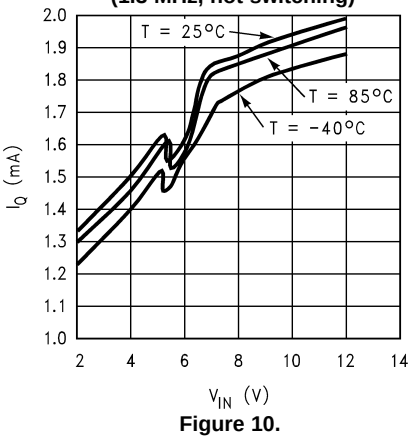

Figure 10.

I_Q vs. V_{IN} (1.3 MHz, switching)

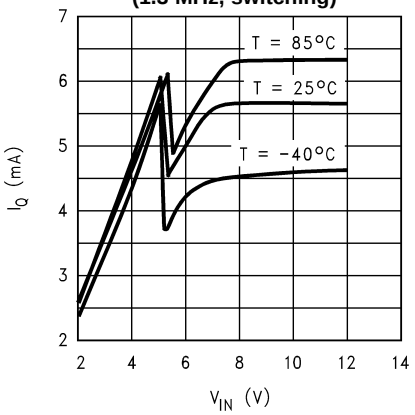

Figure 11.

I_Q vs. V_{IN} (In shutdown)

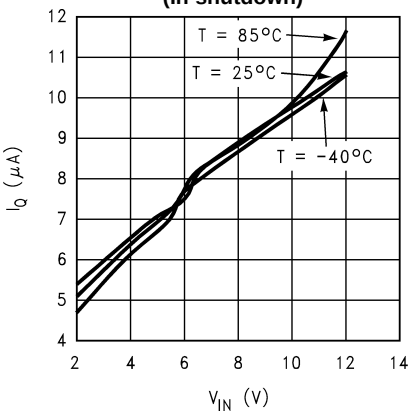

Figure 12.

Frequency vs. V_{IN} (600 kHz)

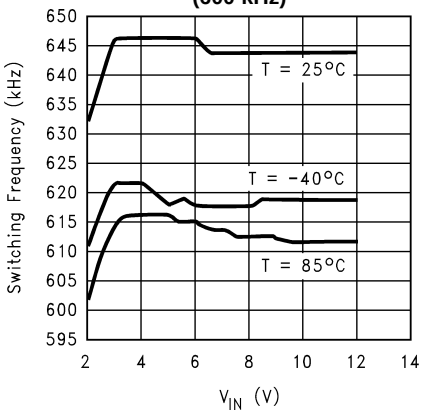

Figure 13.

Frequency vs. V_{IN} (1.3 MHz)

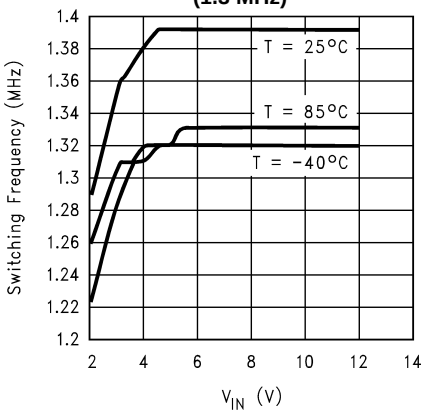

Figure 14.

Copyright © 2000–2013, Texas Instruments Incorporated

Typical Performance Characteristics (continued)

Load Transient Response (600 kHz operation)

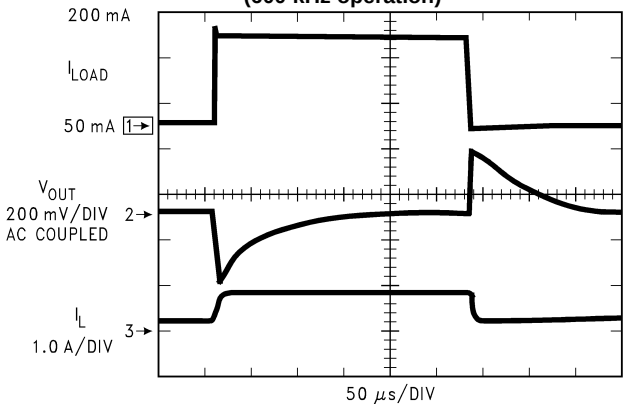

Test circuit is shown in Figure 20.

Figure 15.

Load Transient Response (1.3 MHz operation)

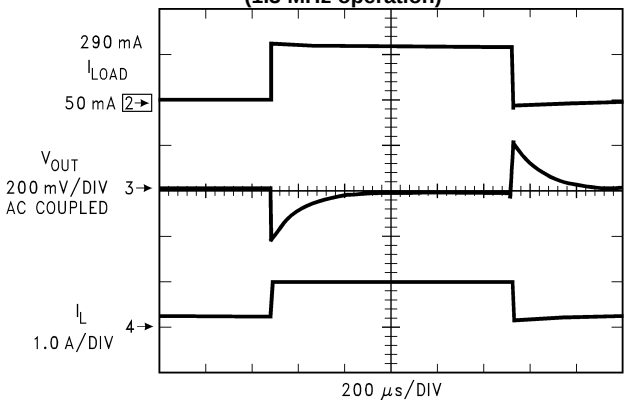

Test circuit is shown in Figure 21

Figure 16.

Copyright © 2000–2013, Texas Instruments Incorporated

OPERATION

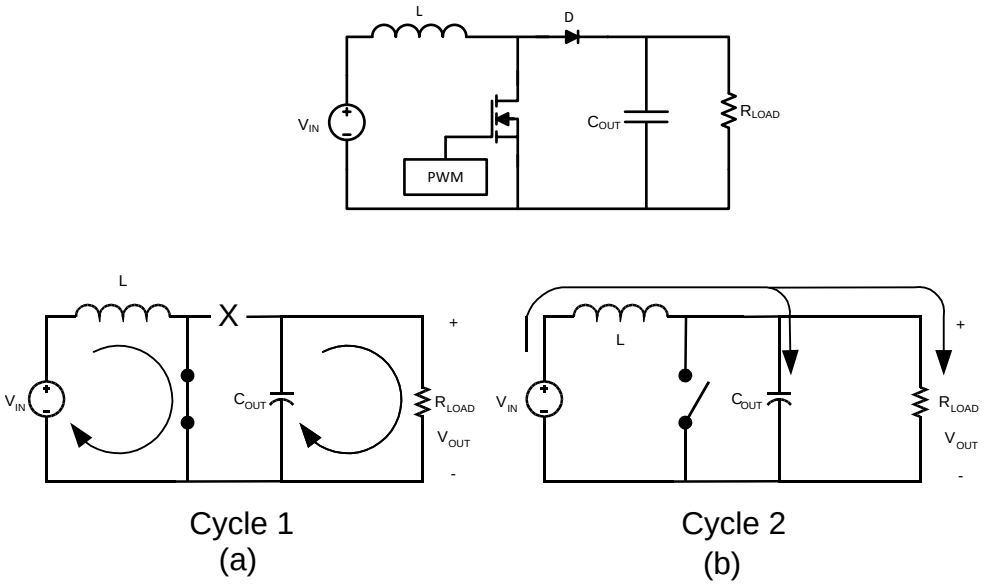

(a) First Cycle of Operation
(b) Second Cycle Of Operation

Figure 17. Simplified Boost Converter Diagram

CONTINUOUS CONDUCTION MODE

The LM2622 is a current-mode, PWM boost regulator. A boost regulator steps the input voltage up to a higher output voltage. In continuous conduction mode (when the inductor current never reaches zero at steady state), the boost regulator operates in two cycles.

In the first cycle of operation, shown in Figure 17 (a), the transistor is closed and the diode is reverse biased. Energy is collected in the inductor and the load current is supplied by C_{OUT}.

The second cycle is shown in Figure 17 (b). During this cycle, the transistor is open and the diode is forward biased. The energy stored in the inductor is transferred to the load and output capacitor.

The ratio of these two cycles determines the output voltage. The output voltage is defined approximately as:

$$V_{OUT} = \frac{V_{IN}}{1-D}, \quad D' = (1-D) = \frac{V_{IN}}{V_{OUT}} \tag{1}$$

where

- D is the duty cycle of the switch
- D and D′ will be required for design calculations

SETTING THE OUTPUT VOLTAGE

The output voltage is set using the feedback pin and a resistor divider connected to the output as shown in the typical operating circuit. The feedback pin voltage is 1.26V, so the ratio of the feedback resistors sets the output voltage according to the following equation:

$$R_{FB1} = R_{FB2} \times \frac{V_{OUT} - 1.26}{1.26} \ \Omega \tag{2}$$

INTRODUCTION TO COMPENSATION

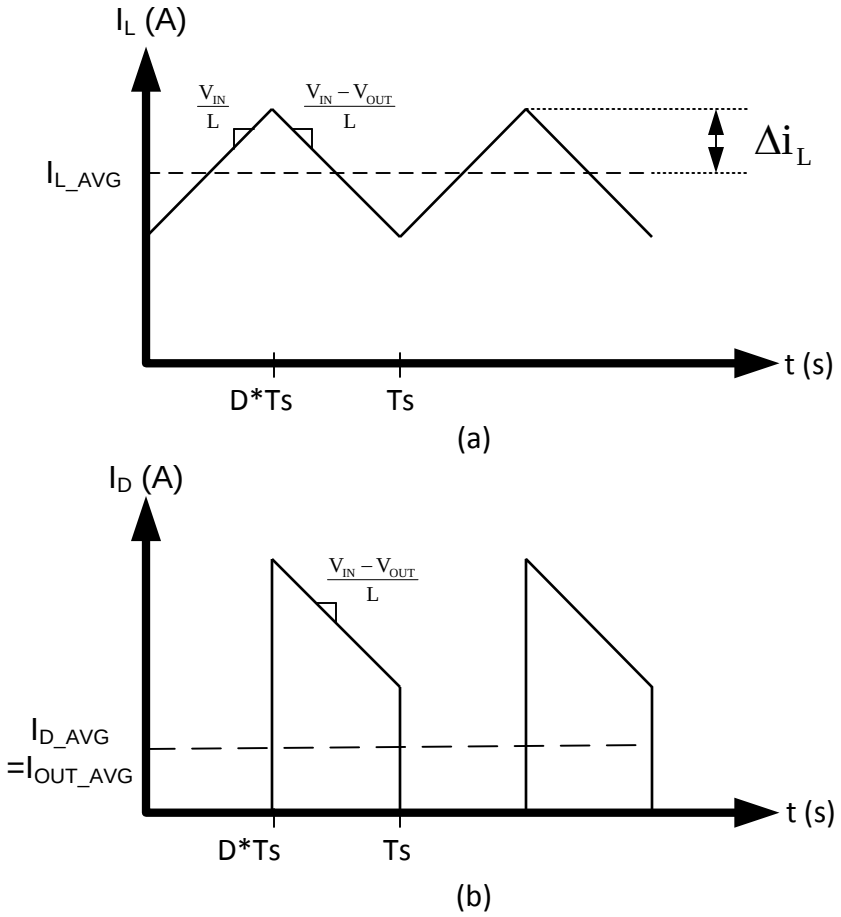

(a) Inductor current
(b) Diode current

Figure 18.

The LM2622 is a current mode PWM boost converter. The signal flow of this control scheme has two feedback loops, one that senses switch current and one that senses output voltage.

To keep a current programmed control converter stable above duty cycles of 50%, the inductor must meet certain criteria. The inductor, along with input and output voltage, will determine the slope of the current through the inductor (see Figure 18 (a)). If the slope of the inductor current is too great, the circuit will be unstable above duty cycles of 50%. A 10µH inductor is recommended for most 600 kHz applications, while a 4.7µH inductor may be used for most 1.25 MHz applications. If the duty cycle is approaching the maximum of 85%, it may be necessary to increase the inductance by as much as 2X. See INDUCTOR AND DIODE SELECTION for more detailed inductor sizing.

The LM2622 provides a compensation pin (V_C) to customize the voltage loop feedback. It is recommended that a series combination of R_C and C_C be used for the compensation network, as shown in the typical application circuit. For any given application, there exists a unique combination of R_C and C_C that will optimize the performance of the LM2622 circuit in terms of its transient response. The series combination of R_C and C_C introduces a pole-zero pair according to the following equations:

Copyright © 2000–2013, Texas Instruments Incorporated

$$f_{ZC} = \frac{1}{2\pi R_C C_C} \text{ Hz}$$

$$f_{PC} = \frac{1}{2\pi (R_C + R_O) C_C} \text{ Hz} \quad (3)$$

where

- R_O is the output impedance of the error amplifier, approximately 1MegΩ (4)

For most applications, performance can be optimized by choosing values within the range 5kΩ ≤ R_C ≤ 20kΩ (R_C can be up to 200kΩ if C_{C2} is used, see HIGH OUTPUT CAPACITOR ESR COMPENSATION) and 680pF ≤ C_C ≤ 4.7nF. Refer to the Application Information section for recommended values for specific circuits and conditions. Refer to the COMPENSATION section for other design requirement.

COMPENSATION

This section will present a general design procedure to help insure a stable and operational circuit. The designs in this datasheet are optimized for particular requirements. If different conversions are required, some of the components may need to be changed to ensure stability. Below is a set of general guidelines in designing a stable circuit for continuous conduction operation (loads greater than approximately 75mA), in most all cases this will provide for stability during discontinuous operation as well. The power components and their effects will be determined first, then the compensation components will be chosen to produce stability.

INDUCTOR AND DIODE SELECTION

Although the inductor sizes mentioned earlier are fine for most applications, a more exact value can be calculated. To ensure stability at duty cycles above 50%, the inductor must have some minimum value determined by the minimum input voltage and the maximum output voltage. This equation is:

$$L > \frac{V_{IN} R_{DSON}}{0.144 \text{ fs}} \left[\frac{\left(\frac{D}{D'}\right)^2 - 1}{\left(\frac{D}{D'}\right) + 1} \right] \text{ (in H)}$$

where

- fs is the switching frequency
- D is the duty cycle
- R_{DSON} is the ON resistance of the internal switch taken from the graph "R_{DSON} vs. V_{IN}" in the Typical Performance Characteristics section (5)

This equation is only good for duty cycles greater than 50% (D>0.5), for duty cycles less than 50% the recommended values may be used. The corresponding inductor current ripple as shown in Figure 18 (a) is given by:

$$\Delta i_L = \frac{V_{IN} D}{2Lfs} \text{ (in Amps)} \quad (6)$$

The inductor ripple current is important for a few reasons. One reason is because the peak switch current will be the average inductor current (input current or I_{LOAD}/D') plus Δi_L. As a side note, discontinuous operation occurs when the inductor current falls to zero during a switching cycle, or Δi_L is greater than the average inductor current. Therefore, continuous conduction mode occurs when Δi_L is less than the average inductor current. Care must be taken to make sure that the switch will not reach its current limit during normal operation. The inductor must also be sized accordingly. It should have a saturation current rating higher than the peak inductor current expected. The output voltage ripple is also affected by the total ripple current.

The output diode for a boost regulator must be chosen correctly depending on the output voltage and the output current. The typical current waveform for the diode in continuous conduction mode is shown in Figure 18 (b). The diode must be rated for a reverse voltage equal to or greater than the output voltage used. The average current rating must be greater than the maximum load current expected, and the peak current rating must be greater than the peak inductor current. During short circuit testing, or if short circuit conditions are possible in the application, the diode current rating must exceed the switch current limit. Using Schottky diodes with lower forward voltage drop will decrease power dissipation and increase efficiency.

Copyright © 2000–2013, Texas Instruments Incorporated

DC GAIN AND OPEN-LOOP GAIN

Since the control stage of the converter forms a complete feedback loop with the power components, it forms a closed-loop system that must be stabilized to avoid positive feedback and instability. A value for open-loop DC gain will be required, from which you can calculate, or place, poles and zeros to determine the crossover frequency and the phase margin. A high phase margin (greater than 45°) is desired for the best stability and transient response. For the purpose of stabilizing the LM2622, choosing a crossover point well below where the right half plane zero is located will ensure sufficient phase margin. A discussion of the right half plane zero and checking the crossover using the DC gain will follow.

INPUT AND OUTPUT CAPACITOR SELECTION

The switching action of a boost regulator causes a triangular voltage waveform at the input. A capacitor is required to reduce the input ripple and noise for proper operation of the regulator. The size used is dependant on the application and board layout. If the regulator will be loaded uniformly, with very little load changes, and at lower current outputs, the input capacitor size can often be reduced. The size can also be reduced if the input of the regulator is very close to the source output. The size will generally need to be larger for applications where the regulator is supplying nearly the maximum rated output or if large load steps are expected. A minimum value of 10µF should be used for the less stressful condtions while a 22µF to 47µF capacitor may be required for higher power and dynamic loads. Larger values and/or lower ESR may be needed if the application requires very low ripple on the input source voltage.

The choice of output capacitors is also somewhat arbitrary and depends on the design requirements for output voltage ripple. It is recommended that low ESR (Equivalent Series Resistance, denoted R_{ESR}) capacitors be used such as ceramic, polymer electrolytic, or low ESR tantalum. Higher ESR capacitors may be used but will require more compensation which will be explained later on in the section. The ESR is also important because it determines the peak to peak output voltage ripple according to the approximate equation:

$$\Delta V_{OUT} \cong 2\Delta i_L R_{ESR} \text{ (in Volts)} \tag{7}$$

A minimum value of 10µF is recommended and may be increased to a larger value. After choosing the output capacitor you can determine a pole-zero pair introduced into the control loop by the following equations:

$$f_{P1} = \frac{1}{2\pi(R_{ESR} + R_L)C_{OUT}} \text{ (in Hz)} \tag{8}$$

where

- R_L is the minimum load resistance corresponding to the maximum load current

$$f_{Z1} = \frac{1}{2\pi R_{ESR} C_{OUT}} \text{ (in Hz)} \tag{9}$$

The zero created by the ESR of the output capacitor is generally very high frequency if the ESR is small. If low ESR capacitors are used it can be neglected. If higher ESR capacitors are used see the HIGH OUTPUT CAPACITOR ESR COMPENSATION section.

RIGHT HALF PLANE ZERO

A current mode control boost regulator has an inherent right half plane zero (RHP zero). This zero has the effect of a zero in the gain plot, causing an imposed +20dB/decade on the rolloff, but has the effect of a pole in the phase, subtracting another 90° in the phase plot. This can cause undesirable effects if the control loop is influenced by this zero. To ensure the RHP zero does not cause instability issues, the control loop should be designed to have a bandwidth of less than ½ the frequency of the RHP zero. This zero occurs at a frequency of:

$$\text{RHPzero} = \frac{V_{OUT}(D')^2}{2\pi I_{LOAD} L} \text{ (in Hz)} \tag{10}$$

where

- I_{LOAD} is the maximum load current

Copyright © 2000–2013, Texas Instruments Incorporated

SELECTING THE COMPENSATION COMPONENTS

The first step in selecting the compensation components R_C and C_C is to set a dominant low frequency pole in the control loop. Simply choose values for R_C and C_C within the ranges given in the INTRODUCTION TO COMPENSATION section to set this pole in the area of 10Hz to 500Hz. The frequency of the pole created is determined by the equation:

$$f_{PC} = \frac{1}{2\pi(R_C + R_O)C_C} \text{ (in Hz)} \quad (11)$$

where

- R_O is the output impedance of the error amplifier, approximately 1MegΩ

Since R_C is generally much less than R_O, it does not have much effect on the above equation and can be neglected until a value is chosen to set the zero f_{ZC}. f_{ZC} is created to cancel out the pole created by the output capacitor, f_{P1}. The output capacitor pole will shift with different load currents as shown by the equation, so setting the zero is not exact. Determine the range of f_{P1} over the expected loads and then set the zero f_{ZC} to a point approximately in the middle. The frequency of this zero is determined by:

$$f_{ZC} = \frac{1}{2\pi C_C R_C} \text{ (in Hz)} \quad (12)$$

Now R_C can be chosen with the selected value for C_C. Check to make sure that the pole f_{PC} is still in the 10Hz to 500Hz range, change each value slightly if needed to ensure both component values are in the recommended range. After checking the design at the end of this section, these values can be changed a little more to optimize performance if desired. This is best done in the lab on a bench, checking the load step response with different values until the ringing and overshoot on the output voltage at the edge of the load steps is minimal. This should produce a stable, high performance circuit. For improved transient response, higher values of R_C should be chosen. This will improve the overall bandwidth which makes the regulator respond more quickly to transients. If more detail is required, or the most optimal performance is desired, refer to a more in depth discussion of compensating current mode DC/DC switching regulators.

HIGH OUTPUT CAPACITOR ESR COMPENSATION

When using an output capacitor with a high ESR value, or just to improve the overall phase margin of the control loop, another pole may be introduced to cancel the zero created by the ESR. This is accomplished by adding another capacitor, C_{C2}, directly from the compensation pin V_C to ground, in parallel with the series combination of R_C and C_C. The pole should be placed at the same frequency as f_{Z1}, the ESR zero. The equation for this pole follows:

$$f_{PC2} = \frac{1}{2\pi C_{C2}(R_C // R_O)} \text{ (in Hz)} \quad (13)$$

To ensure this equation is valid, and that C_{C2} can be used without negatively impacting the effects of R_C and C_C, f_{PC2} must be greater than $10f_{ZC}$.

CHECKING THE DESIGN

The final step is to check the design. This is to ensure a bandwidth of ½ or less of the frequency of the RHP zero. This is done by calculating the open-loop DC gain, A_{DC}. After this value is known, you can calculate the crossover visually by placing a −20dB/decade slope at each pole, and a +20dB/decade slope for each zero. The point at which the gain plot crosses unity gain, or 0dB, is the crossover frequency. If the crossover frequency is less than ½ the RHP zero, the phase margin should be high enough for stability. The phase margin can also be improved by adding C_{C2} as discussed earlier in the section. The equation for A_{DC} is given below with additional equations required for the calculation:

$$A_{DC(DB)} = 20\log_{10}\left\langle \left(\frac{R_{FB2}}{R_{FB1} + R_{FB2}}\right) \frac{g_m R_O D'}{R_{DSON}} \{[(\omega c Leff) // R_L] // R_L\} \right\rangle \text{ (in dB)} \quad (14)$$

where

- R_L is the minimum load resistance
- g_m is the error amplifier transconductance found in the Electrical Characteristics table

$$\omega c \cong \frac{2fs}{nD'} \text{ (in rad/s)} \quad (15)$$

Copyright © 2000–2013, Texas Instruments Incorporated

$$Leff = \frac{L}{(D')^2} \quad (16)$$

$$n = 1 + \frac{2mc}{m1} \text{ (no unit)} \quad (17)$$

$$mc \cong 0.072fs \text{ (in V/s)} \quad (18)$$

$$m1 \cong \frac{V_{IN}R_{DSON}}{L} \text{ (in V/s)}$$

where

- V_{IN} is the minimum input voltage
- R_{DSON} is the value chosen from the graph "R_{DSON} vs. V_{IN} " in the Typical Performance Characteristics section (19)

LAYOUT CONSIDERATIONS

The input bypass capacitor C_{IN}, as shown in the typical operating circuit, must be placed close to the IC. This will reduce copper trace resistance which effects input voltage ripple of the IC. For additional input voltage filtering, a 100nF bypass capacitor can be placed in parallel with C_{IN}, close to the V_{IN} pin, to shunt any high frequency noise to ground. The output capacitor, C_{OUT}, should also be placed close to the IC. Any copper trace connections for the C_{OUT} capacitor can increase the series resistance, which directly effects output voltage ripple. The feedback network, resistors R_{FB1} and R_{FB2}, should be kept close to the FB pin, and away from the inductor, to minimize copper trace connections that can inject noise into the system. Trace connections made to the inductor and schottky diode should be minimized to reduce power dissipation and increase overall efficiency. For more detail on switching power supply layout considerations see Application Note AN-1149: *Layout Guidelines for Switching Power Supplies* (SNVA021).

Copyright © 2000–2013, Texas Instruments Incorporated

Application Information

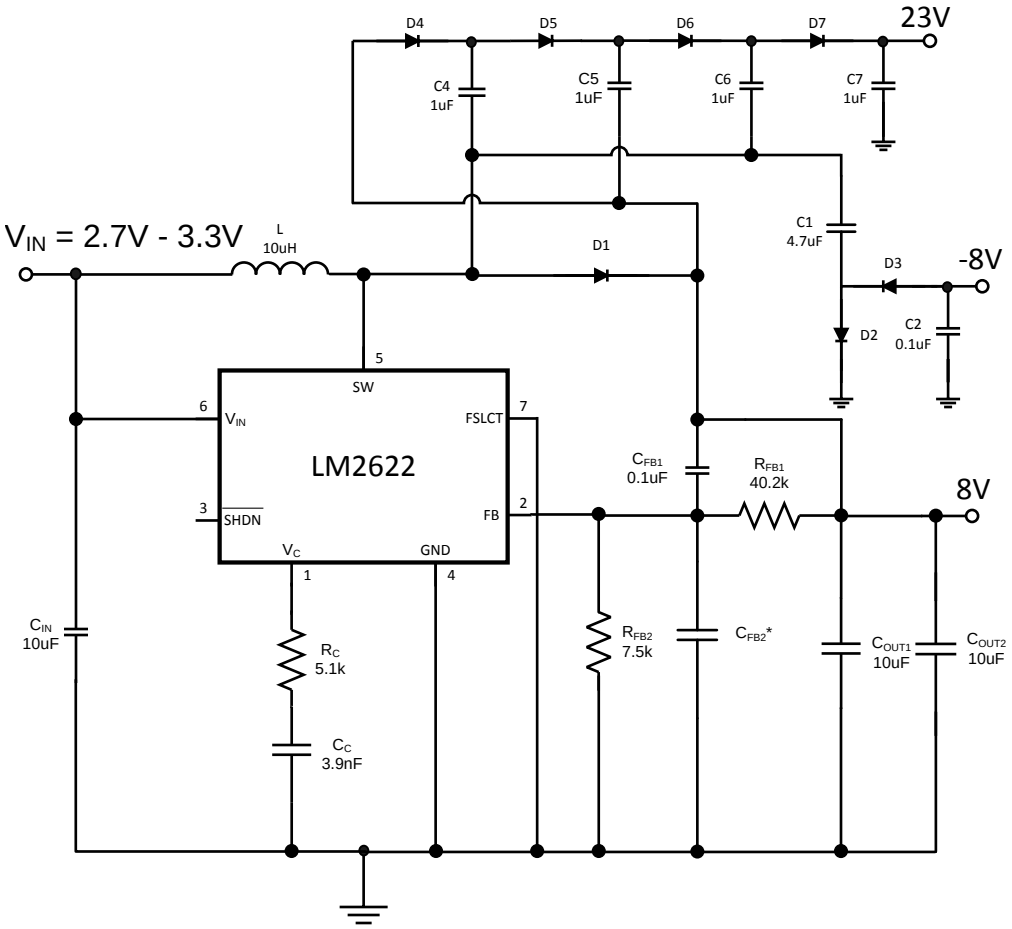

Figure 19. Triple Output TFT Bias (600 kHz operation)

TRIPLE OUTPUT TFT BIAS

The circuit in Figure 19 shows how the LM2622 can be configured to provide outputs of 8V, −8V, and 23V, convenient for biasing TFT displays. The 8V output is regulated, while the −8V and 23V outputs are unregulated.

The 8V output is generated by a typical boost topology. The basic operation of the boost converter is described in the OPERATION section. The output voltage is set with R_{FB1} and R_{FB2} by:

$$R_{FB1} = R_{FB2} \frac{V_{OUT} - 1.26}{1.26} \Omega \quad (20)$$

C_{FB} is placed across R_{FB1} to act as a pseudo soft-start. The compensation network of R_C and C_C are chosen to optimally stabilize the converter. The inductor also affects the stability. When operating at 600 kHz, a 10uH inductor is recommended to insure the converter is stable at duty cycles greater than 50%. Refer to the COMPENSATION section for more information.

The -8V output is derived from a diode inverter. During the second cycle, when the transistor is open, D2 conducts and C1 charges to 8V minus a diode drop (≅0.4V if using a Schottky). When the transistor opens in the first cycle, D3 conducts and C1's polarity is reversed with respect to the output at C2, producing -8V.

The 23V output is realized with a series of capacitor charge pumps. It consists of four stages: the first stage includes C4, D4, and the LM2622 switch; the second stage uses C5, D5, and D1; the third stage includes C6, D6, and the LM2622 switch; the final stage is C7 and D7. In the first stage, C4 charges to 8V when the LM2622 switch is closed, which causes D5 to conduct when the switch is open. In the second stage, the voltage across C5 is VC4 + VD1 - VD5 = VC4 ≅ 8V when the switch is open. However, because C5 is referenced to the 8V

Copyright © 2000–2013, Texas Instruments Incorporated

output, the voltage at C5 is 16V when referenced to ground. In the third stage, the 16V at C5 appears across C6 when the switch is closed. When the switch opens, C6 is referenced to the 8V output minus a diode drop, which raises the voltage at C6 with respect to ground to about 24V. Hence, in the fourth stage, C7 is charged to 24V when the switch is open. From the first stage to the last, there are three diode drops that make the output voltage closer to 24 - 3xVDIODE (about 22.8V if a 0.4V forward drop is assumed).

Table 1. Components For Circuits in Figure 19

Component	600 kHz	1.3 MHz
L	10µH	4.7µH
COUT1	10µF	22µF
COUT2	10µF	NOT USED
CC	3.9nF	1.5nF
CFB1	0.1µF	15nF
CFB2	NOT USED	560pF
CIN	10µF	22µF
C1	4.7µF	4.7µF
C2	0.1µF	0.1µF
C4	1µF	1µF
C5	1µF	1µF
C6	1µF	1µF
C7	1µF	1µF
RFB1	40.2kΩ	91kΩ
RFB2	7.5kΩ	18kΩ
RC	5.1kΩ	10kΩ
D1	MBRM140T3	MBRM140T3
D2	BAT54S	BAT54S
D3		
D4	BAT54S	BAT54S
D5		
D6	BAT54S	BAT54S
D7		

Copyright © 2000–2013, Texas Instruments Incorporated

600 KHZ OPERATION

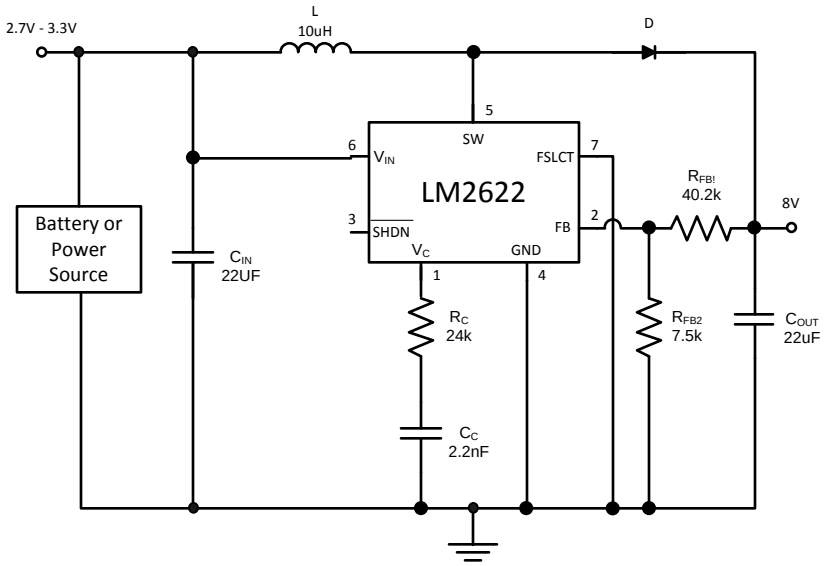

Figure 20. 600 kHz operation

1.3 MHZ OPERATION

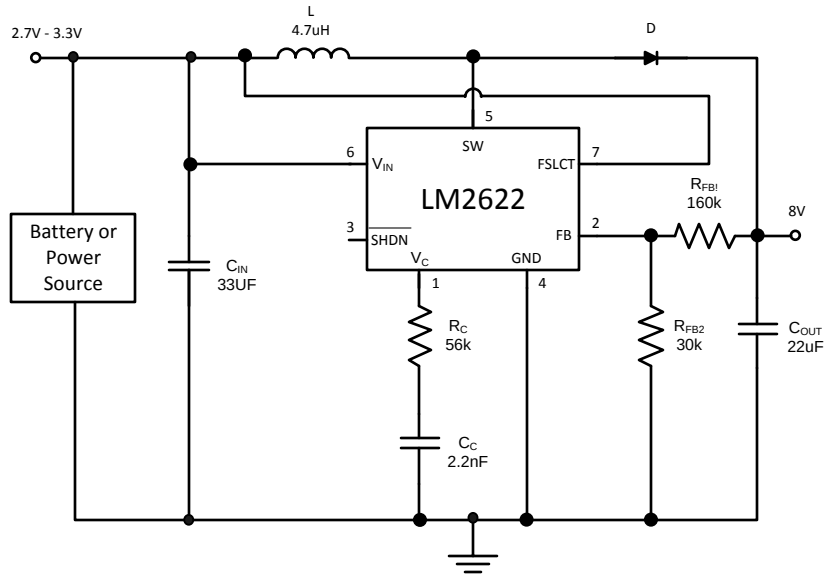

Figure 21. 1.3 MHz operation

POWER DISSIPATION

The output power of the LM2622 is limited by its maximum power dissipation. The maximum power dissipation is determined by the formula

$$P_D = (T_{jmax} - T_A)/\theta_{JA} \quad (21)$$

where

- T_{jmax} is the maximum specidfied junction temperature (125°C)
- T_A is the ambient temperature
- θ_{JA} is the thermal resistance of the package

θ_{JA} is dependant on the layout of the board as shown below.

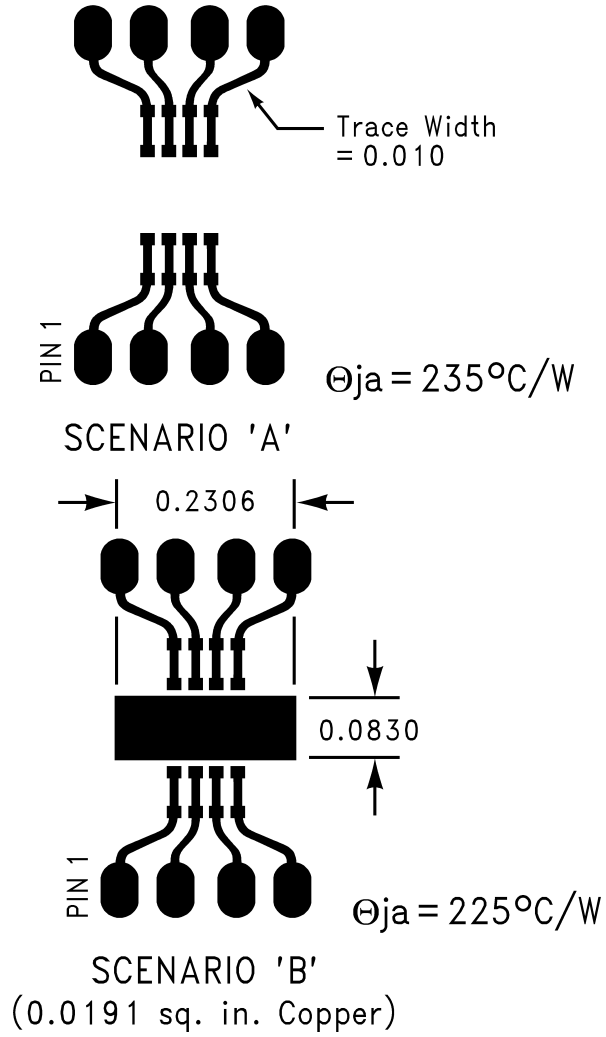

Copyright © 2000–2013, Texas Instruments Incorporated

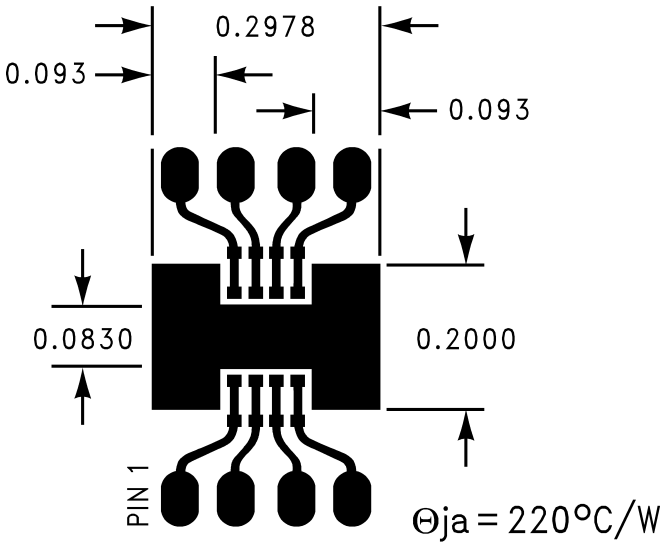

SCENARIO 'C'
(0.0465 sq. in. Copper)

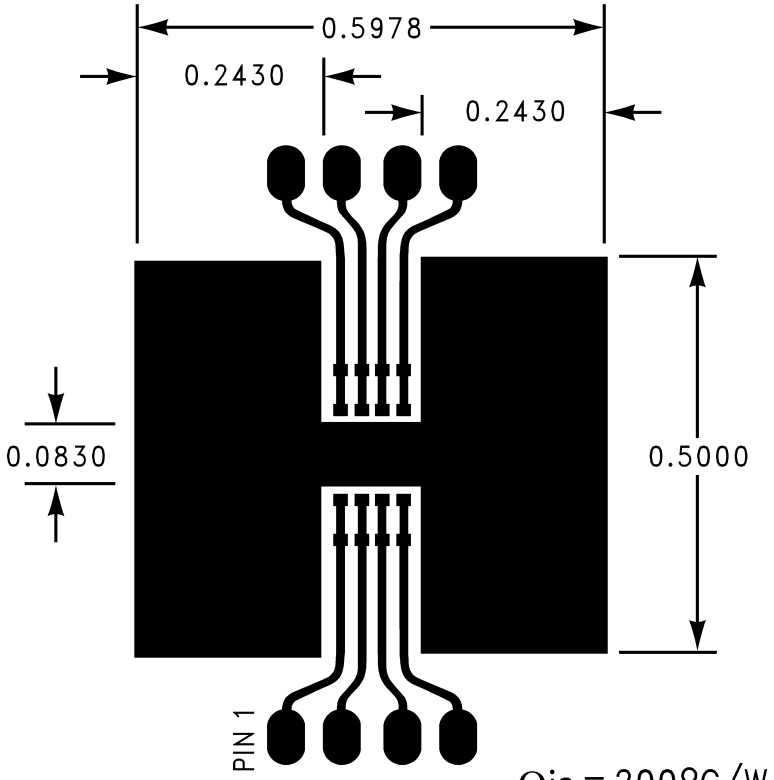

SCENARIO 'D'
(0.2523 sq. in. Copper)

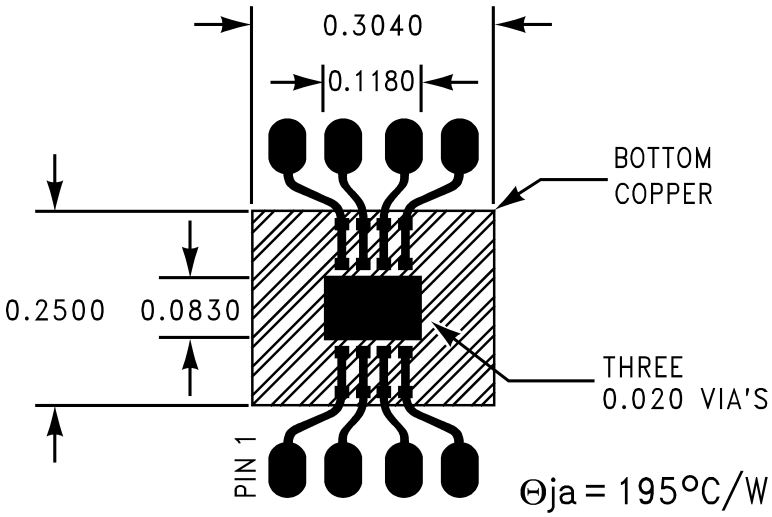

SCENARIO 'E'
(0.0098 sq. in. Copper [TOP])
(0.0760 sq. in. Copper [BOTTOM])

Copyright © 2000–2013, Texas Instruments Incorporated

REVISION HISTORY

Changes from Revision D (March 2013) to Revision E	Page
• Changed layout of National Data Sheet to TI format	20

Copyright © 2000–2013, Texas Instruments Incorporated

PACKAGING INFORMATION

Orderable Device	Status (1)	Package Type	Package Drawing	Pins	Package Qty	Eco Plan (2)	Lead/Ball Finish (6)	MSL Peak Temp (3)	Op Temp (°C)	Device Marking (4/5)	Samples
LM2622MM-ADJ/NOPB	ACTIVE	VSSOP	DGK	8	1000	Green (RoHS & no Sb/Br)	SN	Level-1-260C-UNLIM	-40 to 125	S18B	Samples
LM2622MMX-ADJ/NOPB	ACTIVE	VSSOP	DGK	8	3500	Green (RoHS & no Sb/Br)	SN	Level-1-260C-UNLIM	-40 to 125	S18B	Samples

(1) The marketing status values are defined as follows:
ACTIVE: Product device recommended for new designs.
LIFEBUY: TI has announced that the device will be discontinued, and a lifetime-buy period is in effect.
NRND: Not recommended for new designs. Device is in production to support existing customers, but TI does not recommend using this part in a new design.
PREVIEW: Device has been announced but is not in production. Samples may or may not be available.
OBSOLETE: TI has discontinued the production of the device.

(2) **RoHS:** TI defines "RoHS" to mean semiconductor products that are compliant with the current EU RoHS requirements for all 10 RoHS substances, including the requirement that RoHS substance do not exceed 0.1% by weight in homogeneous materials. Where designed to be soldered at high temperatures, "RoHS" products are suitable for use in specified lead-free processes. TI may reference these types of products as "Pb-Free".
RoHS Exempt: TI defines "RoHS Exempt" to mean products that contain lead but are compliant with EU RoHS pursuant to a specific EU RoHS exemption.
Green: TI defines "Green" to mean the content of Chlorine (Cl) and Bromine (Br) based flame retardants meet JS709B low halogen requirements of <=1000ppm threshold. Antimony trioxide based flame retardants must also meet the <=1000ppm threshold requirement.

(3) MSL, Peak Temp. - The Moisture Sensitivity Level rating according to the JEDEC industry standard classifications, and peak solder temperature.

(4) There may be additional marking, which relates to the logo, the lot trace code information, or the environmental category on the device.

(5) Multiple Device Markings will be inside parentheses. Only one Device Marking contained in parentheses and separated by a "~" will appear on a device. If a line is indented then it is a continuation of the previous line and the two combined represent the entire Device Marking for that device.

(6) Lead/Ball Finish - Orderable Devices may have multiple material finish options. Finish options are separated by a vertical ruled line. Lead/Ball Finish values may wrap to two lines if the finish value exceeds the maximum column width.

Important Information and Disclaimer: The information provided on this page represents TI's knowledge and belief as of the date that it is provided. TI bases its knowledge and belief on information provided by third parties, and makes no representation or warranty as to the accuracy of such information. Efforts are underway to better integrate information from third parties. TI has taken and continues to take reasonable steps to provide representative and accurate information but may not have conducted destructive testing or chemical analysis on incoming materials and chemicals. TI and TI suppliers consider certain information to be proprietary, and thus CAS numbers and other limited information may not be available for release.

In no event shall TI's liability arising out of such information exceed the total purchase price of the TI part(s) at issue in this document sold by TI to Customer on an annual basis.

TAPE AND REEL INFORMATION

REEL DIMENSIONS

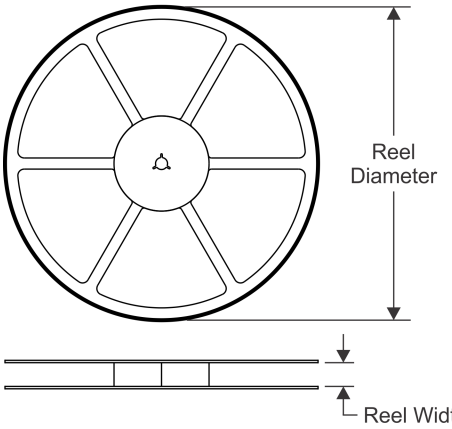

TAPE DIMENSIONS

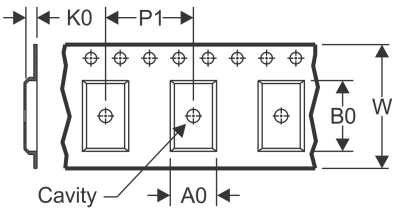

A0	Dimension designed to accommodate the component width
B0	Dimension designed to accommodate the component length
K0	Dimension designed to accommodate the component thickness
W	Overall width of the carrier tape
P1	Pitch between successive cavity centers

QUADRANT ASSIGNMENTS FOR PIN 1 ORIENTATION IN TAPE

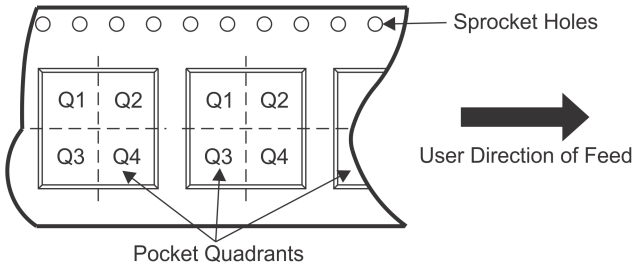

*All dimensions are nominal

Device	Package Type	Package Drawing	Pins	SPQ	Reel Diameter (mm)	Reel Width W1 (mm)	A0 (mm)	B0 (mm)	K0 (mm)	P1 (mm)	W (mm)	Pin1 Quadrant
LM2622MM-ADJ/NOPB	VSSOP	DGK	8	1000	178.0	12.4	5.3	3.4	1.4	8.0	12.0	Q1
LM2622MMX-ADJ/NOPB	VSSOP	DGK	8	3500	330.0	12.4	5.3	3.4	1.4	8.0	12.0	Q1

TAPE AND REEL BOX DIMENSIONS

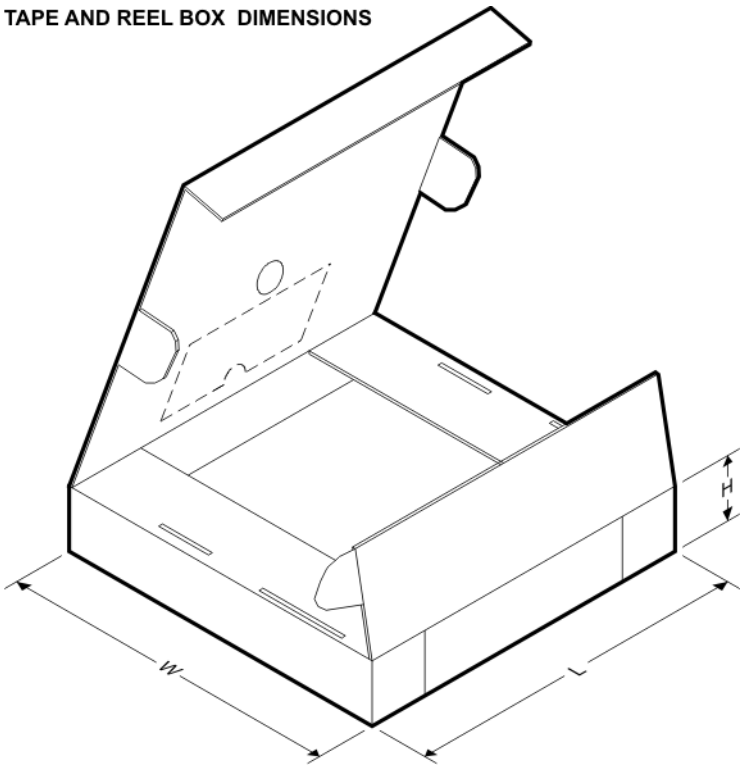

*All dimensions are nominal

Device	Package Type	Package Drawing	Pins	SPQ	Length (mm)	Width (mm)	Height (mm)
LM2622MM-ADJ/NOPB	VSSOP	DGK	8	1000	210.0	185.0	35.0
LM2622MMX-ADJ/NOPB	VSSOP	DGK	8	3500	367.0	367.0	35.0

DGK (S–PDSO–G8) PLASTIC SMALL–OUTLINE PACKAGE

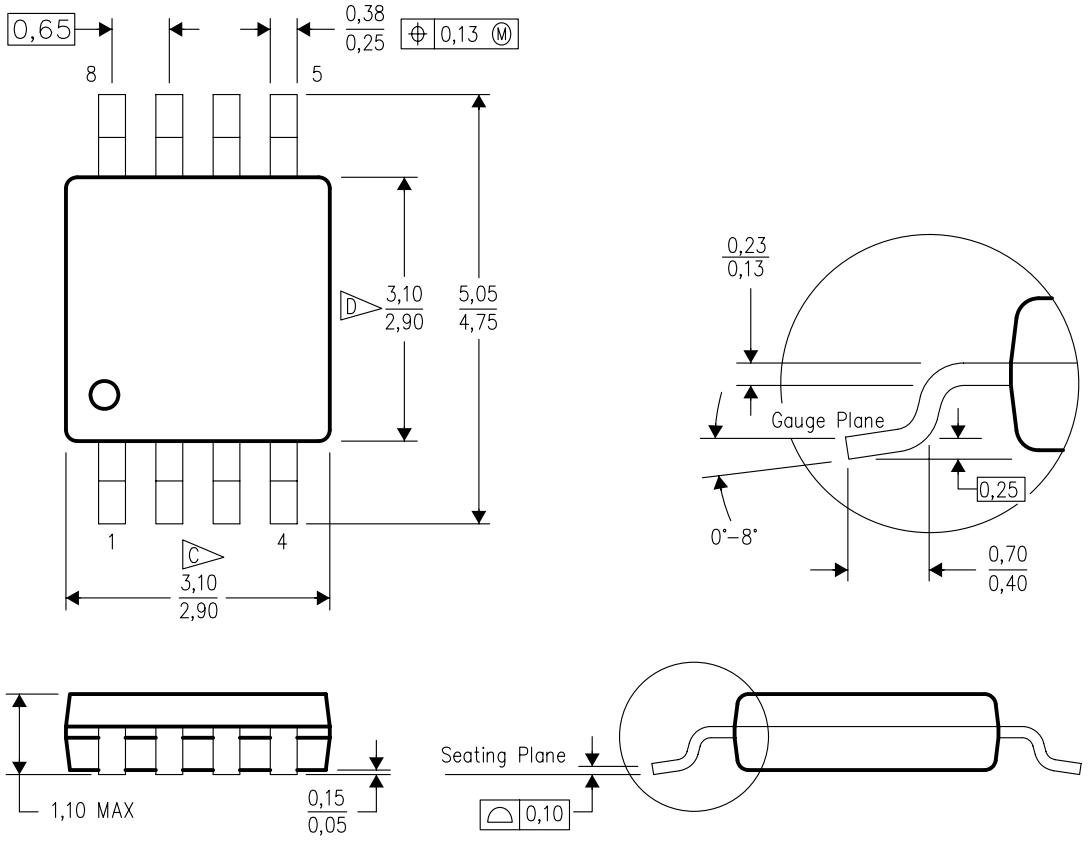

4073329/E 05/06

NOTES:
A. All linear dimensions are in millimeters.
B. This drawing is subject to change without notice.
C. Body length does not include mold flash, protrusions, or gate burrs. Mold flash, protrusions, or gate burrs shall not exceed 0.15 per end.
D. Body width does not include interlead flash. Interlead flash shall not exceed 0.50 per side.
E. Falls within JEDEC MO–187 variation AA, except interlead flash.

DGK (S–PDSO–G8) PLASTIC SMALL OUTLINE PACKAGE

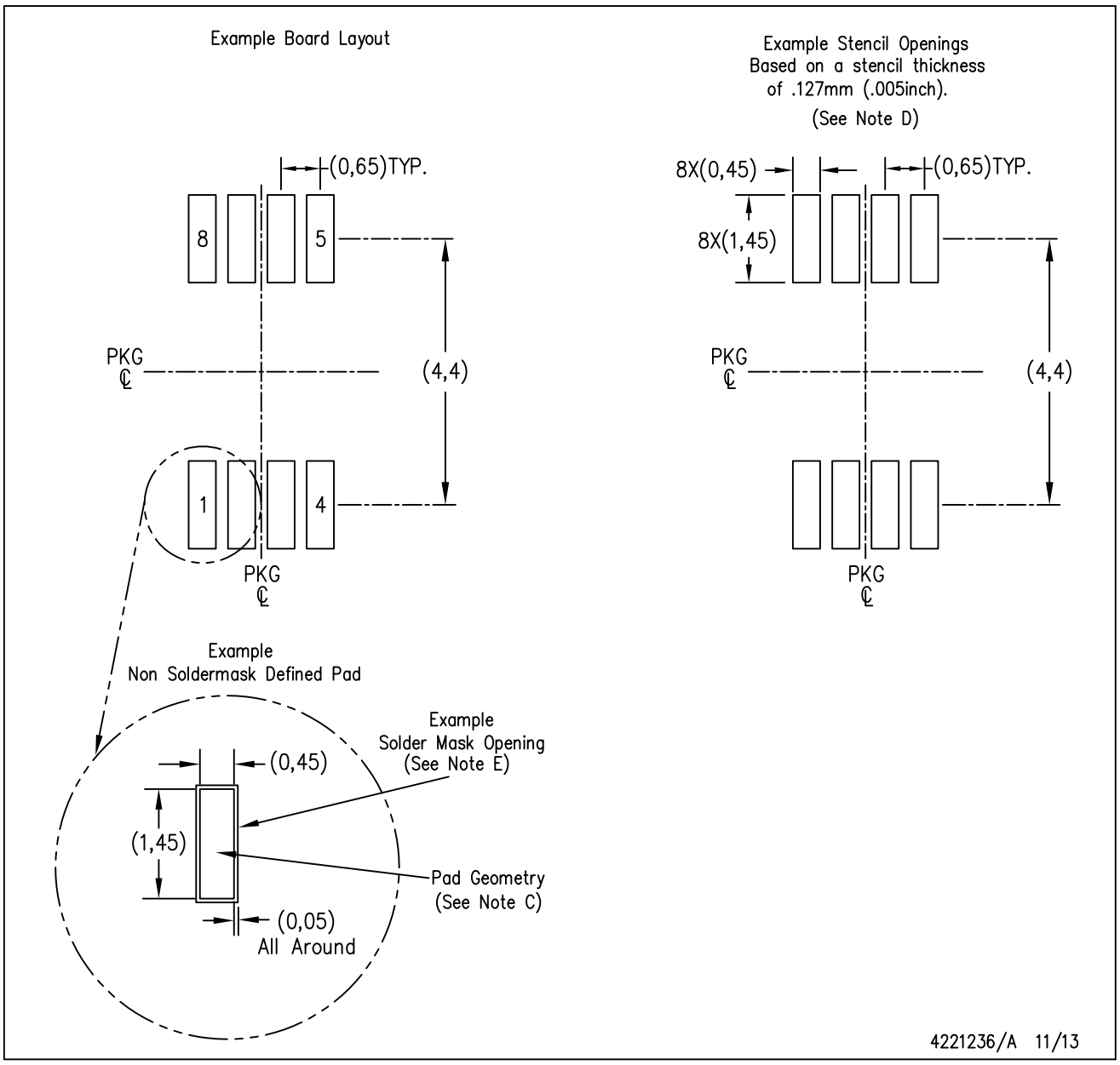

NOTES:
A. All linear dimensions are in millimeters.
B. This drawing is subject to change without notice.
C. Publication IPC–7351 is recommended for alternate designs.
D. Laser cutting apertures with trapezoidal walls and also rounding corners will offer better paste release. Customers should contact their board assembly site for stencil design recommendations. Refer to IPC–7525 for other stencil recommendations.
E. Customers should contact their board fabrication site for solder mask tolerances between and around signal pads.

IMPORTANT NOTICE AND DISCLAIMER

TI PROVIDES TECHNICAL AND RELIABILITY DATA (INCLUDING DATASHEETS), DESIGN RESOURCES (INCLUDING REFERENCE DESIGNS), APPLICATION OR OTHER DESIGN ADVICE, WEB TOOLS, SAFETY INFORMATION, AND OTHER RESOURCES “AS IS” AND WITH ALL FAULTS, AND DISCLAIMS ALL WARRANTIES, EXPRESS AND IMPLIED, INCLUDING WITHOUT LIMITATION ANY IMPLIED WARRANTIES OF MERCHANTABILITY, FITNESS FOR A PARTICULAR PURPOSE OR NON-INFRINGEMENT OF THIRD PARTY INTELLECTUAL PROPERTY RIGHTS.

These resources are intended for skilled developers designing with TI products. You are solely responsible for (1) selecting the appropriate TI products for your application, (2) designing, validating and testing your application, and (3) ensuring your application meets applicable standards, and any other safety, security, or other requirements. These resources are subject to change without notice. TI grants you permission to use these resources only for development of an application that uses the TI products described in the resource. Other reproduction and display of these resources is prohibited. No license is granted to any other TI intellectual property right or to any third party intellectual property right. TI disclaims responsibility for, and you will fully indemnify TI and its representatives against, any claims, damages, costs, losses, and liabilities arising out of your use of these resources.

TI’s products are provided subject to TI’s Terms of Sale (www.ti.com/legal/termsofsale.html) or other applicable terms available either on ti.com or provided in conjunction with such TI products. TI’s provision of these resources does not expand or otherwise alter TI’s applicable warranties or warranty disclaimers for TI products.

Mailing Address: Texas Instruments, Post Office Box 655303, Dallas, Texas 75265
Copyright © 2020, Texas Instruments Incorporated