LM2595

1.0 A, Step-Down Switching Regulator

The LM2595 regulator is monolithic integrated circuit ideally suited for easy and convenient design of a step−down switching regulator (buck converter). It is capable of driving a 1.0 A load with excellent line and load regulation. This device is available in adjustable output version and it is internally compensated to minimize the number of external components to simplify the power supply design.

Since LM2595 converter is a switch−mode power supply, its efficiency is significantly higher in comparison with popular three−terminal linear regulators, especially with higher input voltages.

The LM2595 operates at a switching frequency of 150 kHz thus allowing smaller sized filter components than what would be needed with lower frequency switching regulators. Available in a standard 5−lead TO−220 package with several different lead bend options, and D^2PAK surface mount package.

The other features include a guaranteed ±4% tolerance on output voltage within specified input voltages and output load conditions, and ±15% on the oscillator frequency. External shutdown is included, featuring 50 μA (typical) standby current. Self protection features include switch cycle−by−cycle current limit for the output switch, as well as thermal shutdown for complete protection under fault conditions.

Features

- Adjustable Output Voltage Range 1.23 V – 37 V
- Guaranteed 1.0 A Output Load Current
- Wide Input Voltage Range up to 40 V
- 150 kHz Fixed Frequency Internal Oscillator
- TTL Shutdown Capability
- Low Power Standby Mode, typ 50 μA
- Thermal Shutdown and Current Limit Protection
- Internal Loop Compensation
- Moisture Sensitivity Level (MSL) Equals 1
- Pb−Free Packages are Available

Applications

- Simple High−Efficiency Step−Down (Buck) Regulator
- Efficient Pre−Regulator for Linear Regulators
- On−Card Switching Regulators
- Positive to Negative Converter (Buck−Boost)
- Negative Step−Up Converters
- Power Supply for Battery Chargers

ON Semiconductor®

http://onsemi.com

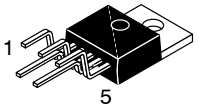

TO−220
TV SUFFIX
CASE 314B

Heatsink surface connected to Pin 3

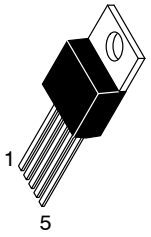

TO−220
T SUFFIX
CASE 314D

Pin
1. Output
2. V_{in}
3. Ground
4. Feedback
5. $\overline{ON}$/OFF

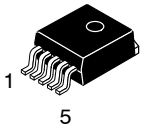

D^2PAK
D2T SUFFIX
CASE 936A

Heatsink surface (shown as terminal 6 in case outline drawing) is connected to Pin 3

ORDERING INFORMATION

See detailed ordering and shipping information in the package dimensions section on page 23 of this data sheet.

DEVICE MARKING INFORMATION

See general marking information in the device marking section on page 23 of this data sheet.

© Semiconductor Components Industries, LLC, 2009

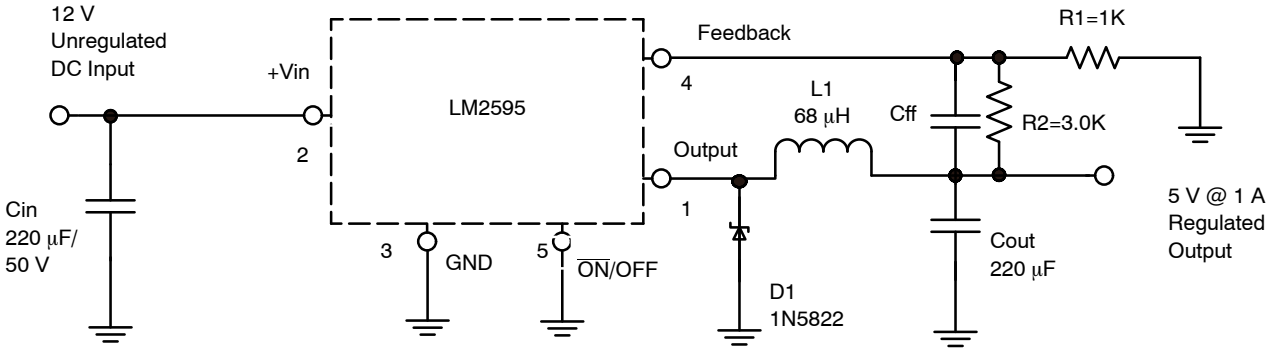

Figure 1. Typical Application

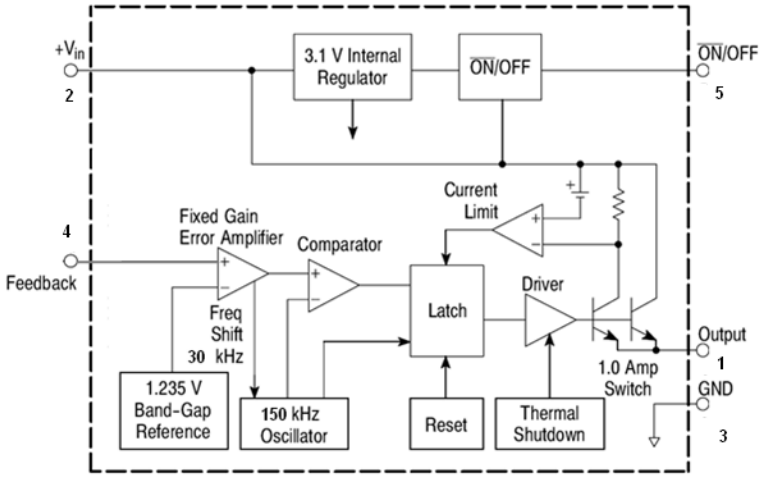

Figure 2. Representative Block Diagram

MAXIMUM RATINGS

Rating	Symbol	Value	Unit
Maximum Supply Voltage	V_{in}	45	V
$\overline{ON}$/OFF Pin Input Voltage	$\overline{ON}$/OFF	$-0.3\ V \le V \le +V_{in}$	V
Output Voltage to Ground (Steady−State)	Output	−1.0	V
Power Dissipation			
Case 314B and 314D (TO−220, 5−Lead)	P_D	Internally Limited	W
Thermal Resistance, Junction−to−Ambient	$R_{\theta JA}$	65	°C/W
Thermal Resistance, Junction−to−Case	$R_{\theta JC}$	5.0	°C/W
Case 936A (D^2PAK)	P_D	Internally Limited	W
Thermal Resistance, Junction−to−Ambient	$R_{\theta JA}$	70	°C/W
Thermal Resistance, Junction−to−Case	$R_{\theta JC}$	5.0	°C/W
Storage Temperature Range	T_{stg}	−65 to +150	°C
Minimum ESD Rating (Human Body Model: C = 100 pF, R = 1.5 kΩ)	−	2.0	kV
Lead Temperature (Soldering, 10 seconds)	−	260	°C
Maximum Junction Temperature	T_J	150	°C

Stresses exceeding Maximum Ratings may damage the device. Maximum Ratings are stress ratings only. Functional operation above the Recommended Operating Conditions is not implied. Extended exposure to stresses above the Recommended Operating Conditions may affect device reliability.

PIN FUNCTION DESCRIPTION

Pin	Symbol	Description (Refer to Figure 1)
1	Output	This is the emitter of the internal switch. The saturation voltage V_{sat} of this output switch is typically 1.0 V. It should be kept in mind that the PCB area connected to this pin should be kept to a minimum in order to minimize coupling to sensitive circuitry.
2	V_{in}	This pin is the positive input supply for the LM2595 step−down switching regulator. In order to minimize voltage transients and to supply the switching currents needed by the regulator, a suitable input bypass capacitor must be present (C_{in} in Figure 1).
3	GND	Circuit ground pin. See the information about the printed circuit board layout.
4	Feedback	This pin is the direct input of the error amplifier and the resistor network R2, R1 is connected externally to allow programming of the output voltage.
5	$\overline{ON}$/OFF	It allows the switching regulator circuit to be shut down using logic level signals, thus dropping the total input supply current to approximately 50 μA. The threshold voltage is typically 1.6 V. Applying a voltage above this value (up to $+V_{in}$) shuts the regulator off. If the voltage applied to this pin is lower than 1.6 V or if this pin is left open, the regulator will be in the “on” condition.

OPERATING RATINGS (Operating Ratings indicate conditions for which the device is intended to be functional, but do not guarantee specific performance limits. For guaranteed specifications and test conditions, see the Electrical Characteristics.)

Rating	Symbol	Value	Unit
Operating Junction Temperature Range	T_J	−40 to +125	°C
Supply Voltage	V_{in}	4.5 to 40	V

SYSTEM PARAMETERS

ELECTRICAL CHARACTERISTICS Specifications with standard type face are for T_J = 25°C, and those with boldface type apply over full Operating Temperature Range −40°C to +125°C

Characteristics	Symbol	Min	Typ	Max	Unit
LM2595 (Note 1, Test Circuit Figure 16)					
Feedback Voltage (V_{in} = 12 V, I_{Load} = 0.2 A, V_{out} = 5.0 V,)	V_{FB_nom}		1.23		V
Feedback Voltage (8.0 V ≤ V_{in} ≤ 40 V, 0.2 A ≤ I_{Load} ≤ 1.0 A, V_{out} = 5.0 V)	V_{FB}	1.193 **1.18**		1.267 **1.28**	V
Efficiency (V_{in} = 12 V, I_{Load} = 1.0 A, V_{out} = 5.0 V)	η	–	81	–	%
Characteristics	**Symbol**	**Min**	**Typ**	**Max**	**Unit**
Feedback Bias Current (V_{out} = 5.0 V)	I_b		25	100 **200**	nA
Oscillator Frequency (Note 2)	f_{osc}	135 **120**	150	165 **180**	kHz
Saturation Voltage (I_{out} = 1.0 A, Notes 3 and 4)	V_{sat}		1.0	1.2 **1.3**	V
Max Duty Cycle “ON” (Note 4)	DC		95		%
Current Limit (Peak Current, Notes 2 and 3)	I_{CL}	1.2 **1.15**	2.1	2.4 **2.6**	A
Output Leakage Current (Notes 5 and 6) Output = 0 V Output = −1.0 V	I_L		 0.5 13	 2.0 30	mA
Quiescent Current (Note 5)	I_Q		5.0	10	mA
Standby Quiescent Current ($\overline{ON}$/OFF Pin = 5.0 V (“OFF”)) (Note 6)	I_{stby}		50	200 **250**	μA
$\overline{ON}$/OFF PIN LOGIC INPUT					
Threshold Voltage			1.6		V
V_{out} = 0 V (Regulator OFF)	V_{IH}	2.2 **2.4**			V
V_{out} = Nominal Output Voltage (Regulator ON)	V_{IL}			1.0 **0.8**	V
$\overline{ON}$/OFF Pin Input Current					
$\overline{ON}$/OFF Pin = 5.0 V (Regulator OFF)	I_{IH}	–	15	30	μA
$\overline{ON}$/OFF Pin = 0 V (regulator ON)	I_{IL}	–	0.01	5.0	μA

1. External components such as the catch diode, inductor, input and output capacitors can affect switching regulator system performance. When the LM2595 is used as shown in the Figure 16 test circuit, system performance will be as shown in system parameters section.
2. The oscillator frequency reduces to approximately 30 kHz in the event of an output short or an overload which causes the regulated output voltage to drop approximately 40% from the nominal output voltage. This self protection feature lowers the average dissipation of the IC by lowering the minimum duty cycle from 5% down to approximately 2%.
3. No diode, inductor or capacitor connected to output (Pin 1) sourcing the current.
4. Feedback (Pin 4) removed from output and connected to 0 V.
5. Feedback (Pin 4) removed from output and connected to +12 V to force the output transistor “off”.
6. V_{in} = 40 V.

TYPICAL PERFORMANCE CHARACTERISTICS (Circuit of Figure 16)

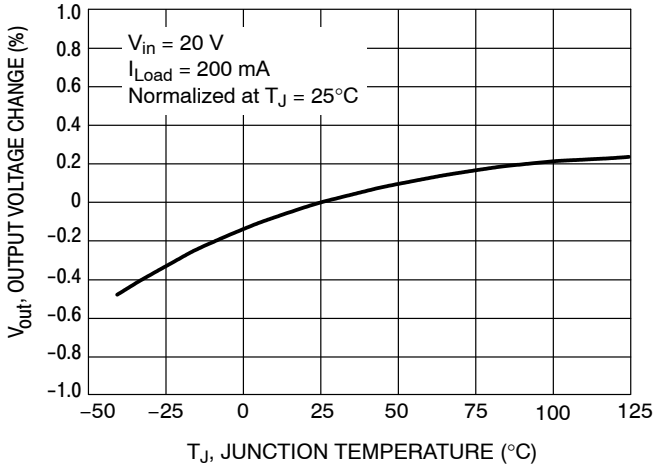

Figure 3. Normalized Output Voltage

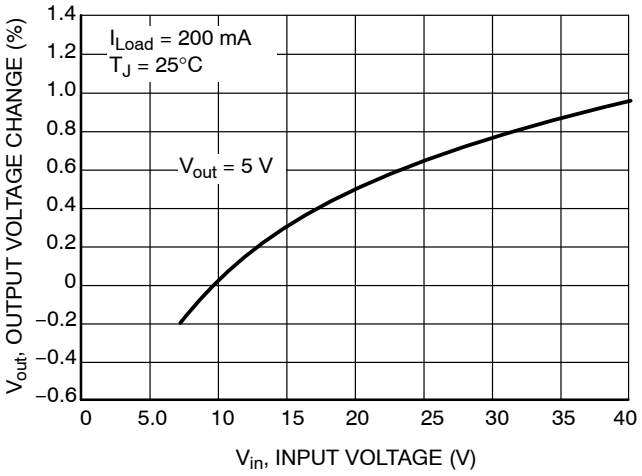

Figure 4. Line Regulation

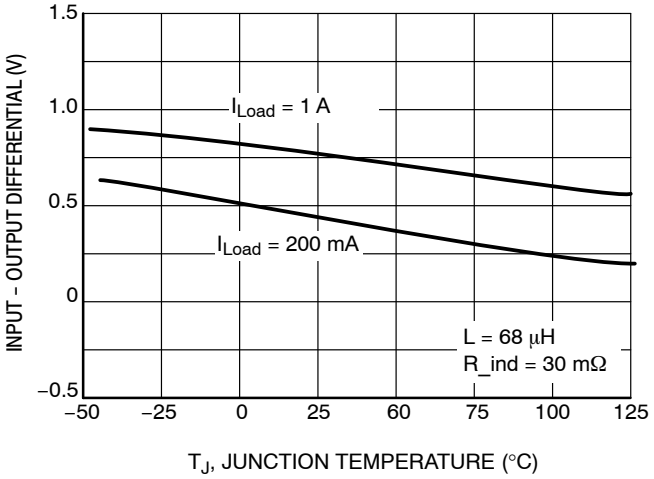

Figure 5. Dropout Voltage

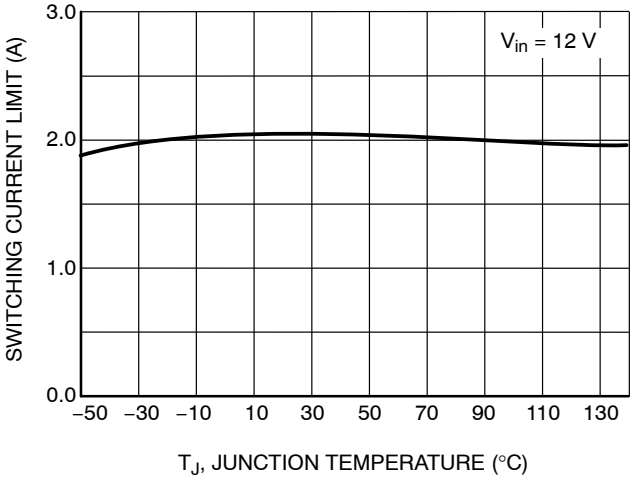

Figure 6. Current Limit

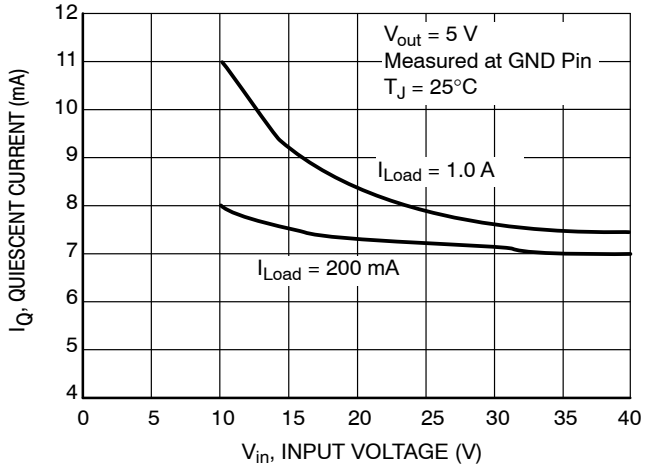

Figure 7. Quiescent Current

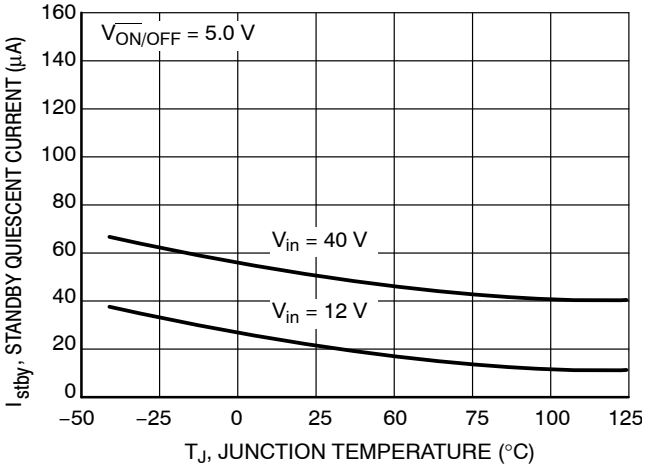

Figure 8. Standby Quiescent Current

TYPICAL PERFORMANCE CHARACTERISTICS (Circuit of Figure 16)

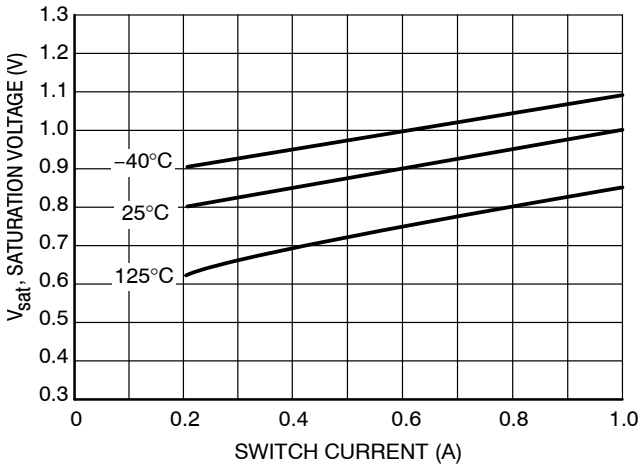

Figure 9. Switch Saturation Voltage

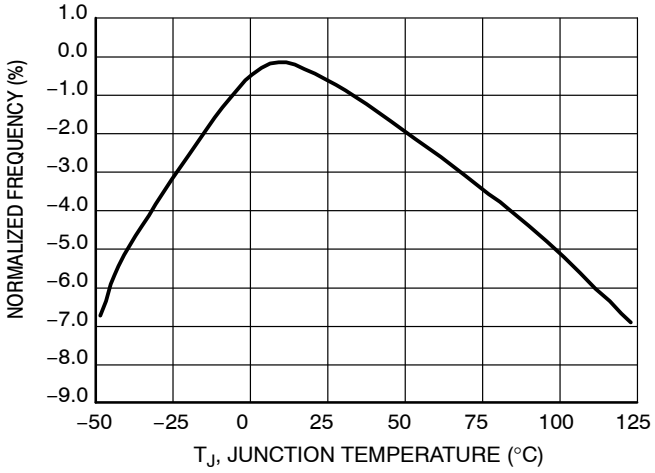

Figure 10. Switching Frequency

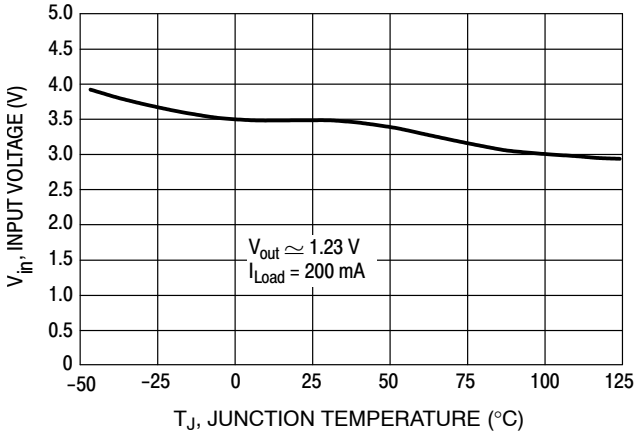

Figure 11. Minimum Supply Operating Voltage

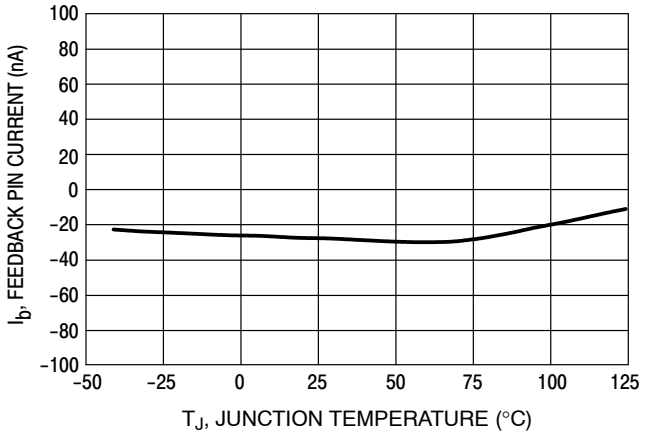

Figure 12. Feedback Pin Current

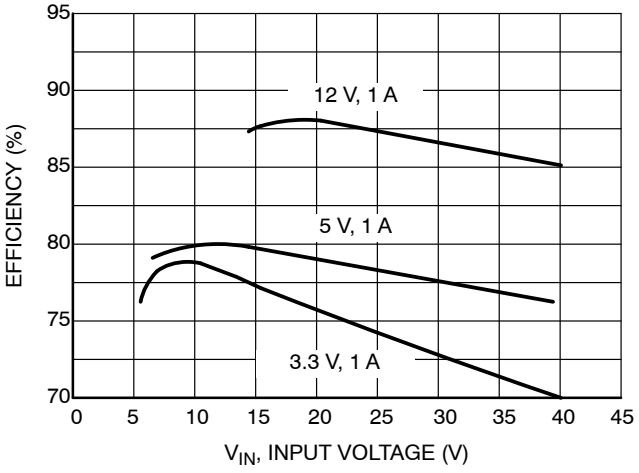

Figure 13. Efficiency

TYPICAL PERFORMANCE CHARACTERISTICS (Circuit of Figure 16)

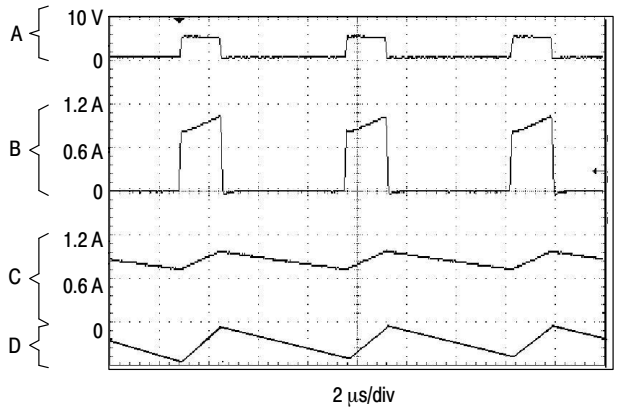

Figure 14. Switching Waveforms

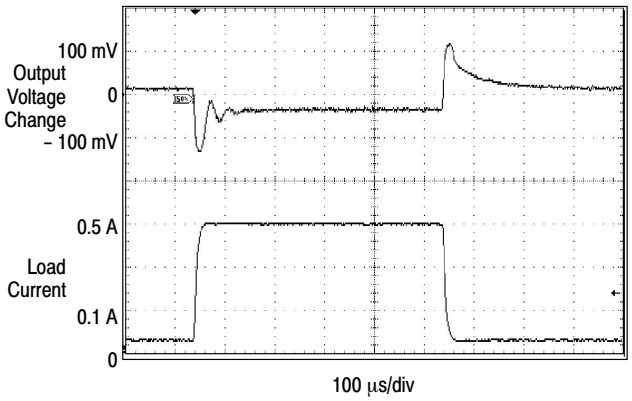

Figure 15. Load Transient Response

V_{out} = 5 V
A: Output Pin Voltage, 10 V/div
B: Switch Current, 0.6 A/div
C: Inductor Current, 0.6 A/div, AC−Coupled
D: Output Ripple Voltage, 50 mV/div, AC−Coupled
Horizontal Time Base: 2.0 μs/div

Adjustable Output Voltage Versions

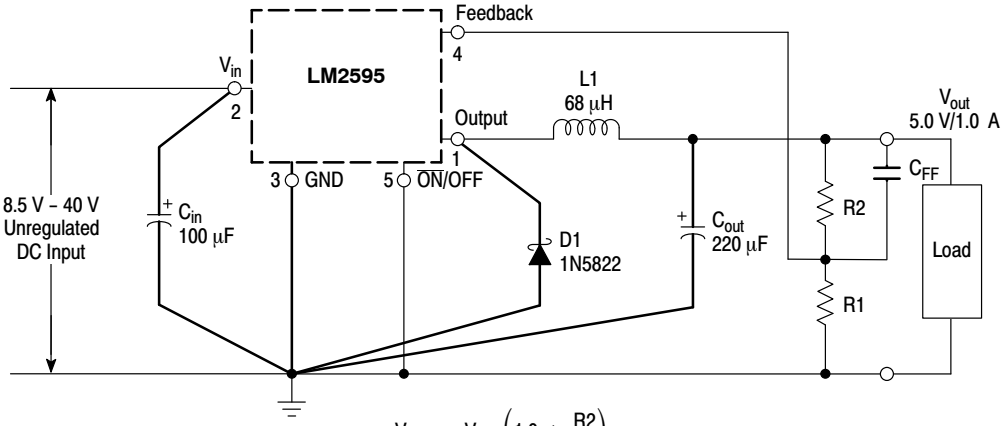

$$V_{out} = V_{ref}\left(1.0 + \frac{R2}{R1}\right)$$

$$R2 = R1\left(\frac{V_{out}}{V_{ref}} 1.0\right)$$

Where V_{ref} = 1.23 V, R1
between 1.0 k and 5.0 k

Figure 16. Typical Test Circuit

PCB LAYOUT GUIDELINES

As in any switching regulator, the layout of the printed circuit board is very important. Rapidly switching currents associated with wiring inductance, stray capacitance and parasitic inductance of the printed circuit board traces can generate voltage transients which can generate electromagnetic interferences (EMI) and affect the desired operation. As indicated in the Figure 16, to minimize inductance and ground loops, the length of the leads indicated by heavy lines should be kept as short as possible.

For best results, single−point grounding (as indicated) or ground plane construction should be used.

On the other hand, the PCB area connected to the Pin 1 (emitter of the internal switch) of the LM2595 should be kept to a minimum in order to minimize coupling to sensitive circuitry.

Another sensitive part of the circuit is the feedback. It is important to keep the sensitive feedback wiring short. To assure this, physically locate the programming resistors near to the regulator, when using the adjustable version of the LM2595 regulator.

DESIGN PROCEDURE

Buck Converter Basics

The LM2595 is a “Buck” or Step−Down Converter which is the most elementary forward−mode converter. Its basic schematic can be seen in Figure 17.

The operation of this regulator topology has two distinct time periods. The first one occurs when the series switch is on, the input voltage is connected to the input of the inductor.

The output of the inductor is the output voltage, and the rectifier (or catch diode) is reverse biased. During this period, since there is a constant voltage source connected across the inductor, the inductor current begins to linearly ramp upwards, as described by the following equation:

$$I_{L(on)} = \frac{(V_{IN} - V_{OUT})t_{on}}{L}$$

During this “on” period, energy is stored within the core material in the form of magnetic flux. If the inductor is properly designed, there is sufficient energy stored to carry the requirements of the load during the “off” period.

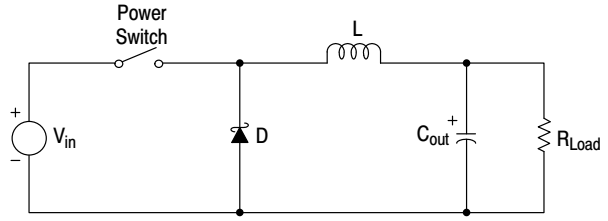

Figure 17. Basic Buck Converter

The next period is the “off” period of the power switch. When the power switch turns off, the voltage across the inductor reverses its polarity and is clamped at one diode voltage drop below ground by the catch diode. The current now flows through the catch diode thus maintaining the load current loop. This removes the stored energy from the inductor. The inductor current during this time is:

$$I_{L(off)} = \frac{(V_{OUT} - V_D)t_{off}}{L}$$

This period ends when the power switch is once again turned on. Regulation of the converter is accomplished by varying the duty cycle of the power switch. It is possible to describe the duty cycle as follows:

$d = \frac{t_{on}}{T}$, where T is the period of switching.

For the buck converter with ideal components, the duty cycle can also be described as:

$$d = \frac{V_{out}}{V_{in}}$$

Figure 18 shows the buck converter, idealized waveforms of the catch diode voltage and the inductor current.

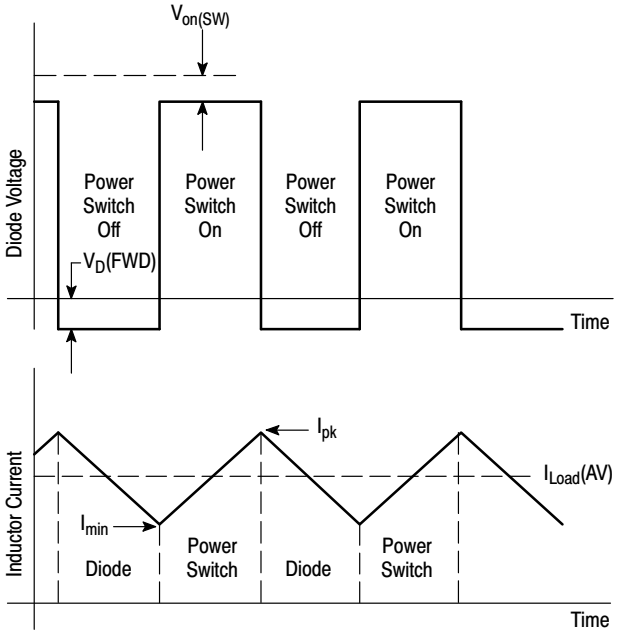

Figure 18. Buck Converter Idealized Waveforms

PROCEDURE (ADJUSTABLE OUTPUT VERSION: LM2595)

Procedure	Example
Given Parameters: V_{out} = Regulated Output Voltage $V_{in(max)}$ = Maximum DC Input Voltage $I_{Load(max)}$ = Maximum Load Current	**Given Parameters:** V_{out} = 5.0 V $V_{in(max)}$ = 12 V $I_{Load(max)}$ = 1.0 A
1. Programming Output Voltage To select the right programming resistor R1 and R2 value (see Figure 1) use the following formula: $V_{out} = V_{ref}\left(1.0 + \frac{R2}{R1}\right)$ where V_{ref} = 1.23 V Resistor R1 can be between 1.0 k and 5.0 kΩ. (For best temperature coefficient and stability with time, use 1% metal film resistors). $R2 = R1\left(\frac{V_{out}}{V_{ref}} - 1.0\right)$	**1. Programming Output Voltage** (selecting R1 and R2) Select R1 and R2: $V_{out} = 1.23\left(1.0 + \frac{R2}{R1}\right)$ Select R1 = 1.0 kΩ $R2 = R1\left(\frac{V_{out}}{V_{ref}} - 1.0\right) = \left(\frac{5\ V}{1.23\ V} - 1.0\right)$ R2 = 3.07 kΩ, choose a 3.0k metal film resistor.
2. Input Capacitor Selection (C_{in}) To prevent large voltage transients from appearing at the input and for stable operation of the converter, an aluminium or tantalum electrolytic bypass capacitor is needed between the input pin $+V_{in}$ and ground pin GND This capacitor should be located close to the IC using short leads. This capacitor should have a low ESR (Equivalent Series Resistance) value. For additional information see input capacitor section in the "Application Information" section of this data sheet.	**2. Input Capacitor Selection (C_{in})** A 220 μF, 50 V aluminium electrolytic capacitor located near the input and ground pin provides sufficient bypassing.
3. Catch Diode Selection (D1) **A.** Since the diode maximum peak current exceeds the regulator maximum load current the catch diode current rating must be at least 1.2 times greater than the maximum load current. For a robust design, the diode should have a current rating equal to the maximum current limit of the LM2595 to be able to withstand a continuous output short. **B.** The reverse voltage rating of the diode should be at least 1.25 times the maximum input voltage.	**3. Catch Diode Selection (D1)** **A.** For this example, a 1.0 A (for a robust design 3.0 A diode is recommended) current rating is adequate. **B.** For V_{in} = 12 V use a 20 V 1N5817 (1N5820) Schottky diode or any suggested fast recovery diode in the Table 2.

PROCEDURE (ADJUSTABLE OUTPUT VERSION: LM2595) (CONTINUED)

Procedure	Example
4. Inductor Selection (L1) **A.** Use the following formula to calculate the inductor Volt x microsecond [V x μs] constant: $E \times T = \left(V_{IN} - V_{OUT} - V_{SAT}\right) \times \frac{V_{OUT} + V_D}{V_{IN} - V_{SAT} + V_D} \times \frac{1000}{150\ kHz} (V \times \mu s)$ **B.** Match the calculated E x T value with the corresponding number on the vertical axis of the Inductor Value Selection Guide shown in Figure 19. This E x T constant is a measure of the energy handling capability of an inductor and is dependent upon the type of core, the core area, the number of turns, and the duty cycle. **C.** Next step is to identify the inductance region intersected by the E x T value and the maximum load current value on the horizontal axis shown in Figure 19. **D.** Select an appropriate inductor from Table 3. The inductor chosen must be rated for a switching frequency of 150 kHz and for a current rating of 1.15 x I_{Load}. The inductor current rating can also be determined by calculating the inductor peak current: $I_{p(max)} = I_{Load(max)} + \frac{\left(V_{in} - V_{out}\right) t_{on}}{2L}$ where t_{on} is the "on" time of the power switch and $t_{on} = \frac{V_{out}}{V_{in}} \times \frac{1.0}{f_{osc}}$	**4. Inductor Selection (L1)** **A.** Calculate E x T [V x μs] constant: $E \times T = (12 - 5 - 1.0) \times \frac{5 + 0.5}{12 - 1 + 0.5} \times \frac{1000}{150\ kHz} (V \times \mu s)$ $E \times T = (6) \times \frac{5.5}{11.5} \times 6.7 (V \times \mu s)$ **B.** E x T = 19.2 [V x μs] **C.** $I_{Load(max)}$ = 1.0 A Inductance Region = L30 **D.** Proper inductor value = 68 μH Choose the inductor from Table 3.
5. Output Capacitor Selection (C_{out}) **A.** Since the LM2595 is a forward−mode switching regulator with voltage mode control, its open loop has 2−pole−1−zero frequency characteristic. The loop stability is determined by the output capacitor (capacitance, ESR) and inductance values. For stable operation use recommended values of the output capacitors in Table 1. Low ESR electrolytic capacitors between 180 μF and 1000 μF provide best results. **B.** The capacitors voltage rating should be at least 1.5 times greater than the output voltage, and often much higher voltage rating is needed to satisfy low ESR requirement	**5. Output Capacitor Selection (C_{out})** **A.** In this example, it is recommended to use a Nichicon PM capacitor: 220 μF/25 V
6. Feedforward Capacitor (C_{FF}) It provides additional loop stability mainly for higher input voltages. For Cff selection use Table 1. The compensation capacitor between 0.6 nF and 15 nF is wired in parallel with the output voltage setting resistor R2, The capacitor type can be ceramic, plastic, etc..	**6. Feedforward Capacitor (C_{FF})** In this example, it is recommended to use a feedforward capacitor 4.7 nF.

LM2595 Series Buck Regulator Design Procedures (continued)

Table 1. RECOMMENDED VALUES OF THE OUTPUT CAPACITOR AND FEEDFORWARD CAPACITOR

(I_{load} = 1.0 A)

Nichicon Pm Capacitors									
V_{in} (V)	Capacity/ESR/Voltage Range (μF/mΩ/V)								
40	1000/60/10	1000/60/10	1000/60/10	470/120/10	220/110/25	180/290/25	180/290/25	82/190/35	82/190/35
35	1000/60/10	1000/60/10	1000/60/10	220/110/25	180/140/25	120/200/25	120/200/25	82/190/35	82/190/35
26	1000/60/10	470/120/10	220/110/25	220/110/25	180/140/25	120/200/25	120/200/25	82/190/35	
20	1000/60/10	470/120/10	220/110/25	220/110/25	180/140/25	120/200/25	120/200/25		
18	1000/60/10	470/120/10	220/110/25	220/110/25	180/140/25	120/200/25	120/200/25		
12	470/120/10	470/120/10	220/110/25	220/110/25	180/140/25				
10	470/120/10	470/120/10	220/110/25	220/110/25					
V_{out}	2	3	4	6	9	12	15	24	28
C_{ff} (nF)	10	4.7	4.7	4.7	1.5	1.5	1	0.6	0.6

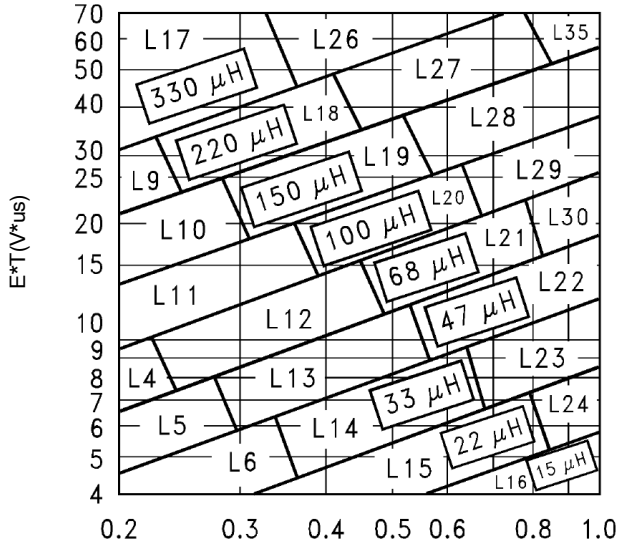

Figure 19. Inductor Value Selection Guides (For Continuous Mode Operation)

Table 2. DIODE SELECTION

	1A Diodes				3A Diodes			
	Surface Mount		Through Hole		Surface Mount		Through Hole	
VR	Schottky	Ultra Fast Recovery	Schottky	Ultra Fast Recovery	Schottky	Ultra Fast Recovery	Schottky	Ultra Fast Recovery
20V	SK12	All of these diodes are rated to at least 50 V MURS120 10BF10	1N5817	All of these diodes are rated to at least 50 V. MUR120		All of these diodes are rated to at least 50 V. MURS320 30WF10	1N5820	All of these diodes are rated to at least 50 V. MUR320 30WF10
			SR102		SK32		SR302	
							MBR320	
30 V	SK13		1N5818				1N5821	
	MBRS130		SR103		SK33		MBR330	
			11DQ03				31DQ03	
40 V	SK14						1N5822	
	MBRS140		1N5819		SK34		SR304	
	10BQ040		SR104		MBRS340		MBR340	
	10MQ040		11DQ04		30WQ04		31DQ04	
50 V or More	MBRS160		SR105		SK35		SR305	
	10BQ050		MBR150		MBR360		MBR350	
	10MQ060		11DQ05		30WQ05		31DQ05	

Table 3. INDUCTOR MANUFACTURERS PART NUMBERS

	Inductance (μH)	Current (A)	Renco		Pulse Engineering		Coilcraft	
			Through Hole	Surface Mount	Through Hole	Surface Mount	Through Hole	Surface Mount
L4	68	0.32	RL−1284−68−43	RL1500−68	PE−53804	PE−53804−S	−	DO1608−68
L5	47	0.37	RL−1284−47−43	RL1500−47	PE−53805	PE−53805−S	−	DO1608−473
L6	33	0.44	RL−1284−33−43	RL1500−33	PE−53806	PE−53806−S	−	DO1608−333
L9	220	0.32	RL−5470−3	RL1500−220	PE−53809	PE−53809−S	−	DO3308−224
L10	150	0.39	RL−5470−4	RL1500−150	PE−53810	PE−53810−S	−	DO3308−154
L11	100	0.48	RL−5470−5	RL1500−100	PE−53811	PE−53811−S	−	DO3308−104
L12	68	0.58	RL−5470−6	RL1500−68	PE−53812	PE−53812−S	−	DO3308−683
L13	47	0.70	RL−5470−7	RL1500−47	PE−53813	PE−53813−S	−	DO3308−473
L14	33	0.83	RL−1284−33−43	RL1500−33	PE−53814	PE−53814−S	−	DO3308−333
L15	22	0.99	RL−1284−22−43	RL1500−22	PE−53815	PE−53815−S	−	DO3308−223
L16	15	1.24	RL−1284−15−43	RL1500−15	PE−53816	PE−53816−S	−	DO3308−153
L17	330	0.42	RL−5471−1	RL1500−330	PE−53817	PE−53817−S	−	DO3316−334
L18	220	0.55	RL−5471−2	RL1500−220	PE−53818	PE−53818−S	−	DO3316−224
L19	150	0.66	RL−5471−3	RL1500−150	PE−53819	PE−53819−S	−	DO3316−154
L20	100	0.82	RL−5471−4	RL1500−100	PE−53820	PE−53820−S	−	DO3316−104
L21	68	0.99	RL−5471−5	RL1500−68	PE−53821	PE−53821−S	−	DO3316−683
L22	47	1.17	RL−5471−6	−	PE−53822	PE−53822−S	−	DO3316−473
L23	33	1.40	RL−5471−7	−	PE−53823	PE−53823−S	−	DO3316−333
L24	22	1.70	RL−1283−22−43	−	PE−53824	PE−53824−S	RFB0810−220L	DO3316−223
L26	330	0.80	RL−5471−1	−	PE−53826	PE−53826−S	RFB0810−331L	DO3340P−334ML
L27	220	1.00	RL−5471−2	−	PE−53827	PE−53827−S	RFB0810−221L	DO3340P−224ML
L28	150	1.20	RL−5471−3	−	PE−53828	PE−53828−S	RFB0810−151L	DO3340P−154ML
L29	100	1.47	RL−5471−4	−	PE−53829	PE−53829−S	RFB0810−101L	DO3340P−104ML
L30	68	1.78	RL−5471−5	−	PE−53830	PE−53830−S	RFB0810−680L	DO3340P−683ML
L35	47	2.15	RL−5473−1	−	PE−53935	PE−53935−S	RFB0810−470L	DO3340P−473ML

APPLICATION INFORMATION

EXTERNAL COMPONENTS

Input Capacitor (C_{in})

The Input Capacitor Should Have a Low ESR

For stable operation of the switch mode converter a low ESR (Equivalent Series Resistance) aluminium or solid tantalum bypass capacitor is needed between the input pin and the ground pin, to prevent large voltage transients from appearing at the input. It must be located near the regulator and use short leads. With most electrolytic capacitors, the capacitance value decreases and the ESR increases with lower temperatures. For reliable operation in temperatures below −25°C larger values of the input capacitor may be needed. Also paralleling a ceramic or solid tantalum capacitor will increase the regulator stability at cold temperatures.

RMS Current Rating of C_{in}

The important parameter of the input capacitor is the RMS current rating. Capacitors that are physically large and have large surface area will typically have higher RMS current ratings. For a given capacitor value, a higher voltage electrolytic capacitor will be physically larger than a lower voltage capacitor, and thus be able to dissipate more heat to the surrounding air, and therefore will have a higher RMS current rating. The consequence of operating an electrolytic capacitor beyond the RMS current rating is a shortened operating life. In order to assure maximum capacitor operating lifetime, the capacitor's RMS ripple current rating should be:

$$I_{rms} > 1.2 \times d \times I_{Load}$$

where d is the duty cycle, for a buck regulator

$$d = \frac{t_{on}}{T} = \frac{V_{out}}{V_{in}}$$

and $d = \frac{t_{on}}{T} = \frac{|V_{out}|}{|V_{out}| + V_{in}}$ for a buck−boost regulator.

Output Capacitor (C_{out})

For low output ripple voltage and good stability, low ESR output capacitors are recommended. An output capacitor has two main functions: it filters the output and provides regulator loop stability. The ESR of the output capacitor and the peak−to−peak value of the inductor ripple current are the main factors contributing to the output ripple voltage value. Standard aluminium electrolytics could be adequate for some applications but for quality design, low ESR types are recommended.

An aluminium electrolytic capacitor's ESR value is related to many factors such as the capacitance value, the voltage rating, the physical size and the type of construction. In most cases, the higher voltage electrolytic capacitors have lower ESR value. Often capacitors with much higher voltage ratings may be needed to provide low ESR values that, are required for low output ripple voltage.

Feedfoward Capacitor

(Adjustable Output Voltage Version)

This capacitor adds lead compensation to the feedback loop and increases the phase margin for better loop stability. For C_{FF} selection, see the design procedure section.

The Output Capacitor Requires an ESR Value That Has an Upper and Lower Limit

As mentioned above, a low ESR value is needed for low output ripple voltage, typically 1% to 2% of the output voltage. But if the selected capacitor's ESR is extremely low (below 0.05 Ω), there is a possibility of an unstable feedback loop, resulting in oscillation at the output. This situation can occur when a tantalum capacitor, that can have a very low ESR, is used as the only output capacitor.

At Low Temperatures, Put in Parallel Aluminium Electrolytic Capacitors with Tantalum Capacitors

Electrolytic capacitors are not recommended for temperatures below −25°C. The ESR rises dramatically at cold temperatures and typically rises 3 times at −25°C and as much as 10 times at −40°C. Solid tantalum capacitors have much better ESR spec at cold temperatures and are recommended for temperatures below −25°C. They can be also used in parallel with aluminium electrolytics. The value of the tantalum capacitor should be about 10% or 20% of the total capacitance. The output capacitor should have at least 50% higher RMS ripple current rating at 150 kHz than the peak−to−peak inductor ripple current.

Catch Diode

Locate the Catch Diode Close to the LM2595

The LM2595 is a step−down buck converter; it requires a fast diode to provide a return path for the inductor current when the switch turns off. This diode must be located close to the LM2595 using short leads and short printed circuit traces to avoid EMI problems.

Use a Schottky or a Soft Switching Ultra−Fast Recovery Diode

Since the rectifier diodes are very significant sources of losses within switching power supplies, choosing the rectifier that best fits into the converter design is an important process. Schottky diodes provide the best performance because of their fast switching speed and low forward voltage drop.

They provide the best efficiency especially in low output voltage applications (5.0 V and lower). Another choice could be Fast−Recovery, or Ultra−Fast Recovery diodes. It has to be noted, that some types of these diodes with an abrupt turnoff characteristic may cause instability or EMI troubles.

A fast−recovery diode with soft recovery characteristics can better fulfill some quality, low noise design requirements. Table 2 provides a list of suitable diodes for the LM2595 regulator. Standard 50/60 Hz rectifier diodes, such as the 1N4001 series or 1N5400 series are **NOT** suitable.

Inductor

The magnetic components are the cornerstone of all switching power supply designs. The style of the core and the winding technique used in the magnetic component's design has a great influence on the reliability of the overall power supply.

Using an improper or poorly designed inductor can cause high voltage spikes generated by the rate of transitions in current within the switching power supply, and the possibility of core saturation can arise during an abnormal operational mode. Voltage spikes can cause the semiconductors to enter avalanche breakdown and the part can instantly fail if enough energy is applied. It can also cause significant RFI (Radio Frequency Interference) and EMI (Electro−Magnetic Interference) problems.

Continuous and Discontinuous Mode of Operation

The LM2595 step−down converter can operate in both the continuous and the discontinuous modes of operation. The regulator works in the continuous mode when loads are relatively heavy, the current flows through the inductor continuously and never falls to zero. Under light load conditions, the circuit will be forced to the discontinuous mode when inductor current falls to zero for certain period of time (see Figure 20 and Figure 21). Each mode has distinctively different operating characteristics, which can affect the regulator performance and requirements. In many cases the preferred mode of operation is the continuous mode. It offers greater output power, lower peak currents in the switch, inductor and diode, and can have a lower output ripple voltage. On the other hand it does require larger inductor values to keep the inductor current flowing continuously, especially at low output load currents and/or high input voltages.

To simplify the inductor selection process, an inductor selection guide for the LM2595 regulator was added to this data sheet (Figure 19). This guide assumes that the regulator is operating in the continuous mode, and selects an inductor that will allow a peak−to−peak inductor ripple current to be a certain percentage of the maximum design load current. This percentage is allowed to change as different design load currents are selected. For light loads (less than approximately 300 mA) it may be desirable to operate the regulator in the discontinuous mode, because the inductor value and size can be kept relatively low. Consequently, the percentage of inductor peak−to−peak current increases. This discontinuous mode of operation is perfectly acceptable for this type of switching converter. Any buck regulator will be forced to enter discontinuous mode if the load current is light enough.

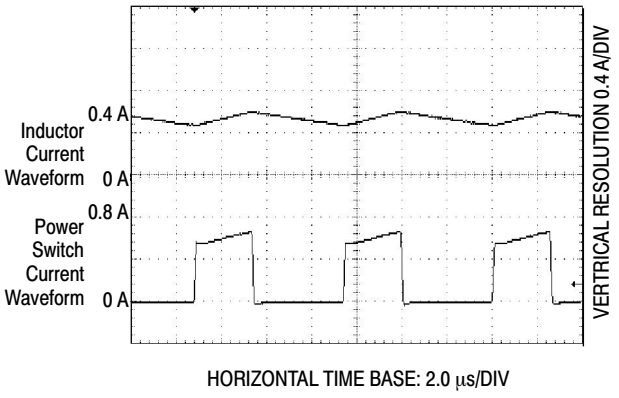

Figure 20. Continuous Mode Switching Current Waveforms

Selecting the Right Inductor Style

Some important considerations when selecting a core type are core material, cost, the output power of the power supply, the physical volume the inductor must fit within, and the amount of EMI (Electro−Magnetic Interference) shielding that the core must provide. The inductor selection guide covers different styles of inductors, such as pot core, E−core, toroid and bobbin core, as well as different core materials such as ferrites and powdered iron from different manufacturers.

For high quality design regulators the toroid core seems to be the best choice. Since the magnetic flux is contained within the core, it generates less EMI, reducing noise problems in sensitive circuits. The least expensive is the bobbin core type, which consists of wire wound on a ferrite rod core. This type of inductor generates more EMI due to the fact that its core is open, and the magnetic flux is not contained within the core.

When multiple switching regulators are located on the same printed circuit board, open core magnetics can cause

interference between two or more of the regulator circuits, especially at high currents due to mutual coupling. A toroid, pot core or E−core (closed magnetic structure) should be used in such applications.

Do Not Operate an Inductor Beyond its Maximum Rated Current

Exceeding an inductor's maximum current rating may cause the inductor to overheat because of the copper wire losses, or the core may saturate. Core saturation occurs when the flux density is too high and consequently the cross sectional area of the core can no longer support additional lines of magnetic flux.

This causes the permeability of the core to drop, the inductance value decreases rapidly and the inductor begins to look mainly resistive. It has only the DC resistance of the winding. This can cause the switch current to rise very rapidly and force the LM2595 internal switch into cycle−by−cycle current limit, thus reducing the DC output load current. This can also result in overheating of the inductor and/or the LM2595. Different inductor types have different saturation characteristics, and this should be kept in mind when selecting an inductor.

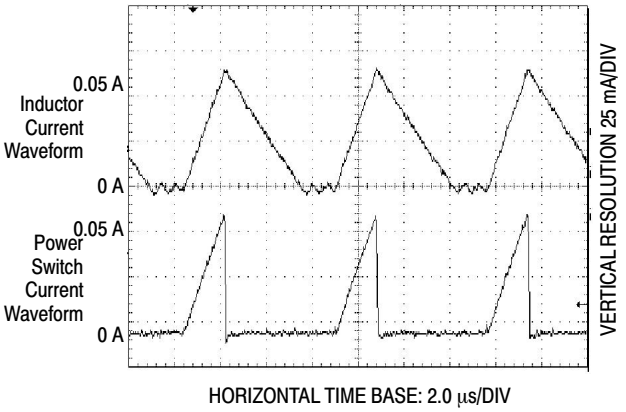

Figure 21. Discontinuous Mode Switching Current Waveforms

GENERAL RECOMMENDATIONS

Output Voltage Ripple and Transients

Source of the Output Ripple

Since the LM2595 is a switch mode power supply regulator, its output voltage, if left unfiltered, will contain a sawtooth ripple voltage at the switching frequency. The output ripple voltage value ranges from 0.5% to 3% of the output voltage. It is caused mainly by the inductor sawtooth ripple current multiplied by the ESR of the output capacitor.

Short Voltage Spikes and How to Reduce Them

The regulator output voltage may also contain short voltage spikes at the peaks of the sawtooth waveform (see Figure 22). These voltage spikes are present because of the fast switching action of the output switch, and the parasitic inductance of the output filter capacitor. There are some other important factors such as wiring inductance, stray capacitance, as well as the scope probe used to evaluate these transients, all these contribute to the amplitude of these spikes. To minimize these voltage spikes, low inductance capacitors should be used, and their lead lengths must be kept short. The importance of quality printed circuit board layout design should also be highlighted.

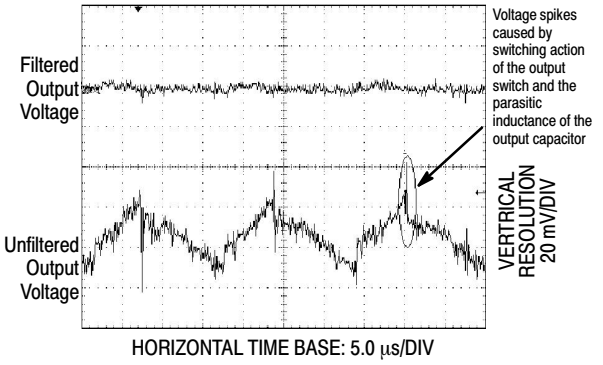

Figure 22. Output Ripple Voltage Waveforms

Minimizing the Output Ripple

In order to minimize the output ripple voltage it is possible to enlarge the inductance value of the inductor L1 and/or to use a larger value output capacitor. There is also another way to smooth the output by means of an additional LC filter (3 μH, 100 μF), that can be added to the output (see Figure 31) to further reduce the amount of output ripple and transients. With such a filter it is possible to reduce the output ripple voltage transients 10 times or more. Figure 22 shows the difference between filtered and unfiltered output waveforms of the regulator shown in Figure 31.

The lower waveform is from the normal unfiltered output of the converter, while the upper waveform shows the output ripple voltage filtered by an additional LC filter.

The Surface Mount Package D2PAK and its Heatsinking

The other type of package, the surface mount D2PAK, is designed to be soldered to the copper on the PC board. The copper and the board are the heatsink for this package and the other heat producing components, such as the catch diode and inductor. The PC board copper area that the package is soldered to should be at least 0.4 in^2 (or 100 mm^2) and ideally should have 2 or more square inches (1300 mm^2) of 0.0028 inch copper. Additional increasing of copper area beyond approximately 3.0 in^2 (2000 mm^2) will not improve heat dissipation significantly. If further thermal improvements are needed, double sided or multilayer PC boards with large copper areas should be considered.

Thermal Analysis and Design

The following procedure must be performed to determine the operating junction temperature. First determine:

1. $P_{D(max)}$ maximum regulator power dissipation in the application.
2. $T_{A(max)}$ maximum ambient temperature in the application.

3. $T_{J(max)}$ maximum allowed junction temperature (125°C for the LM2595). For a conservative design, the maximum junction temperature should not exceed 110°C to assure safe operation. For every additional +10°C temperature rise that the junction must withstand, the estimated operating lifetime of the component is halved.
4. $R_{\theta JC}$ package thermal resistance junction−case.
5. $R_{\theta JA}$ package thermal resistance junction−ambient.

(Refer to Maximum Ratings on page 2 of this data sheet or $R_{\theta JC}$ and $R_{\theta JA}$ values).

The following formula is to calculate the approximate total power dissipated by the LM2595:

$$P_D = (V_{in} \times I_Q) + d \times I_{Load} \times V_{sat}$$

where d is the duty cycle and for buck converter

$$d = \frac{t_{on}}{T} = \frac{V_O}{V_{in}},$$

I_Q (quiescent current) and V_{sat} can be found in the LM2595 data sheet,
V_{in} is minimum input voltage applied,
V_O is the regulator output voltage,
I_{Load} is the load current.

The dynamic switching losses during turn−on and turn−off can be neglected if proper type catch diode is used.

The junction temperature can be determined by the following expression:

$$T_J = (R_{\theta JA})\ (P_D) + T_A$$

where $(R_{\theta JA})(P_D)$ represents the junction temperature rise caused by the dissipated power and T_A is the maximum ambient temperature.

Packages Not on a Heatsink (Free−Standing)

For a free−standing application when no heatsink is used, the junction temperature can be determined by the following expression:

$$T_J = (R_{\theta JA})\ (P_D) + T_A$$

Where $(R_{\theta JA})\ (P_D)$ represents the junction temperature rise caused by the dissipated power and T_A is the maximum ambient temperature.

Packages on a Heatsink

If the actual operating junction temperature is greater than the selected safe operating junction temperature determined in step 3, than a heatsink is required. The junction temperature will be calculated as follows:

$$T_J = P_D\ (R_{\theta JA} + R_{\theta CS} + R_{\theta SA}) + T_A$$

Where $R_{\theta JC}$ is the thermal resistance junction−case,
$R_{\theta CS}$ is the thermal resistance case−heatsink,
$R_{\theta SA}$ is the thermal resistance heatsink−ambient.
If the actual operating temperature is greater than the selected safe operating junction temperature, then a larger heatsink is required.

Some Aspects That can Influence Thermal Design

It should be noted that the package thermal resistance and the junction temperature rise numbers are all approximate, and there are many factors that will affect these numbers, such as PC board size, shape, thickness, physical position, location, board temperature, as well as whether the surrounding air is moving or still.

Other factors are trace width, total printed circuit copper area, copper thickness, single− or double−sided, multilayer board, the amount of solder on the board or even color of the traces.

The size, quantity and spacing of other components on the board can also influence its effectiveness to dissipate the heat.

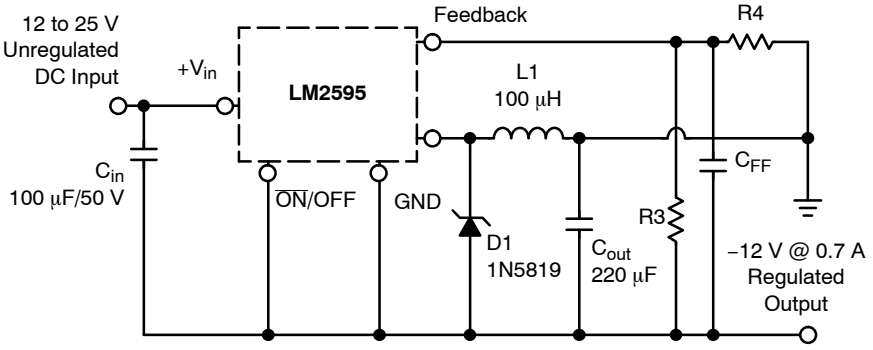

Figure 23. Inverting Buck−Boost Develops −12 V

ADDITIONAL APPLICATIONS

Inverting Regulator

An inverting buck−boost regulator using the LM2595 is shown in Figure 23. This circuit converts a positive input voltage to a negative output voltage with a common ground by bootstrapping the regulators ground to the negative output voltage. By grounding the feedback pin, the regulator senses the inverted output voltage and regulates it.

In this example the LM2595 is used to generate a −12 V output. The maximum input voltage in this case cannot exceed +28 V because the maximum voltage appearing across the regulator is the absolute sum of the input and output voltages and this must be limited to a maximum of 40 V.

This circuit configuration is able to deliver approximately 0.25 A to the output when the input voltage is 12 V or higher. At lighter loads the minimum input voltage required drops to approximately 4.7 V, because the buck−boost regulator topology can produce an output voltage that, in its absolute value, is either greater or less than the input voltage.

Since the switch currents in this buck−boost configuration are higher than in the standard buck converter topology, the available output current is lower.

This type of buck−boost inverting regulator can also require a larger amount of startup input current, even for light loads. This may overload an input power source with a current limit less than 1.0 A.

Such an amount of input startup current is needed for at least 2.0 ms or more. The actual time depends on the output voltage and size of the output capacitor.

Because of the relatively high startup currents required by this inverting regulator topology, the use of a delayed startup or an undervoltage lockout circuit is recommended.

Using a delayed startup arrangement, the input capacitor can charge up to a higher voltage before the switch−mode regulator begins to operate.

The high input current needed for startup is now partially supplied by the input capacitor C_{in}.

It has been already mentioned above, that in some situations, the delayed startup or the undervoltage lockout features could be very useful. A delayed startup circuit applied to a buck−boost converter is shown in Figure 28. Figure 30 in the “Undervoltage Lockout” section describes an undervoltage lockout feature for the same converter topology.

Design Recommendations:

The inverting regulator operates in a different manner than the buck converter and so a different design procedure has to be used to select the inductor L1 or the output capacitor C_{out}.

The output capacitor values must be larger than what is normally required for buck converter designs. Low input voltages or high output currents require a large value output capacitor (in the range of thousands of μF).

The recommended range of inductor values for the inverting converter design is between 68 μH and 220 μH. To select an inductor with an appropriate current rating, the inductor peak current has to be calculated.

The following formula is used to obtain the peak inductor current:

$$I_{peak} \approx \frac{I_{Load}\,(V_{in} + |V_O|)}{V_{in}} + \frac{V_{in} \times t_{on}}{2L_1}$$

$$\text{where } t_{on} = \frac{|V_O|}{V_{in} + |V_O|} \times \frac{1.0}{f_{osc}}, \text{ and } f_{osc} = 52 \text{ kHz}.$$

Under normal continuous inductor current operating conditions, the worst case occurs when V_{in} is minimal.

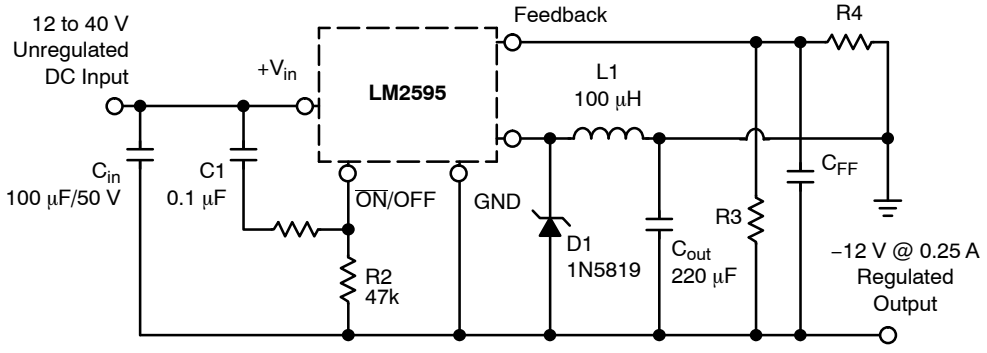

Figure 24. Inverting Buck−Boost Develops with Delayed Startup

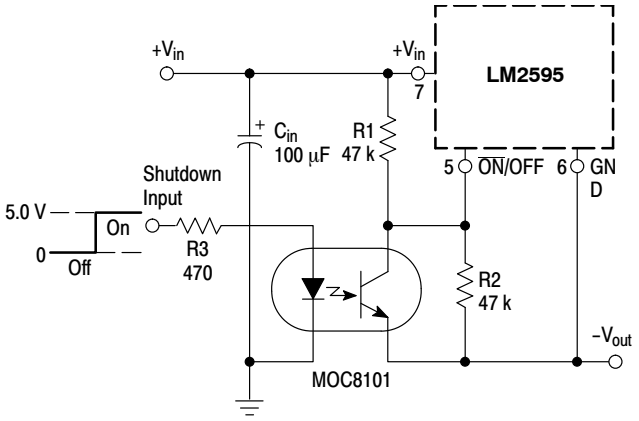

NOTE: This picture does not show the complete circuit.

Figure 25. Inverting Buck−Boost Regulator Shutdown Circuit Using an Optocoupler

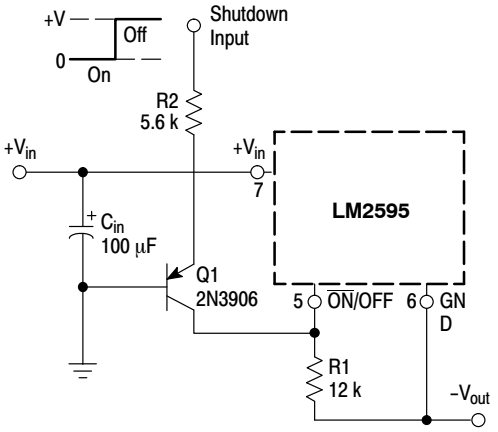

NOTE: This picture does not show the complete circuit.

Figure 26. Inverting Buck−Boost Regulator Shutdown Circuit Using a PNP Transistor

With the inverting configuration, the use of the $\overline{ON}$/OFF pin requires some level shifting techniques. This is caused by the fact, that the ground pin of the converter IC is no longer at ground. Now, the $\overline{ON}$/OFF pin threshold voltage (1.3 V approximately) has to be related to the negative output voltage level. There are many different possible shut down methods, two of them are shown in Figures 25 and 26.

Negative Boost Regulator

This example is a variation of the buck−boost topology and it is called negative boost regulator. This regulator experiences relatively high switch current, especially at low input voltages. The internal switch current limiting results in lower output load current capability.

The circuit in Figure 27 shows the negative boost configuration. The input voltage in this application ranges from −5.0 V to −12 V and provides a regulated −12 V output. If the input voltage is greater than −12 V, the output will rise above −12 V accordingly, but will not damage the regulator.

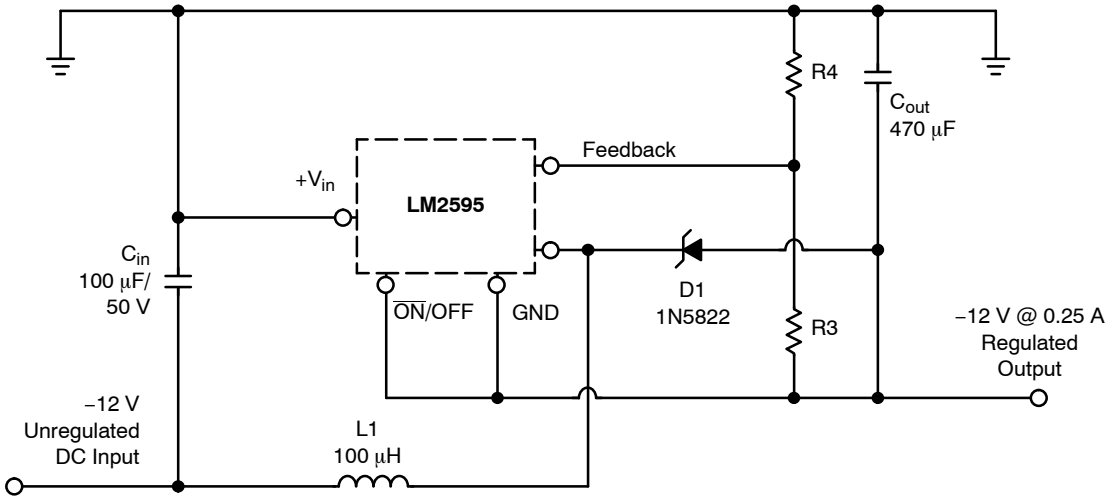

Figure 27. Negative Boost Regulator

Design Recommendations:

The same design rules as for the previous inverting buck−boost converter can be applied. The output capacitor C_{out} must be chosen larger than would be required for a what standard buck converter. Low input voltages or high output currents require a large value output capacitor (in the range of thousands of μF). The recommended range of inductor values for the negative boost regulator is the same as for inverting converter design.

Another important point is that these negative boost converters cannot provide current limiting load protection in the event of a short in the output so some other means, such as a fuse, may be necessary to provide the load protection.

Delayed Startup

There are some applications, like the inverting regulator already mentioned above, which require a higher amount of startup current. In such cases, if the input power source is limited, this delayed startup feature becomes very useful.

To provide a time delay between the time when the input voltage is applied and the time when the output voltage comes up, the circuit in Figure 28 can be used. As the input voltage is applied, the capacitor C1 charges up, and the voltage across the resistor R2 falls down. When the voltage on the $\overline{ON}$/OFF pin falls below the threshold value 1.3 V, the regulator starts up. Resistor R1 is included to limit the maximum voltage applied to the $\overline{ON}$/OFF pin. It reduces the power supply noise sensitivity, and also limits the capacitor C1 discharge current, but its use is not mandatory.

When a high 50 Hz or 60 Hz (100 Hz or 120 Hz respectively) ripple voltage exists, a long delay time can cause some problems by coupling the ripple into the $\overline{ON}$/OFF pin, the regulator could be switched periodically on and off with the line (or double) frequency.

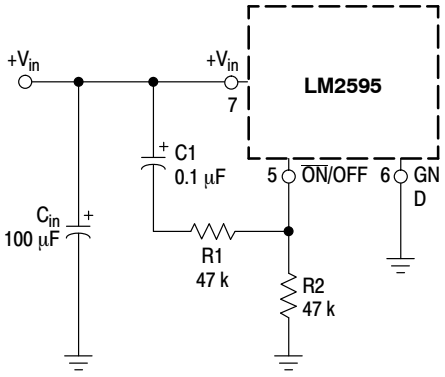

NOTE: This picture does not show the complete circuit.

Figure 28. Delayed Startup Circuitry

Undervoltage Lockout

Some applications require the regulator to remain off until the input voltage reaches a certain threshold level. Figure 29 shows an undervoltage lockout circuit applied to a buck regulator. A version of this circuit for buck−boost converter is shown in Figure 30. Resistor R3 pulls the $\overline{ON}$/OFF pin high and keeps the regulator off until the input voltage reaches a predetermined threshold level with respect to the ground Pin 3, which is determined by the following expression:

$$V_{th} \approx V_{Z1} + \left(1.0 + \frac{R2}{R1}\right) V_{BE}\ (Q1)$$

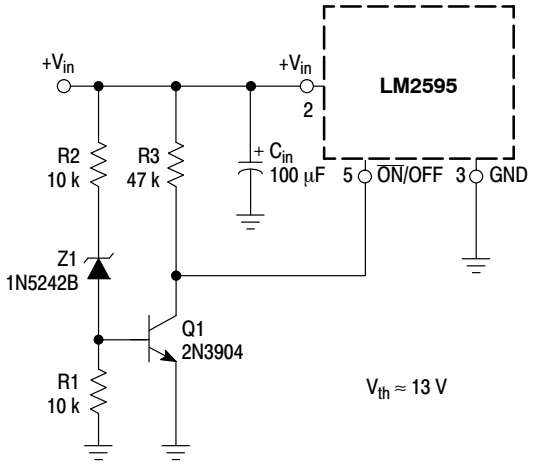

NOTE: This picture does not show the complete circuit.

Figure 29. Undervoltage Lockout Circuit for Buck Converter

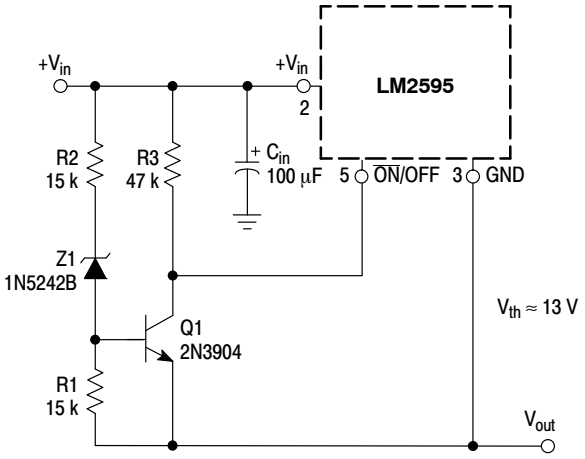

NOTE: This picture does not show the complete circuit.

Figure 30. Undervoltage Lockout Circuit for Buck−Boost Converter

Adjustable Output, Low−Ripple Power Supply

A 1.0 A output current capability power supply that features an adjustable output voltage is shown in Figure 31.

This regulator delivers 1.0 A into 1.2 V to 35 V output. The input voltage ranges from roughly 3.0 V to 40 V. In order to achieve a 10 or more times reduction of output ripple, an additional L−C filter is included in this circuit.

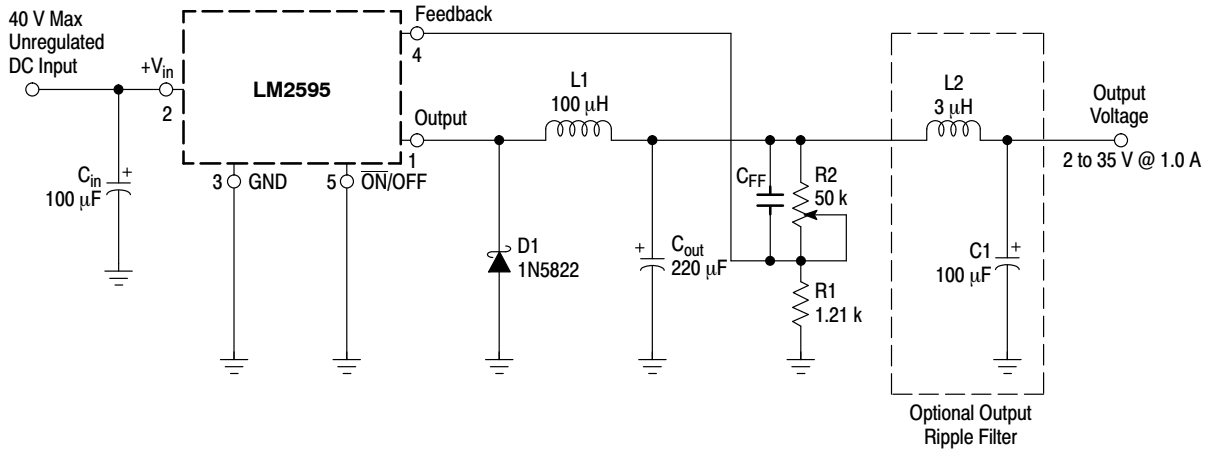

Figure 31. 2 to 35 V Adjustable 1.0 A Power Supply with Low Output Ripple

THE LM2595 STEP−DOWN VOLTAGE REGULATOR WITH 5.0 V @ 1.0 A OUTPUT POWER CAPABILITY. TYPICAL APPLICATION WITH THROUGH−HOLE PC BOARD LAYOUT

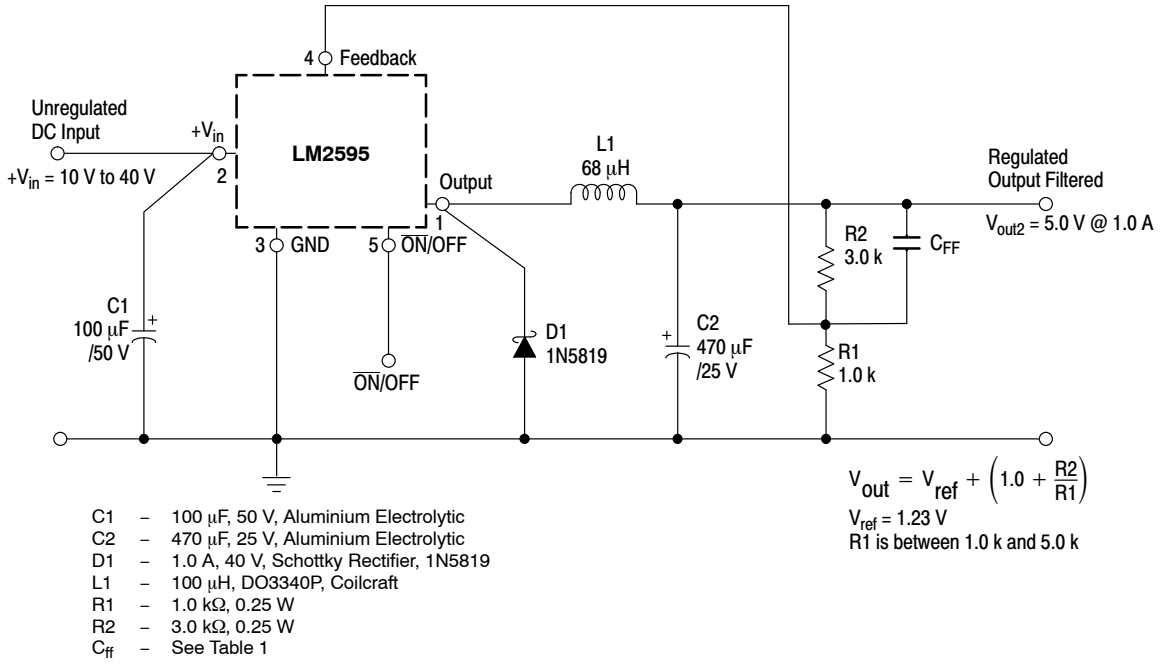

C1 – 100 μF, 50 V, Aluminium Electrolytic
C2 – 470 μF, 25 V, Aluminium Electrolytic
D1 – 1.0 A, 40 V, Schottky Rectifier, 1N5819
L1 – 100 μH, DO3340P, Coilcraft
R1 – 1.0 kΩ, 0.25 W
R2 – 3.0 kΩ, 0.25 W
C_{ff} – See Table 1

Figure 32. Schematic Diagram of the 5.0 V @ 1.0 A Step−Down Converter Using the LM2595−ADJ

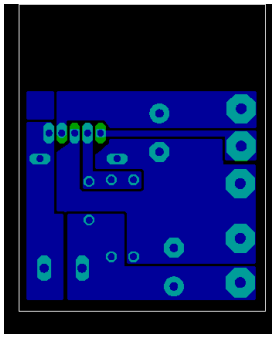

NOTE: Not to scale.

Figure 33. Printed Circuit Board Layout With Component

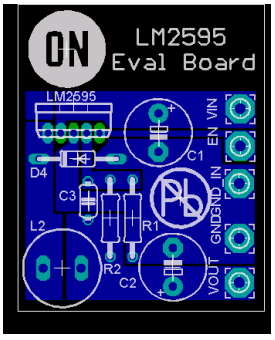

NOTE: Not to scale.

Figure 34. Printed Circuit Board Layout Copper Side

References

- National Semiconductor LM2595 Data Sheet and Application Note
- National Semiconductor LM2595 Data Sheet and Application Note
- Marty Brown “Practical Switching Power Supply Design”, Academic Press, Inc., San Diego 1990
- Ray Ridley “High Frequency Magnetics Design”, Ridley Engineering, Inc. 1995

ORDERING INFORMATION

Device	Package	Shipping†
LM2595TADJG	TO−220 (Pb−Free)	50 Units / Rail
LM2595TVADJG	TO−220 (F) (Pb−Free)	50 Units / Rail
LM2595DSADJG	D^2PAK (Pb−Free)	50 Units / Rail
LM2595DSADJR4G	D^2PAK (Pb−Free)	800 / Tape & Reel

†For information on tape and reel specifications, including part orientation and tape sizes, please refer to our Tape and Reel Packaging Specifications Brochure, BRD8011/D.

MARKING DIAGRAMS

TO−220
TV SUFFIX
CASE 314B

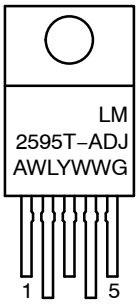

TO−220
T SUFFIX
CASE 314D

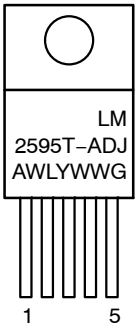

D^2PAK
DS SUFFIX
CASE 936A

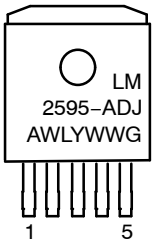

A = Assembly Location
WL = Wafer Lot
Y = Year
WW = Work Week
G = Pb−Free Package

PACKAGE DIMENSIONS

TO−220
TV SUFFIX
CASE 314B−05
ISSUE L

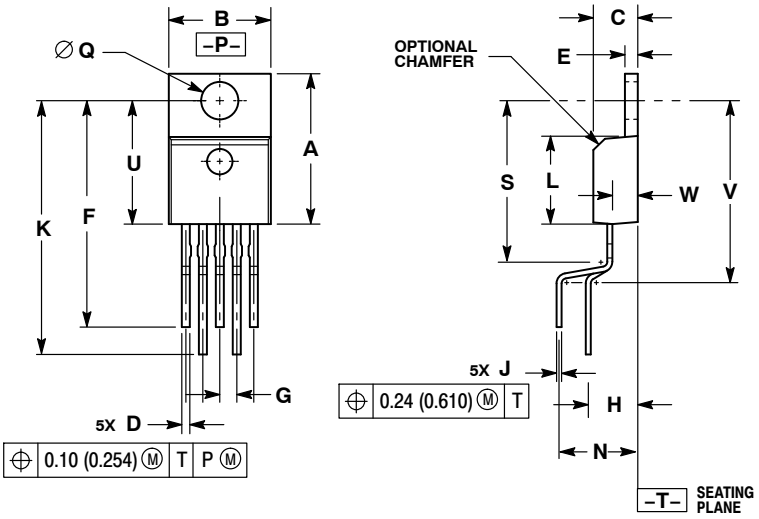

NOTES:
1. DIMENSIONING AND TOLERANCING PER ANSI Y14.5M, 1982.
2. CONTROLLING DIMENSION: INCH.
3. DIMENSION D DOES NOT INCLUDE INTERCONNECT BAR (DAMBAR) PROTRUSION. DIMENSION D INCLUDING PROTRUSION SHALL NOT EXCEED 0.043 (1.092) MAXIMUM.

	INCHES		MILLIMETERS	
DIM	MIN	MAX	MIN	MAX
A	0.572	0.613	14.529	15.570
B	0.390	0.415	9.906	10.541
C	0.170	0.180	4.318	4.572
D	0.025	0.038	0.635	0.965
E	0.048	0.055	1.219	1.397
F	0.850	0.935	21.590	23.749
G	0.067 BSC		1.702 BSC	
H	0.166 BSC		4.216 BSC	
J	0.015	0.025	0.381	0.635
K	0.900	1.100	22.860	27.940
L	0.320	0.365	8.128	9.271
N	0.320 BSC		8.128 BSC	
Q	0.140	0.153	3.556	3.886
S	---	0.620	---	15.748
U	0.468	0.505	11.888	12.827
V	---	0.735	---	18.669
W	0.090	0.110	2.286	2.794

TO−220
T SUFFIX
CASE 314D−04
ISSUE F

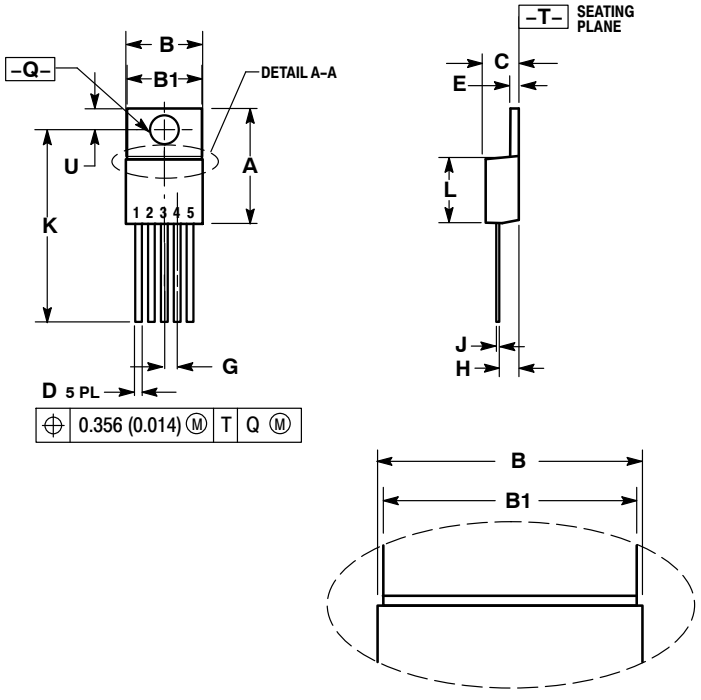

NOTES:
1. DIMENSIONING AND TOLERANCING PER ANSI Y14.5M, 1982.
2. CONTROLLING DIMENSION: INCH.
3. DIMENSION D DOES NOT INCLUDE INTERCONNECT BAR (DAMBAR) PROTRUSION. DIMENSION D INCLUDING PROTRUSION SHALL NOT EXCEED 10.92 (0.043) MAXIMUM.

	INCHES		MILLIMETERS	
DIM	MIN	MAX	MIN	MAX
A	0.572	0.613	14.529	15.570
B	0.390	0.415	9.906	10.541
B1	0.375	0.415	9.525	10.541
C	0.170	0.180	4.318	4.572
D	0.025	0.038	0.635	0.965
E	0.048	0.055	1.219	1.397
G	0.067 BSC		1.702 BSC	
H	0.087	0.112	2.210	2.845
J	0.015	0.025	0.381	0.635
K	0.977	1.045	24.810	26.543
L	0.320	0.365	8.128	9.271
Q	0.140	0.153	3.556	3.886
U	0.105	0.117	2.667	2.972

PACKAGE DIMENSIONS

D²PAK
D2T SUFFIX
CASE 936A−02
ISSUE C

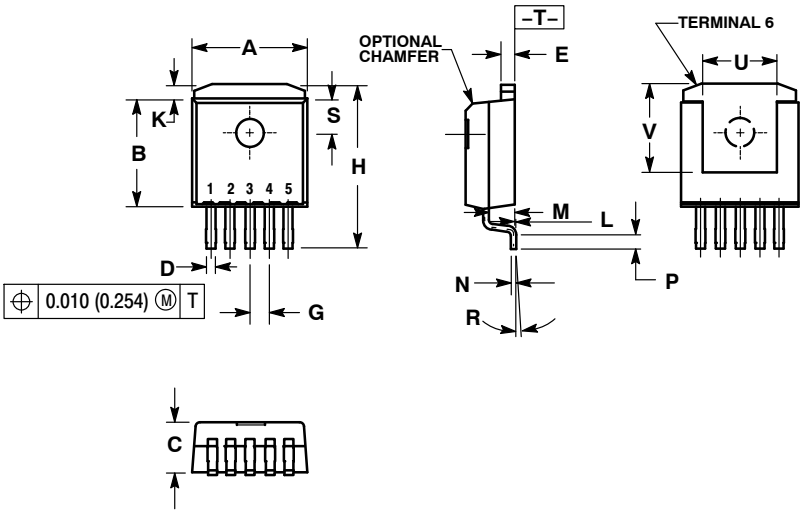

NOTES:
1. DIMENSIONING AND TOLERANCING PER ANSI Y14.5M, 1982.
2. CONTROLLING DIMENSION: INCH.
3. TAB CONTOUR OPTIONAL WITHIN DIMENSIONS A AND K.
4. DIMENSIONS U AND V ESTABLISH A MINIMUM MOUNTING SURFACE FOR TERMINAL 6.
5. DIMENSIONS A AND B DO NOT INCLUDE MOLD FLASH OR GATE PROTRUSIONS. MOLD FLASH AND GATE PROTRUSIONS NOT TO EXCEED 0.025 (0.635) MAXIMUM.

	INCHES		MILLIMETERS	
DIM	MIN	MAX	MIN	MAX
A	0.386	0.403	9.804	10.236
B	0.356	0.368	9.042	9.347
C	0.170	0.180	4.318	4.572
D	0.026	0.036	0.660	0.914
E	0.045	0.055	1.143	1.397
G	0.067 BSC		1.702 BSC	
H	0.539	0.579	13.691	14.707
K	0.050 REF		1.270 REF	
L	0.000	0.010	0.000	0.254
M	0.088	0.102	2.235	2.591
N	0.018	0.026	0.457	0.660
P	0.058	0.078	1.473	1.981
R	5° REF		5° REF	
S	0.116 REF		2.946 REF	
U	0.200 MIN		5.080 MIN	
V	0.250 MIN		6.350 MIN	

SOLDERING FOOTPRINT*

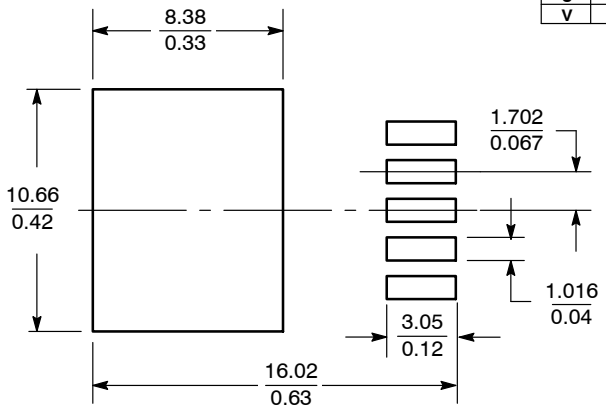

SCALE 3:1 $\left(\frac{\text{mm}}{\text{inches}}\right)$

*For additional information on our Pb−Free strategy and soldering details, please download the ON Semiconductor Soldering and Mounting Techniques Reference Manual, SOLDERRM/D.

ON Semiconductor and ON are registered trademarks of Semiconductor Components Industries, LLC (SCILLC). SCILLC reserves the right to make changes without further notice to any products herein. SCILLC makes no warranty, representation or guarantee regarding the suitability of its products for any particular purpose, nor does SCILLC assume any liability arising out of the application or use of any product or circuit, and specifically disclaims any and all liability, including without limitation special, consequential or incidental damages. "Typical" parameters which may be provided in SCILLC data sheets and/or specifications can and do vary in different applications and actual performance may vary over time. All operating parameters, including "Typicals" must be validated for each customer application by customer's technical experts. SCILLC does not convey any license under its patent rights nor the rights of others. SCILLC products are not designed, intended, or authorized for use as components in systems intended for surgical implant into the body, or other applications intended to support or sustain life, or for any other application in which the failure of the SCILLC product could create a situation where personal injury or death may occur. Should Buyer purchase or use SCILLC products for any such unintended or unauthorized application, Buyer shall indemnify and hold SCILLC and its officers, employees, subsidiaries, affiliates, and distributors harmless against all claims, costs, damages, and expenses, and reasonable attorney fees arising out of, directly or indirectly, any claim of personal injury or death associated with such unintended or unauthorized use, even if such claim alleges that SCILLC was negligent regarding the design or manufacture of the part. SCILLC is an Equal Opportunity/Affirmative Action Employer. This literature is subject to all applicable copyright laws and is not for resale in any manner.

PUBLICATION ORDERING INFORMATION

LITERATURE FULFILLMENT:
Literature Distribution Center for ON Semiconductor
P.O. Box 5163, Denver, Colorado 80217 USA
Phone: 303−675−2175 or 800−344−3860 Toll Free USA/Canada
Fax: 303−675−2176 or 800−344−3867 Toll Free USA/Canada
Email: orderlit@onsemi.com

N. American Technical Support: 800−282−9855 Toll Free USA/Canada
Europe, Middle East and Africa Technical Support:
Phone: 421 33 790 2910
Japan Customer Focus Center
Phone: 81−3−5773−3850

ON Semiconductor Website: **www.onsemi.com**

Order Literature: http://www.onsemi.com/orderlit

For additional information, please contact your local Sales Representative