LM25019 48-V, 100-mA Constant On-Time Synchronous Buck Regulator

1 Features

- Wide 7.5-V to 48-V Input Range
- Integrated 100-mA High-Side and Low-Side Switches
- No Schottky Required
- Constant On-Time Control
- No Loop Compensation Required
- Ultra-Fast Transient Response
- Nearly Constant Operating Frequency
- Intelligent Peak Current Limit
- Adjustable Output Voltage From 1.225 V
- Precision 2% Feedback Reference
- Frequency Adjustable to 1 MHz
- Adjustable Undervoltage Lockout
- Remote Shutdown
- Thermal Shutdown
- Packages:
  - 8-Pin WSON
  - 8-Pin SO PowerPAD™

2 Applications

- Industrial Equipments
- Smart Power Meters
- Telecommunication Systems
- Isolated Bias Supply

3 Description

The LM25019 is a 48-V, 100-mA synchronous step-down regulator with integrated high-side and low-side MOSFETs. The constant on-time (COT) control scheme employed in the LM25019 requires no loop compensation, provides excellent transient response, and enables very high step-down ratios. The on-time varies inversely with the input voltage resulting in nearly constant frequency over the input voltage range. A high-voltage start-up regulator provides bias power for internal operation of the IC and for integrated gate drivers.

A peak current limit circuit protects against overload conditions. The undervoltage lockout (UVLO) circuit allows the input undervoltage threshold and hysteresis to be independently programmed. Other protection features include thermal shutdown and bias supply undervoltage lockout.

The LM25019 is available in 8-pin WSON and 8-pin SO PowerPAD plastic packages.

Device Information(1)

PART NUMBER	PACKAGE	BODY SIZE (NOM)
LM25019	SO PowerPAD (8)	4.89 mm x 3.90 mm
	WSON (8)	4.00 mm x 4.00 mm

(1) For all available packages, see the orderable addendum at the end of the data sheet.

Typical Application

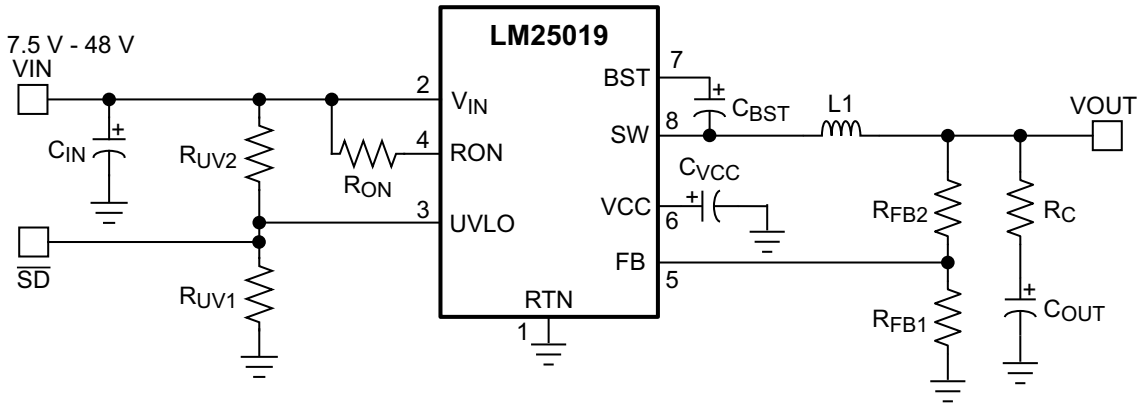

An IMPORTANT NOTICE at the end of this data sheet addresses availability, warranty, changes, use in safety-critical applications, intellectual property matters and other important disclaimers. PRODUCTION DATA.

Table of Contents

1 Features ... 1
2 Applications ... 1
3 Description ... 1
4 Revision History ... 2
5 Pin Configuration and Functions ... 4
6 Specifications ... 5
6.1 Absolute Maximum Ratings ... 5
6.2 ESD Ratings ... 5
6.3 Recommended Operating Conditions ... 5
6.4 Thermal Information ... 5
6.5 Electrical Characteristics ... 6
6.6 Switching Characteristics ... 6
6.7 Typical Characteristics ... 7
7 Detailed Description ... 9
7.1 Overview ... 9
7.2 Functional Block Diagram ... 9
7.3 Feature Description ... 10
7.4 Device Functional Modes ... 15
8 Application and Implementation ... 16
8.1 Application Information ... 16
8.2 Typical Application ... 16
9 Power Supply Recommendations ... 20
10 Layout ... 20
10.1 Layout Guidelines ... 20
10.2 Layout Example ... 20
11 Device and Documentation Support ... 21
11.1 Documentation Support ... 21
11.2 Community Resources ... 21
11.3 Trademarks ... 21
11.4 Electrostatic Discharge Caution ... 21
11.5 Glossary ... 21
12 Mechanical, Packaging, and Orderable Information ... 21

4 Revision History

Changes from Revision D (December 2014) to Revision E — **Page**

- Changed 14 V to 13 V in V_{CC} *Regulator* section ... 10
- Changed 8 to 4 on equation in *Input Capacitor* section ... 18
- Changed 0.06 µF to 0.12 µF in *Input Capacitor* section ... 18

Changes from Revision C (December 2013) to Revision D — **Page**

- Added *Pin Configuration and Functions* section, *ESD Rating* table, *Feature Description* section, *Device Functional Modes*, *Application and Implementation* section, *Power Supply Recommendations* section, *Layout* section, *Device and Documentation Support* section, and *Mechanical, Packaging, and Orderable Information* section ... 1
- Changed *Soft-Start Circuit* graphic ... 14
- Changed *Frequency Selection* section, *Inductor Selection* section, *Output Capacitor* section, *Input Capacitor* section, and *UVLO Resistors* section ... 17
- Changed *Series Ripple Resistor* R_C section to *Type III Ripple Circuit* ... 18

Changes from Revision B (December 2013) to Revision C — **Page**

- Added Thermal Parameters ... 5

Changes from Revision A (September 2013) to Revision B — **Page**

- Changed formatting throughout document to the TI standard ... 1
- Changed minimum operating input voltage from 9 V to 7.5 V in *Features* ... 1
- Changed minimum operating input voltage from 9 V to 7.5 V in *Typical Application* ... 1
- Changed minimum operating input voltage from 9 V to 7.5 V in *Pin Descriptions* ... 4
- Added Absolute Maximum Junction Temperature ... 5
- Changed minimum operating input voltage from 9 V to 7.5 V in *Recommended Operating Conditions* ... 5

Copyright © 2012–2015, Texas Instruments Incorporated

Changes from Original (December 2012) to Revision A **Page**

- Added SW to RTN (100 ns transient) in *Absolute Maximum Ratings* table 5

Copyright © 2012–2015, Texas Instruments Incorporated

5 Pin Configuration and Functions

8-Pin SO PowerPAD
DDA Package
Top View

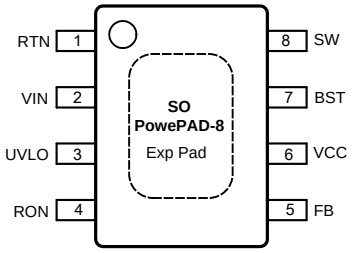

8-Pin WSON
NGU Package
Top View

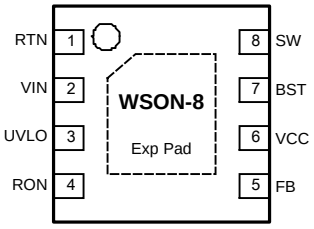

Pin Functions

PIN		I/O	DESCRIPTION	APPLICATION INFORMATION
NO.	NAME			
1	RTN	—	Ground	Ground connection of the integrated circuit.
2	VIN	I	Input Voltage	Operating input range is 7.5 V to 48 V.
3	UVLO	I	Input Pin of Undervoltage Comparator	Resistor divider from V_{IN} to UVLO to GND programs the undervoltage detection threshold. An internal current source is enabled when UVLO is above 1.225 V to provide hysteresis. When UVLO pin is pulled below 0.66 V externally, the regulator is in shutdown mode.
4	RON	I	On-Time Control	A resistor between this pin and V_{IN} sets the buck switch on-time as a function of V_{IN}. Minimum recommended on-time is 100 ns at max input voltage.
5	FB	I	Feedback	This pin is connected to the inverting input of the internal regulation comparator. The regulation level is 1.225 V.
6	VCC	O	Output from the Internal High Voltage Series Pass Regulator. Regulated at 7.6 V	The internal V_{CC} regulator provides bias supply for the gate drivers and other internal circuitry. A 1.0-µF decoupling capacitor is recommended.
7	BST	I	Bootstrap Capacitor	An external capacitor is required between the BST and SW pins (0.01-µF ceramic). The BST pin capacitor is charged by the V_{CC} regulator through an internal diode when the SW pin is low.
8	SW	O	Switching Node	Power switching node. Connect to the output inductor and bootstrap capacitor.
—	EP	—	Exposed Pad	Exposed pad must be connected to the RTN pin. Solder to the system ground plane on application board for reduced thermal resistance.

Copyright © 2012–2015, Texas Instruments Incorporated

6 Specifications

6.1 Absolute Maximum Ratings(1)

	MIN	MAX	UNIT
V_{IN}, UVLO to RTN	–0.3	53	V
SW to RTN	–1.5	V_{IN} + 0.3	V
SW to RTN (100 ns transient)	–5	V_{IN} + 0.3	V
BST to VCC		53	V
BST to SW		13	V
RON to RTN	–0.3	53	V
VCC to RTN	–0.3	13	V
FB to RTN	–0.3	5	V
Lead Temperature(2)		200	°C
Maximum Junction Temperature(3)		150	°C
Storage temperature, T_{stg}	–55	150	°C

(1) *Absolute Maximum Ratings* are limits beyond which damage to the device may occur. *Recommended Operating Conditions* are conditions under which operation of the device is intended to be functional. For specifications and test conditions, see *Electrical Characteristics* . The RTN pin is the GND reference electrically connected to the substrate.
(2) For detailed information on soldering plastic SO Power PAD-8 package, refer to the Packaging Data Book available from Texas Instruments. Max solder time not to exceed 4 seconds.
(3) High junction temperatures degrade operating lifetimes. Operating lifetime is de-rated for junction temperatures greater than 125°C.

6.2 ESD Ratings

		VALUE	UNIT
$V_{(ESD)}$ Electrostatic discharge	Human-body model (HBM), per ANSI/ESDA/JEDEC JS-001(1)	±2000	V
	Charged-device model (CDM), per JEDEC specification JESD22-C101(2)	±750	

(1) JEDEC document JEP155 states that 500-V HBM allows safe manufacturing with a standard ESD control process.
(2) JEDEC document JEP157 states that 250-V CDM allows safe manufacturing with a standard ESD control process.

6.3 Recommended Operating Conditions

over operating free-air temperature range (unless otherwise noted)(1)

	MIN	MAX	UNIT
V_{IN} Voltage	7.5	48	V
Operating Junction Temperature(2)	−40	125	°C

(1) *Recommended Operating Conditions* are conditions under the device is intended to be functional. For specifications and test conditions, see *Electrical Characteristics*.
(2) High junction temperatures degrade operating lifetimes. Operating lifetime is de-rated for junction temperatures greater than 125°C.

6.4 Thermal Information

THERMAL METRICS(1)		LM25019		UNIT
		WSON NGU	SO PowerPAD DDA	
		8 PINS		
$R_{\theta JA}$	Junction-to-ambient thermal resistance	41.3	41.1	°C/W
$R_{\theta JC}$(bot)	Junction-to-case (bottom) thermal resistance	3.2	2.4	°C/W
Ψ_{JB}	Junction-to-board thermal characteristic parameter	19.2	24.4	°C/W
$R_{\theta JB}$	Junction-to-board thermal resistance	19.1	30.6	°C/W
$R_{\theta JC}$(top)	Junction-to-case (top) thermal resistance	34.7	37.3	°C/W
Ψ_{JT}	Junction-to-top thermal characteristic parameter	0.3	6.7	°C/W

(1) For more information about traditional and new thermal metrics, see the *IC Package Thermal Metrics* application report (SPRA953).

Copyright © 2012–2015, Texas Instruments Incorporated

6.5 Electrical Characteristics

Typical values correspond to T_J = 25°C. Minimum and maximum limits apply over –40°C to 125°C junction temperature range unless otherwise stated. V_{IN} = 48V unless stated otherwise. See(1).

PARAMETER		CONDITIONS	MIN	TYP	MAX	UNIT
V_{CC} SUPPLY						
V_{CC} Reg	V_{CC} Regulator Output	V_{IN} = 48 V, I_{CC} = 20 mA	6.25	7.6	8.55	V
	V_{CC} Current Limit	V_{IN} = 48 V(2)	26			mA
	V_{CC} Undervoltage Lockout Voltage (V_{CC} Increasing)		4.15	4.5	4.9	V
	V_{CC} Undervoltage Hysteresis			300		mV
	V_{CC} Drop Out Voltage	V_{IN} = 9 V, I_{CC} = 20 mA		2.3		V
	I_{IN} Operating Current	Nonswitching, FB = 3 V		1.75		mA
	I_{IN} Shutdown Current	UVLO = 0 V		50	225	µA
SWITCH CHARACTERISTICS						
	Buck Switch $R_{DS(ON)}$	I_{TEST} = 100 mA, BST-SW = 7 V		0.8	1.8	Ω
	Synchronous $R_{DS(ON)}$	I_{TEST} = 200 mA		0.45	1	Ω
	Gate Drive UVLO	$V_{BST} - V_{SW}$ Rising	2.4	3	3.6	V
	Gate Drive UVLO Hysteresis			260		mV
CURRENT LIMIT						
	Current Limit Threshold		150	270	370	mA
	Current Limit Response Time	Time to Switch Off		150		ns
	Off-Time Generator (Test 1)	FB = 0.1 V, V_{IN} = 48 V		12		µs
	Off-Time Generator (Test 2)	FB = 1 V, V_{IN} = 48 V		2.5		µs
REGULATION AND OVERVOLTAGE COMPARATORS						
	FB Regulation Level	Internal Reference Trip Point for Switch ON	1.2	1.225	1.25	V
	FB Overvoltage Threshold	Trip Point for Switch OFF		1.62		V
	FB Bias Current			60		nA
UNDERVOLTAGE SENSING FUNCTION						
	UV Threshold	UV Rising	1.19	1.225	1.26	V
	UV Hysteresis Input Current	UV = 2.5 V	–10	–20	–29	µA
	Remote Shutdown Threshold	Voltage at UVLO Falling	0.32	0.66		V
	Remote Shutdown Hysteresis			110		mV
THERMAL SHUTDOWN						
T_{sd}	Thermal Shutdown Temperature			165		°C
	Thermal Shutdown Hysteresis			20		°C

(1) All hot and cold limits are specified by correlating the electrical characteristics to process and temperature variations and applying statistical process control.
(2) V_{CC} provides self bias for the internal gate drive and control circuits. Device thermal limitations limit external loading.

6.6 Switching Characteristics

Typical values correspond to T_J = 25°C. Minimum and maximum limits apply over –40°C to 125°C junction temperature range unless otherwise stated. V_{IN} = 48 V unless otherwise stated.

		MIN	TYP	MAX	UNIT
ON-TIME GENERATOR					
T_{ON} Test 1	V_{IN} = 32 V, R_{ON} = 100 kΩ	270	350	460	ns
T_{ON} Test 2	V_{IN} = 48 V, R_{ON} = 100 kΩ	188	250	336	ns
T_{ON} Test 4	V_{IN} = 10 V, R_{ON} = 250 kΩ	1880	3200	4425	ns
MINIMUM OFF-TIME					
Minimum Off-Timer	FB = 0 V		144		ns

Copyright © 2012–2015, Texas Instruments Incorporated

6.7 Typical Characteristics

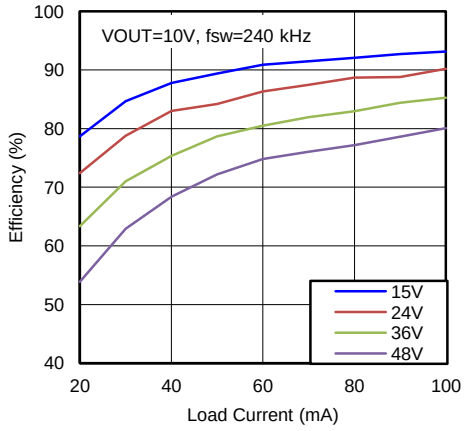

Figure 1. Efficiency at 240 kHz, 10 V

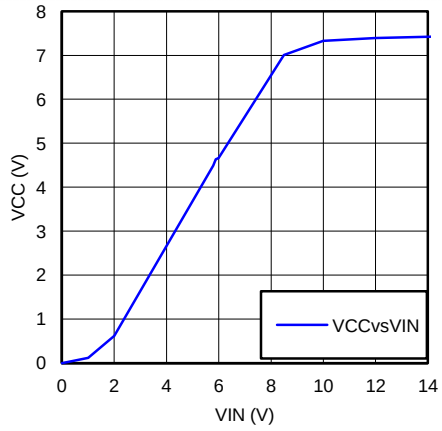

Figure 2. V_{CC} vs V_{IN}

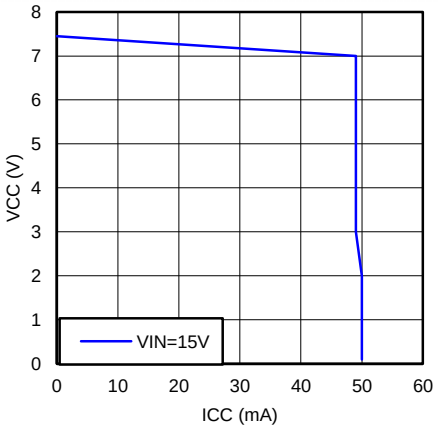

Figure 3. V_{CC} vs I_{CC}

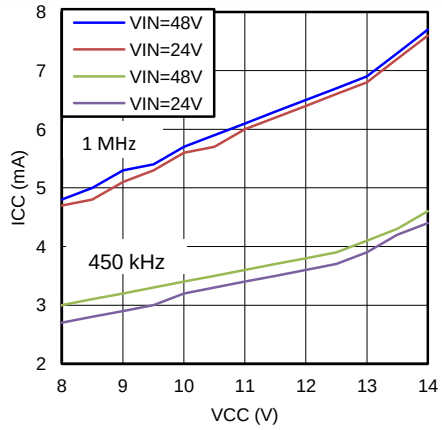

Figure 4. I_{CC} vs External V_{CC}

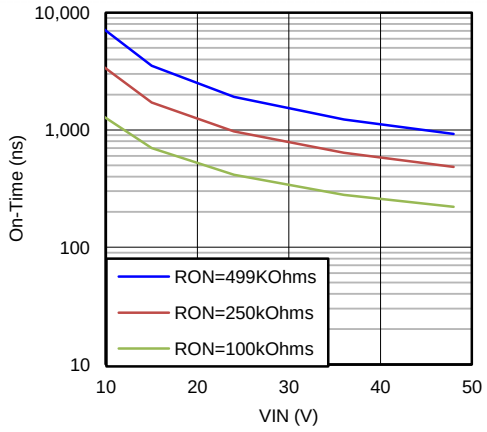

Figure 5. T_{ON} vs V_{IN} and R_{ON}

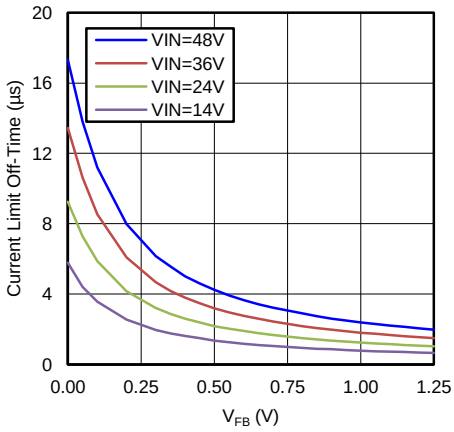

Figure 6. T_{OFF} (I_{LIM}) vs V_{FB} and V_{IN}

Copyright © 2012–2015, Texas Instruments Incorporated

Typical Characteristics (continued)

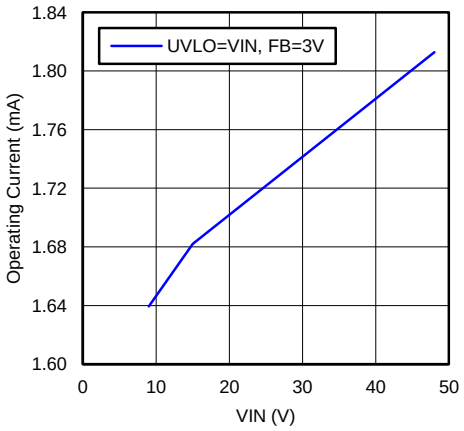

Figure 7. I_{IN} vs V_{IN} (Operating, Nonswitching)

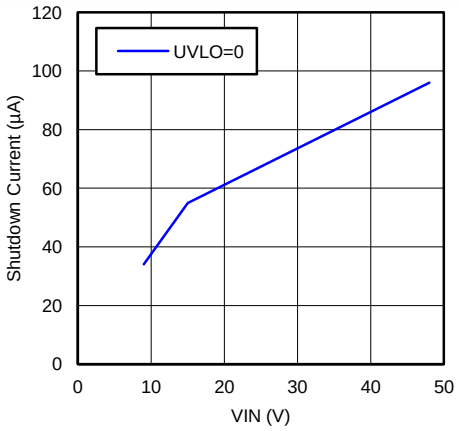

Figure 8. I_{IN} vs V_{IN} (Shutdown)

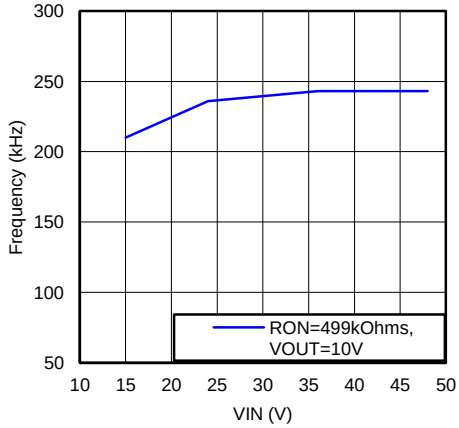

Figure 9. Switching Frequency vs V_{IN}

Copyright © 2012–2015, Texas Instruments Incorporated

7 Detailed Description

7.1 Overview

The LM25019 step-down switching regulator features all the functions needed to implement a low-cost, efficient, buck converter that can supply up to 100 mA to the load. This high-voltage regulator contains 48 V, N-channel buck and synchronous switches, is easy to implement, and is provided in thermally enhanced SO PowerPAD-8 and WSON-8 packages. The regulator operation is based on a constant on-time control scheme using an on-time inversely proportional to V_{IN}. This control scheme does not require loop compensation. The current limit is implemented with a forced off-time inversely proportional to V_{OUT}. This scheme ensures short circuit protection while providing minimum foldback. The simplified block diagram of the LM25019 device is shown in Figure 10.

The LM25019 device can be applied in numerous applications to efficiently regulate down higher voltages. This regulator is well suited for 12-V and 24-V rails. Protection features include: thermal shutdown, undervoltage lockout, minimum forced off-time, and an intelligent current limit.

7.2 Functional Block Diagram

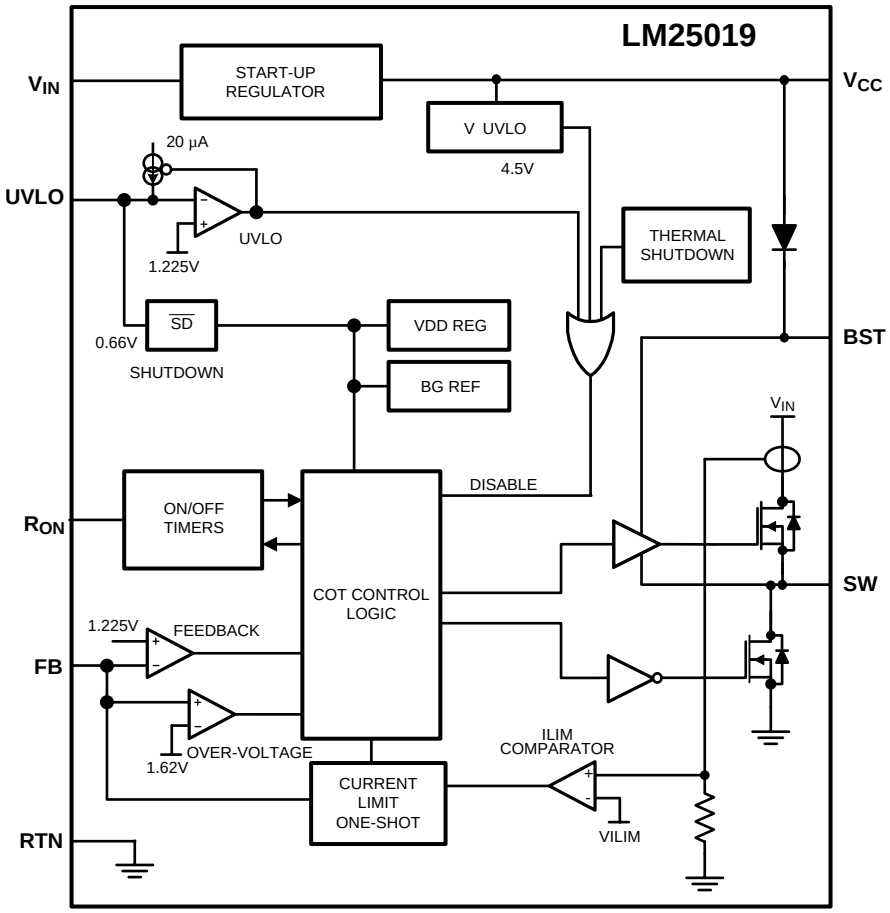

Figure 10. Functional Block Diagram

7.3 Feature Description

7.3.1 Control Overview

The LM25019 buck regulator employs a control principle based on a comparator and a one-shot on-timer, with the output voltage feedback (FB) compared to an internal reference (1.225 V). If the FB voltage is below the reference the internal buck switch is turned on for the one-shot timer period, which is a function of the input voltage and the programming resistor (R_{ON}). Following the on-time the switch remains off until the FB voltage falls below the reference, but never before the minimum off-time forced by the minimum off-time one-shot timer. When the FB pin voltage falls below the reference and the minimum off-time one-shot period expires, the buck switch is turned on for another on-time one-shot period. This will continue until regulation is achieved and the FB voltage is approximately equal to 1.225 V (typ).

In a synchronous buck converter, the low-side (sync) FET is on when the high-side (buck) FET is off. The inductor current ramps up when the high-side switch is on and ramps down when the high-side switch is off. There is no diode emulation feature in this IC, and therefore, the inductor current may ramp in the negative direction at light load. This causes the converter to operate in continuous conduction mode (CCM) regardless of the output loading. The operating frequency remains relatively constant with load and line variations. The operating frequency can be calculated as shown in Equation 1.

$$f_{SW} = \frac{V_{OUT}}{9 \times 10^{-11} \times R_{ON}} \quad (1)$$

The output voltage (V_{OUT}) is set by two external resistors (R_{FB1}, R_{FB2}). The regulated output voltage is calculated as shown in Equation 2.

$$V_{OUT} = 1.225V \times \frac{R_{FB2} + R_{FB1}}{R_{FB1}} \quad (2)$$

This regulator regulates the output voltage based on ripple voltage at the feedback input, requiring a minimum amount of ESR for the output capacitor (C_{OUT}). A minimum of 25 mV of ripple voltage at the feedback pin (FB) is required for the LM25019. In cases where the capacitor ESR is too small, additional series resistance may be required (R_C in Figure 11).

For applications where lower output voltage ripple is required the output can be taken directly from a low ESR output capacitor, as shown in Figure 11. However, R_C slightly degrades the load regulation.

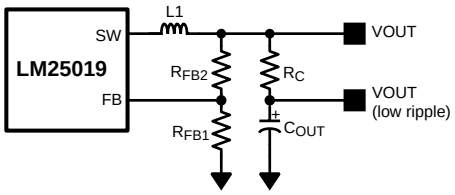

Figure 11. Low Ripple Output Configuration

7.3.2 V_{CC} Regulator

The LM25019 device contains an internal high-voltage linear regulator with a nominal output of 7.6 V. The input pin (V_{IN}) can be connected directly to the line voltages up to 48 V. The V_{CC} regulator is internally current limited to 30 mA. The regulator sources current into the external capacitor at V_{CC}. This regulator supplies current to internal circuit blocks including the synchronous MOSFET driver and the logic circuits. When the voltage on the V_{CC} pin reaches the UVLO threshold of 4.5 V, the IC is enabled.

The V_{CC} regulator contains an internal diode connection to the BST pin to replenish the charge in the gate drive boot capacitor when SW pin is low.

At high input voltages, the power dissipated in the high-voltage regulator is significant and can limit the overall achievable output power. As an example, with the input at 48 V and switching at high frequency, the V_{CC} regulator may supply up to 7 mA of current resulting in 48 V × 7 mA = 336 mW of power dissipation. If the V_{CC} voltage is driven externally by an alternate voltage source, between 8.55 V and 13 V, the internal regulator is disabled. This reduces the power dissipation in the IC.

Copyright © 2012–2015, Texas Instruments Incorporated

Feature Description (continued)

7.3.3 Regulation Comparator

The feedback voltage at FB is compared to an internal 1.225 V reference. In normal operation, when the output voltage is in regulation, an on-time period is initiated when the voltage at FB falls below 1.225 V. The high-side switch will stay on for the on-time, causing the FB voltage to rise above 1.225 V. After the on-time period, the high-side switch will stay off until the FB voltage again falls below 1.225 V. During start-up, the FB voltage will be below 1.225 V at the end of each on-time, causing the high-side switch to turn on immediately after the minimum forced off-time of 144 ns. The high-side switch can be turned off before the on-time is over if the peak current in the inductor reaches the current limit threshold.

7.3.4 Overvoltage Comparator

The feedback voltage at FB is compared to an internal 1.62 V reference. If the voltage at FB rises above 1.62 V the on-time pulse is immediately terminated. This condition can occur if the input voltage and/or the output load changes suddenly. The high-side switch will not turn on again until the voltage at FB falls below 1.225 V.

7.3.5 On-Time Generator

The on-time for the LM25019 device is determined by the R_{ON} resistor, and is inversely proportional to the input voltage (V_{IN}), resulting in a nearly constant frequency as V_{IN} is varied over its range. The on-time equation for the LM25019 device is shown in Equation 3.

$$T_{ON} = \frac{10^{-10} \times R_{ON}}{V_{IN}} \tag{3}$$

See Figure 5. R_{ON} should be selected for a minimum on-time (at maximum V_{IN}) greater than 100 ns, for proper operation. This requirement limits the maximum switching frequency for high V_{IN}.

7.3.6 Current Limit

The LM25019 device contains an intelligent current limit off-timer. If the current in the buck switch exceeds 240 mA, the present cycle is immediately terminated, and a nonresetable off-timer is initiated. The length of off-time is controlled by the FB voltage and the input voltage V_{IN}. As an example, when FB = 0 V and V_{IN} = 48 V, the maximum off-time is set to 16 µs. This condition occurs when the output is shorted, and during the initial part of start-up. This amount of time ensures safe short circuit operation up to the maximum input voltage of 48 V.

In cases of overload where the FB voltage is above zero volts (not a short circuit) the current limit off-time is reduced. Reducing the off-time during less severe overloads reduces the amount of foldback, recovery time, and start-up time. The off-time is calculated from Equation 4.

$$T_{OFF(ILIM)} = \frac{0.07 \times V_{IN}}{V_{FB} + 0.2V} \ \mu s \tag{4}$$

The current limit protection feature is peak limited. The maximum average output will be less than the peak.

7.3.7 N-Channel Buck Switch and Driver

The LM25019 device integrates an N-Channel Buck switch and associated floating high voltage gate driver. The gate driver circuit works in conjunction with an external bootstrap capacitor and an internal high voltage diode. A 0.01-uF ceramic capacitor connected between the BST pin and the SW pin provides the voltage to the driver during the on-time. During each off-time, the SW pin is at approximately 0 V, and the bootstrap capacitor charges from V_{CC} through the internal diode. The minimum off-timer, set to 144 ns, ensures a minimum time each cycle to recharge the bootstrap capacitor.

Copyright © 2012–2015, Texas Instruments Incorporated

Feature Description (continued)

7.3.8 Synchronous Rectifier

The LM25019 device provides an internal synchronous N-channel MOSFET rectifier. This MOSFET provides a path for the inductor current to flow when the high-side MOSFET is turned off.

The synchronous rectifier has no diode emulation mode, and is designed to keep the regulator in continuous conduction mode even during light loads which would otherwise result in discontinuous operation.

7.3.9 Undervoltage Detector

The LM25019 device contains a dual-level UVLO circuit. A summary of threshold voltages and operational states is provided in *Device Functional Modes*. When the UVLO pin voltage is below 0.66 V, the controller is in a low current shutdown mode. When the UVLO pin voltage is greater than 0.66 V but less than 1.225 V, the controller is in standby mode. In standby mode the V_{CC} bias regulator is active while the regulator output is disabled. When the V_{CC} pin exceeds the V_{CC} undervoltage threshold and the UVLO pin voltage is greater than 1.225 V, normal operation begins. An external set-point voltage divider from V_{IN} to GND can be used to set the minimum operating voltage of the regulator.

UVLO hysteresis is accomplished with an internal 20-µA current source that is switched on or off into the impedance of the set-point divider. When the UVLO threshold is exceeded, the current source is activated to quickly raise the voltage at the UVLO pin. The hysteresis is equal to the value of this current times the resistance R_{UV2}.

If the UVLO pin is wired directly to the V_{IN} pin, the regulator will begin operation once the V_{CC} undervoltage is satisfied.

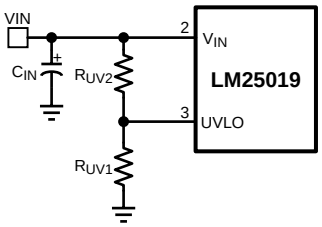

Figure 12. UVLO Resistor Setting

7.3.10 Thermal Protection

The LM25019 device should be operated so the junction temperature does not exceed 150°C during normal operation. An internal Thermal Shutdown circuit is provided to protect the LM25019 in the event of a higher than normal junction temperature. When activated, typically at 165°C, the controller is forced into a low power reset state, disabling the buck switch and the V_{CC} regulator. This feature prevents catastrophic failures from accidental device overheating. When the junction temperature reduces below 145°C (typical hysteresis = 20°C), the V_{CC} regulator is enabled, and normal operation is resumed.

Copyright © 2012–2015, Texas Instruments Incorporated

Feature Description (continued)

7.3.11 Ripple Configuration

LM25019 uses Constant-On-Time (COT) control scheme, in which the on-time is terminated by an on-timer, and the off-time is terminated by the feedback voltage (V_{FB}) falling below the reference voltage (V_{REF}). Therefore, for stable operation, the feedback voltage must decrease monotonically, in phase with the inductor current during the off-time. Furthermore, this change in feedback voltage (V_{FB}) during off-time must be large enough to suppress any noise component present at the feedback node.

Table 1 shows three different methods for generating appropriate voltage ripple at the feedback node. Type 1 and Type 2 ripple circuits couple the ripple at the output of the converter to the feedback node (FB). The output voltage ripple has two components:

1. Capacitive ripple caused by the inductor current ripple charging/discharging the output capacitor.
2. Resistive ripple caused by the inductor current ripple flowing through the ESR of the output capacitor.

The capacitive ripple is not in phase with the inductor current. As a result, the capacitive ripple does not decrease monotonically during the off-time. The resistive ripple is in phase with the inductor current and decreases monotonically during the off-time. The resistive ripple must exceed the capacitive ripple at the output node (V_{OUT}) for stable operation. If this condition is not satisfied unstable switching behavior is observed in COT converters, with multiple on-time bursts in close succession followed by a long off-time.

Type 3 ripple method uses R_r and C_r and the switch node (SW) voltage to generate a triangular ramp. This triangular ramp is ac coupled using C_{ac} to the feedback node (FB). Because this circuit does not use the output voltage ripple, it is ideally suited for applications where low output voltage ripple is required. See *AN-1481 Controlling Output Ripple and Achieving ESR Independence in Constant On-Time (COT) Regulator Designs* (SNVA166) for more details for each ripple generation method.

Table 1. Ripple Configurations

TYPE 1 LOWEST COST CONFIGURATION	TYPE 2 REDUCED RIPPLE CONFIGURATION	TYPE 3 MINIMUM RIPPLE CONFIGURATION
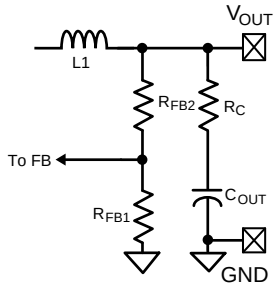	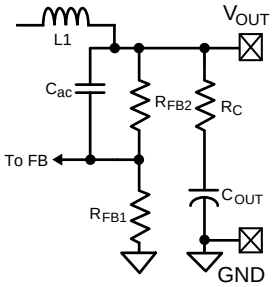	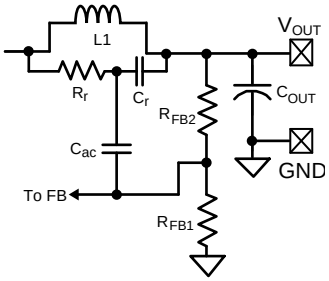
$R_C \geq \frac{25\ mV}{\Delta I_{L(MIN)}} \times \frac{V_{OUT}}{V_{REF}}$ (5)	$C \geq \frac{5}{f_{sw}(R_{FB2} \| R_{FB1})}$ $R_C \geq \frac{25\ mV}{\Delta I_{L(MIN)}}$ (6)	$C_r = 3300\ pF$ $C_{ac} = 100\ nF$ $R_r C_r \leq \frac{(V_{IN(MIN)} - V_{OUT}) \times T_{ON}}{25\ mV}$ (7)

7.3.12 Soft Start

A soft-start feature can be implemented with the LM25019 device using an external circuit. As shown in Figure 13, the soft-start circuit consists of one capacitor C_1, two resistors, R_1 and R_2, and a diode, D. During the initial start-up, the VCC voltage is established before the V_{OUT} voltage. Capacitor C_1 is discharged and D is thereby forward biased. The FB voltage is pulled up above the reference voltage (1.225 V) and switching is thereby disabled. As capacitor C_1 charges, the voltage at node B gradually decreases and switching commences. V_{OUT} gradually rises to maintain the FB voltage at the reference voltage. Once the voltage at node B is less than a diode drop above the FB voltage, the soft-start sequence is finished and D is reverse-biased.

During the initial part of the start-up, the FB voltage can be approximated as shown in Equation 8.

$$V_{FB} = (VCC - V_D) \times \frac{R_{FB1} \times R_{FB2}}{R_2 \times (R_{FB1} + R_{FB2}) + R_{FB1} \times R_{FB2}} \quad (8)$$

C1 is charged after the first start up. Diode D1 is optional and can be added to discharge C1 and initialize the soft-start sequence when the input voltage experiences a momentary drop.

To achieve the desired soft-start, the following design guidance is recommended:

(1) R_2 is selected so that V_{FB} is higher than 1.225 V for a V_{CC} of 4.5 V, but is lower than 5 V when V_{CC} is 8.55 V. If an external V_{CC} is used, V_{FB} should not exceed 5 V at maximum V_{CC}.

(2) C_1 is selected to achieve the desired start-up time that can be determined from Equation 9.

$$t_S = C_1 \times \left(R_2 + \frac{R_{FB1} \times R_{FB2}}{R_{FB1} + R_{FB2}}\right) \quad (9)$$

(3) R_1 is used to maintain the node B voltage at zero after the soft-start is finished. A value larger than the feedback resistor divider is preferred. The effect of resistor R1 is ignored in Equation 9.

With component values from the applications schematic shown in Figure 14, selecting C_1 = 1 uF, R_2 = 1 kΩ, R_1 = 30 kΩ results in a soft-start time of about 2 ms.

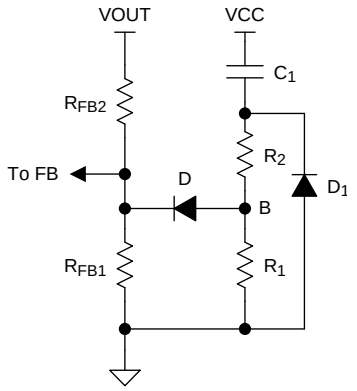

Figure 13. Soft-Start Circuit

Copyright © 2012–2015, Texas Instruments Incorporated

7.4 Device Functional Modes

The UVLO pin controls the operating mode of the LM25018 device (see Table 2 for the detailed functional states).

Table 2. UVLO Mode

UVLO	V_{CC}	MODE	DESCRIPTION
< 0.66 V	Disabled	Shutdown	V_{CC} regulator disabled. Switching disabled.
0.66 V – 1.225 V	Enabled	Standby	V_{CC} regulator enabled Switching disabled.
> 1.225 V	V_{CC} < 4.5 V	Standby	V_{CC} regulator enabled. Switching disabled.
	V_{CC} > 4.5 V	Operating	V_{CC} enabled. Switching enabled.

Copyright © 2012–2015, Texas Instruments Incorporated

8 Application and Implementation

NOTE

Information in the following applications sections is not part of the TI component specification, and TI does not warrant its accuracy or completeness. TI's customers are responsible for determining suitability of components for their purposes. Customers should validate and test their design implementation to confirm system functionality.

8.1 Application Information

The LM25019 device is step-down DC-DC converter. The device is typically used to convert a higher DC voltage to a lower DC voltage with a maximum available output current of 650 mA. Use the following design procedure to select component values for the LM25019 device. Alternately, use the WEBENCH® software to generate a complete design. The WEBENCH software uses an iterative design procedure and accesses a comprehensive database of components when generating a design. This section presents a simplified discussion of the design process.

8.2 Typical Application

The application schematic of a buck supply is shown in Figure 14. For output voltage (V_{OUT}) more than one diode drop higher than the maximum regulation voltage of V_{CC} (8.55 V, see *Electrical Characteristics*), the V_{CC} pin can be connected to V_{OUT} through a diode (D2), as shown in Figure 14, to improve efficiency and reduce power dissipation in the IC.

The design example shown in Figure 14 uses equations from the *Feature Description* section with component names provided in the *Typical Application* schematic. Corresponding component designators from Figure 14 are also provided for each selected value.

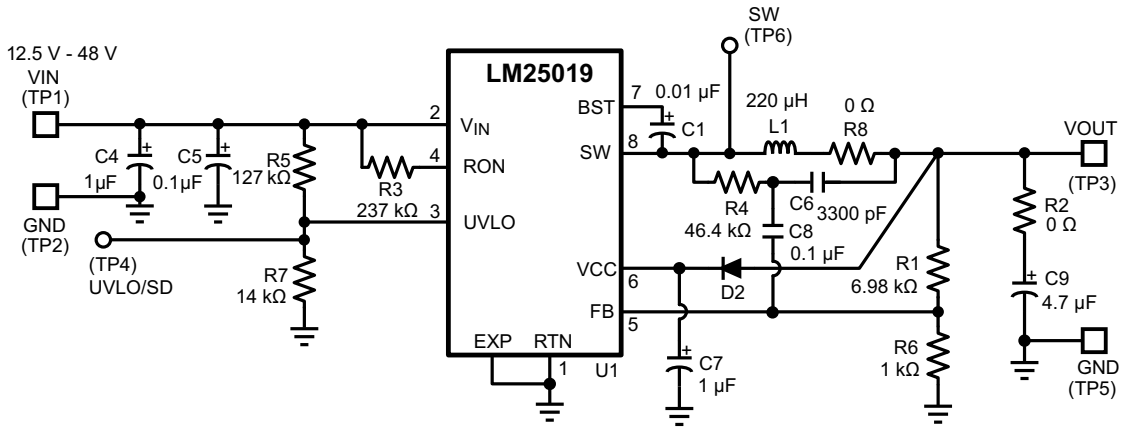

Figure 14. Final Schematic for 12.5-V to 48-V Input, and 10-V, 100-mA Output Buck Converter

8.2.1 Design Requirements

DESIGN PARAMETERS	VALUE
Input Range	12.5 V to 48 V
Output Voltage	10 V
Maximum Output Current	100 mA
Nominal Switching Frequency	≈ 440 kHz

Copyright © 2012–2015, Texas Instruments Incorporated

8.2.2 Detailed Design Procedure

8.2.2.1 RFB1, RFB2

$V_{OUT} = V_{FB} \times (R_{FB2} / R_{FB1} + 1)$, and because V_{FB} = 1.225 V, the ratio of R_{FB2} to R_{FB1} calculates as 7:1. Standard values are chosen with R_{FB2} = R1 = 6.98 kΩ and R_{FB1} = R6 = 1.00 kΩ. Other values could be used as long as the 7:1 ratio is maintained.

8.2.2.2 Frequency Selection

At the minimum input voltage, the maximum switching frequency of LM25019 is restricted by the forced minimum off-time ($T_{OFF(MIN)}$) as shown in Equation 10.

$$f_{SW(MAX)} = \frac{1 - D_{MAX}}{T_{OFF(MIN)}} = \frac{1 - 10/12.5}{200\ ns} = 1\ MHz \quad (10)$$

Similarly, at maximum input voltage, the maximum switching frequency of LM25019 is restricted by the minimum T_{ON} as shown in Equation 11.

$$f_{SW(MAX)} = \frac{D_{MIN}}{T_{ON(MIN)}} = \frac{10/48}{100\ ns} = 2.1\ MHz \quad (11)$$

Resistor R_{ON} sets the nominal switching frequency based on Equation 12.

$$f_{SW} = \frac{V_{OUT}}{K \times R_{ON}} \quad (12)$$

Where:

$K = 9 \times 10^{-11}$

Operation at high switching frequency results in lower efficiency while providing the smallest solution. Using 440 kHz as the target swtiching frequency, the calculated valued of R_{ON} is 253 kΩ. The standard value for R_{ON} = R3 = 237 kΩ is selected.

8.2.2.3 Inductor Selection

The inductance selection is a compromise between solution size, output ripple, and efficiency. The peak inductor current at maximum load current should be smaller than the minimum current limit of 150 mA. The maximum permissible peak to peak inductor ripple is determined by Equation 13.

$$\Delta IL = 2 \times (I_{LIM(min)} - I_{OUT(max)}) = 2 \times 50 = 100\ mA \quad (13)$$

The minimum inductance is determined by Equation 14.

$$\Delta I_L = \frac{V_{IN} - V_{OUT}}{L1 \times f_{SW}} \times \frac{V_{OUT}}{V_{IN}} \quad (14)$$

Using maximum V_{IN} of 48V, the calculation from Equation 14 results in L = 179 µH. A standard value of 220 µH is selected. For proper operation, the inductor saturation current should be higher than the peak current encountered in the application. For robust short circuit protection, the inductor saturation current should be higher than the maximum current limit of 300 mA.

8.2.2.4 Output Capacitor

The output capacitor is selected to minimize the capacitive ripple across it. The maximum ripple is observed at maximum input voltage and is shown in Equation 15.

$$C_{OUT} = \frac{\Delta I_L}{8 \times f_{sw} \times \Delta V_{ripple}} \quad (15)$$

Where:

ΔV_{ripple} is the voltage ripple across the capacitor and ΔI_L is calculated using Equation 14.

Substituting ΔV_{ripple} = 5 mV gives C_{OUT} = 4.65 µF. A 4.7-µF standard value is selected for C_{OUT} =C9. An X5R or X7R type capacitor with a voltage rating 16 V or higher should be selected.

Copyright © 2012–2015, Texas Instruments Incorporated

8.2.2.5 Type III Ripple Circuit

Type III ripple circuit as described in *Ripple Configuration* is chosen for this example. For a constant on-time converter to be stable, the injected in-phase ripple should be larger than the capacitive ripple on C_{OUT}.

Using type III ripple circuit equations, the target ripple should be greater than the capacitive ripple generated at the primary output.

C_r = C6 = 3300 pF

C_{ac} = C8 = 100 nF

$$R_r \leq \frac{(V_{IN(MIN)} - V_{OUT}) \times T_{ON(VINMIN)}}{(25mV \times C_r)} \quad (16)$$

For T_{ON}, refer to Equation 3.

Ripple resistor R_r is calculated to be 57.6 kΩ. This value provides the minimum ripple for stable operation. A smaller resistance should be selected to allow for variations in T_{ON}, C_{OUT}, and other components. R_r = R4 = 46.4 kΩ is selected for this example application.

8.2.2.6 V_{CC} and Bootstrap Capacitor

The V_{CC} capacitor provides charge to bootstrap capacitor as well as internal circuitry and low-side gate driver. The bootstrap capacitor provides charge to high-side gate driver. The recommended value for C_{VCC} = C7 is 1-µF. A good value for C_{BST} = C1 is 0.01 µF.

8.2.2.7 Input Capacitor

The input capacitor should be large enough to limit the input voltage ripple and can be calculated using Equation 17.

$$C_{IN} \geq \frac{I_{OUT(MAX)}}{4 \times f_{SW} \times \Delta V_{IN}} \quad (17)$$

Choosing a ΔV_{IN} = 0.5 V gives a minimum C_{IN} = 0.12 µF. A standard value of 1 µF is selected for C_{IN} = C4. The input capacitor should be rated for the maximum input voltage under all conditions. A 50-V, X7R dielectric should be selected for this design.

The input capacitor should be placed directly across V_{IN} and RTN (pin 2 and 1) of the IC. If it is not possible to place all of the input capacitor close to the IC, a 0.1-µF capacitor should be placed near the IC to provide a bypass path for the high-frequency component of the switching current. This helps limit the switching noise.

8.2.2.8 UVLO Resistors

The UVLO resistors R_{UV1} and R_{UV2} set the UVLO threshold and hysteresis according to Equation 18 and Equation 19.

$$V_{IN}(HYS) = I_{HYS} \times R_{UV2} \quad (18)$$

$$V_{IN}(UVLO,rising) = 1.225V \times \left(\frac{R_{UV2}}{R_{UV1}} + 1\right) \quad (19)$$

Where:

I_{HYS} = 20 µA

Selecting UVLO hysteresis of 2.5 V and UVLO rising threshold of 12 V results in R_{UV1} = 14.53 kΩ and R_{UV2} = 125 kΩ. Selecting a standard value of R_{UV1} = R7 = 14 kΩ and R_{UV2} = R5 = 127 kΩ results in UVLO thresholds and hysteresis of 12.5 V to 2.5 V, respectively.

Copyright © 2012–2015, Texas Instruments Incorporated

8.2.3 Application Curves

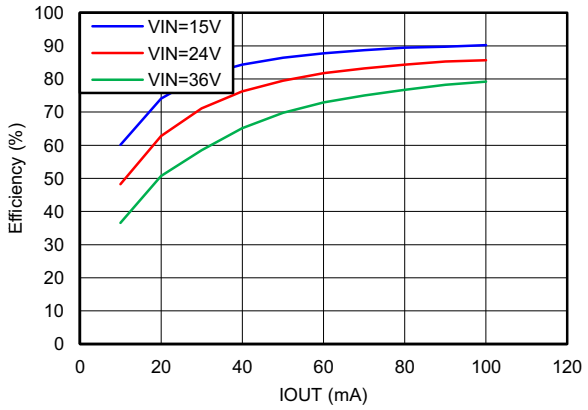

Figure 15. Efficiency vs Load Current

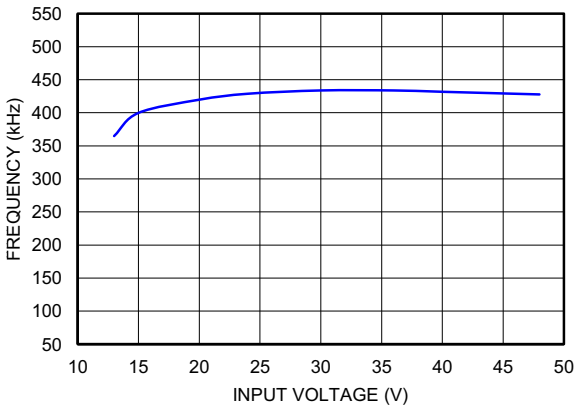

Figure 16. Frequency vs Input Voltage (I_{OUT} = 100 mA)

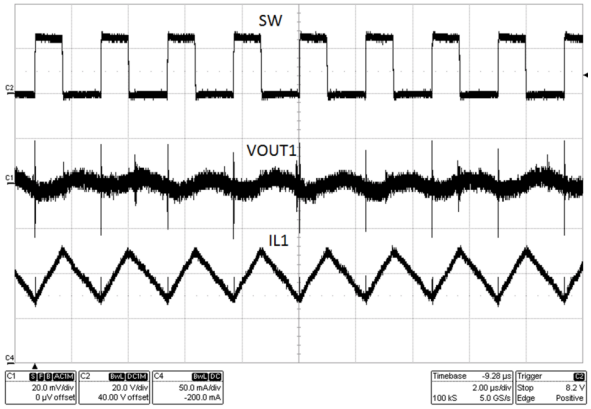

Figure 17. Typical Switching Waveform (V_{IN} = 24 V, I_{OUT} = 100 mA)

9 Power Supply Recommendations

LM25019 is a power-management device. The power supply for the device is any DC voltage source within the specified input range.

10 Layout

10.1 Layout Guidelines

A proper layout is essential for optimum performance of the circuit. In particular, the following guidelines should be observed:

1. C_{IN}: The loop consisting of input capacitor (C_{IN}), V_{IN} pin, and RTN pin carries switching currents. Therefore, the input capacitor should be placed close to the IC, directly across V_{IN} and RTN pins and the connections to these two pins should be direct to minimize the loop area. In general it is not possible to accommodate all of input capacitance near the IC. A good practice is to use a 0.1-µF or 0.47-µF capacitor directly across the V_{IN} and RTN pins close to the IC, and the remaining bulk capacitor as close as possible (see Figure 18).
2. C_{VCC} and C_{BST}: The V_{CC} and bootstrap (BST) bypass capacitors supply switching currents to the high and low-side gate drivers. These two capacitors should also be placed as close to the IC as possible, and the connecting trace length and loop area should be minimized (see Figure 18).
3. The feedback trace carries the output voltage information and a small ripple component that is necessary for proper operation of LM25019. Therefore, take care while routing the feedback trace to avoid coupling any noise to this pin. In particular, feedback trace should not run close to magnetic components, or parallel to any other switching trace.
4. SW trace: The SW node switches rapidly between V_{IN} and GND every cycle and is therefore a possible source of noise. The SW node area should be minimized. In particular, the SW node should not be inadvertently connected to a copper plane or pour.

10.2 Layout Example

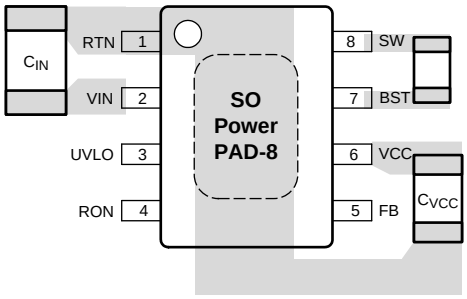

Figure 18. Placement of Bypass Capacitors

Copyright © 2012–2015, Texas Instruments Incorporated

11 Device and Documentation Support

11.1 Documentation Support

11.1.1 Related Documentation

- AN-1481 *Controlling Output Ripple and Achieving ESR Independence in Constant On-Time (COT) Regulator Designs* (SNVA166)
- AN-2292 *Designing an Isolated Buck (Flybuck) Converter* (SNVA674)
- *LM25019 Isolated Evaluation Board* (SNOU100)

11.2 Community Resources

The following links connect to TI community resources. Linked contents are provided "AS IS" by the respective contributors. They do not constitute TI specifications and do not necessarily reflect TI's views; see TI's Terms of Use.

TI E2E™ Online Community ***TI's Engineer-to-Engineer (E2E) Community.*** Created to foster collaboration among engineers. At e2e.ti.com, you can ask questions, share knowledge, explore ideas and help solve problems with fellow engineers.

Design Support ***TI's Design Support*** Quickly find helpful E2E forums along with design support tools and contact information for technical support.

11.3 Trademarks

PowerPAD, E2E are trademarks of Texas Instruments.
WEBENCH is a registered trademark of Texas Instruments.
All other trademarks are the property of their respective owners.

11.4 Electrostatic Discharge Caution



These devices have limited built-in ESD protection. The leads should be shorted together or the device placed in conductive foam during storage or handling to prevent electrostatic damage to the MOS gates.

11.5 Glossary

SLYZ022 — *TI Glossary*.

This glossary lists and explains terms, acronyms, and definitions.

12 Mechanical, Packaging, and Orderable Information

The following pages include mechanical, packaging, and orderable information. This information is the most current data available for the designated devices. This data is subject to change without notice and revision of this document. For browser-based versions of this data sheet, refer to the left-hand navigation.

Copyright © 2012–2015, Texas Instruments Incorporated

PACKAGING INFORMATION

Orderable Device	Status (1)	Package Type	Package Drawing	Pins	Package Qty	Eco Plan (2)	Lead/Ball Finish (6)	MSL Peak Temp (3)	Op Temp (°C)	Device Marking (4/5)	Samples
LM25019MR/NOPB	ACTIVE	SO PowerPAD	DDA	8	95	Green (RoHS & no Sb/Br)	SN	Level-3-260C-168 HR	-40 to 125	L25019 MR	Samples
LM25019MRE/NOPB	ACTIVE	SO PowerPAD	DDA	8	250	Green (RoHS & no Sb/Br)	SN	Level-3-260C-168 HR	-40 to 125	L25019 MR	Samples
LM25019MRX/NOPB	ACTIVE	SO PowerPAD	DDA	8	2500	Green (RoHS & no Sb/Br)	SN	Level-3-260C-168 HR	-40 to 125	L25019 MR	Samples
LM25019SD/NOPB	ACTIVE	WSON	NGU	8	1000	Green (RoHS & no Sb/Br)	SN	Level-1-260C-UNLIM	-40 to 125	L25019	Samples
LM25019SDE/NOPB	ACTIVE	WSON	NGU	8	250	Green (RoHS & no Sb/Br)	SN	Level-1-260C-UNLIM	-40 to 125	L25019	Samples
LM25019SDX/NOPB	ACTIVE	WSON	NGU	8	4500	Green (RoHS & no Sb/Br)	SN	Level-1-260C-UNLIM	-40 to 125	L25019	Samples

(1) The marketing status values are defined as follows:
ACTIVE: Product device recommended for new designs.
LIFEBUY: TI has announced that the device will be discontinued, and a lifetime-buy period is in effect.
NRND: Not recommended for new designs. Device is in production to support existing customers, but TI does not recommend using this part in a new design.
PREVIEW: Device has been announced but is not in production. Samples may or may not be available.
OBSOLETE: TI has discontinued the production of the device.

(2) **RoHS:** TI defines "RoHS" to mean semiconductor products that are compliant with the current EU RoHS requirements for all 10 RoHS substances, including the requirement that RoHS substance do not exceed 0.1% by weight in homogeneous materials. Where designed to be soldered at high temperatures, "RoHS" products are suitable for use in specified lead-free processes. TI may reference these types of products as "Pb-Free".
RoHS Exempt: TI defines "RoHS Exempt" to mean products that contain lead but are compliant with EU RoHS pursuant to a specific EU RoHS exemption.
Green: TI defines "Green" to mean the content of Chlorine (Cl) and Bromine (Br) based flame retardants meet JS709B low halogen requirements of <=1000ppm threshold. Antimony trioxide based flame retardants must also meet the <=1000ppm threshold requirement.

(3) MSL, Peak Temp. - The Moisture Sensitivity Level rating according to the JEDEC industry standard classifications, and peak solder temperature.

(4) There may be additional marking, which relates to the logo, the lot trace code information, or the environmental category on the device.

(5) Multiple Device Markings will be inside parentheses. Only one Device Marking contained in parentheses and separated by a "~" will appear on a device. If a line is indented then it is a continuation of the previous line and the two combined represent the entire Device Marking for that device.

(6) Lead/Ball Finish - Orderable Devices may have multiple material finish options. Finish options are separated by a vertical ruled line. Lead/Ball Finish values may wrap to two lines if the finish value exceeds the maximum column width.

Important Information and Disclaimer: The information provided on this page represents TI's knowledge and belief as of the date that it is provided. TI bases its knowledge and belief on information provided by third parties, and makes no representation or warranty as to the accuracy of such information. Efforts are underway to better integrate information from third parties. TI has taken and continues to take reasonable steps to provide representative and accurate information but may not have conducted destructive testing or chemical analysis on incoming materials and chemicals. TI and TI suppliers consider certain information to be proprietary, and thus CAS numbers and other limited information may not be available for release.

In no event shall TI's liability arising out of such information exceed the total purchase price of the TI part(s) at issue in this document sold by TI to Customer on an annual basis.

TAPE AND REEL INFORMATION

REEL DIMENSIONS

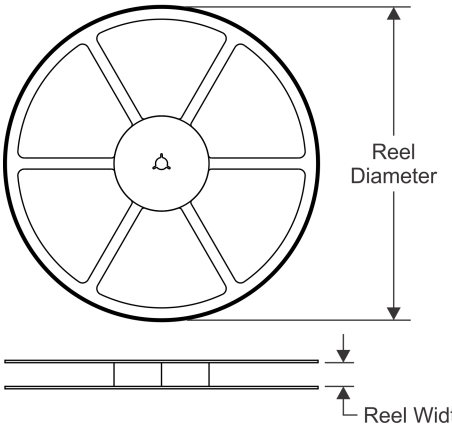

TAPE DIMENSIONS

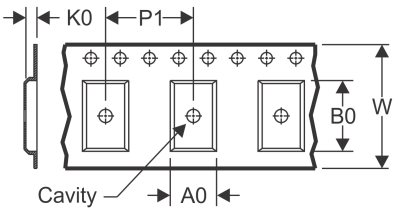

A0	Dimension designed to accommodate the component width
B0	Dimension designed to accommodate the component length
K0	Dimension designed to accommodate the component thickness
W	Overall width of the carrier tape
P1	Pitch between successive cavity centers

QUADRANT ASSIGNMENTS FOR PIN 1 ORIENTATION IN TAPE

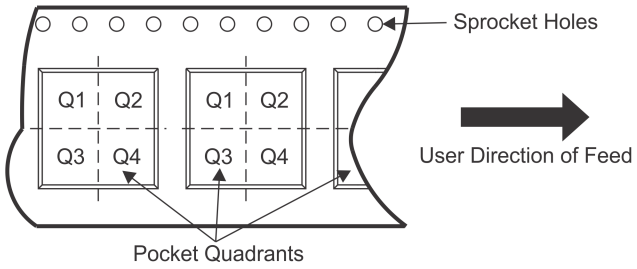

*All dimensions are nominal

Device	Package Type	Package Drawing	Pins	SPQ	Reel Diameter (mm)	Reel Width W1 (mm)	A0 (mm)	B0 (mm)	K0 (mm)	P1 (mm)	W (mm)	Pin1 Quadrant
LM25019MRE/NOPB	SO Power PAD	DDA	8	250	178.0	12.4	6.5	5.4	2.0	8.0	12.0	Q1
LM25019MRX/NOPB	SO Power PAD	DDA	8	2500	330.0	12.4	6.5	5.4	2.0	8.0	12.0	Q1
LM25019SD/NOPB	WSON	NGU	8	1000	178.0	12.4	4.3	4.3	1.3	8.0	12.0	Q1
LM25019SDE/NOPB	WSON	NGU	8	250	178.0	12.4	4.3	4.3	1.3	8.0	12.0	Q1
LM25019SDX/NOPB	WSON	NGU	8	4500	330.0	12.4	4.3	4.3	1.3	8.0	12.0	Q1

TAPE AND REEL BOX DIMENSIONS

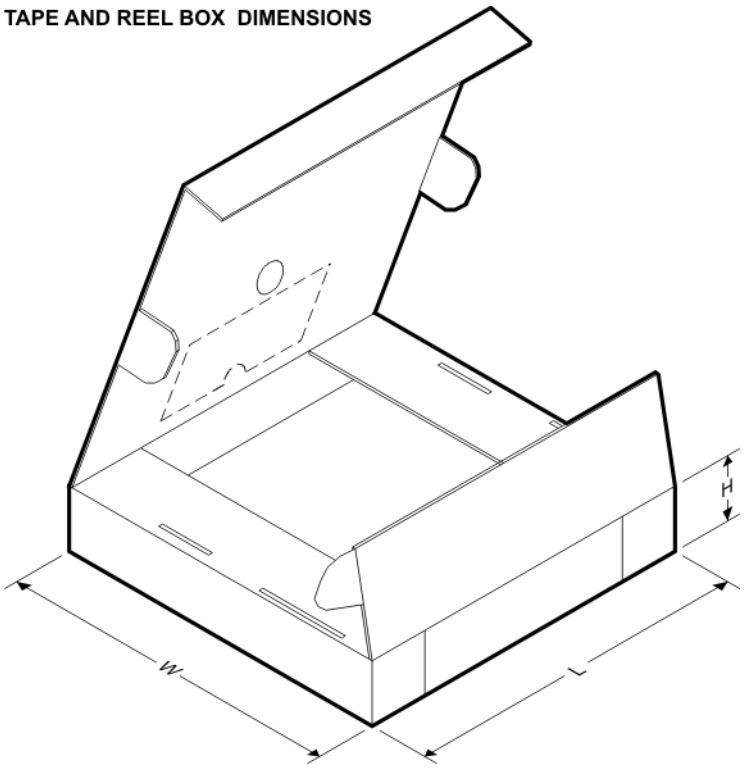

*All dimensions are nominal

Device	Package Type	Package Drawing	Pins	SPQ	Length (mm)	Width (mm)	Height (mm)
LM25019MRE/NOPB	SO PowerPAD	DDA	8	250	210.0	185.0	35.0
LM25019MRX/NOPB	SO PowerPAD	DDA	8	2500	367.0	367.0	35.0
LM25019SD/NOPB	WSON	NGU	8	1000	210.0	185.0	35.0
LM25019SDE/NOPB	WSON	NGU	8	250	210.0	185.0	35.0
LM25019SDX/NOPB	WSON	NGU	8	4500	367.0	367.0	35.0

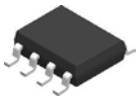

PACKAGE OUTLINE

DDA0008B

PowerPAD™ SOIC - 1.7 mm max height

PLASTIC SMALL OUTLINE

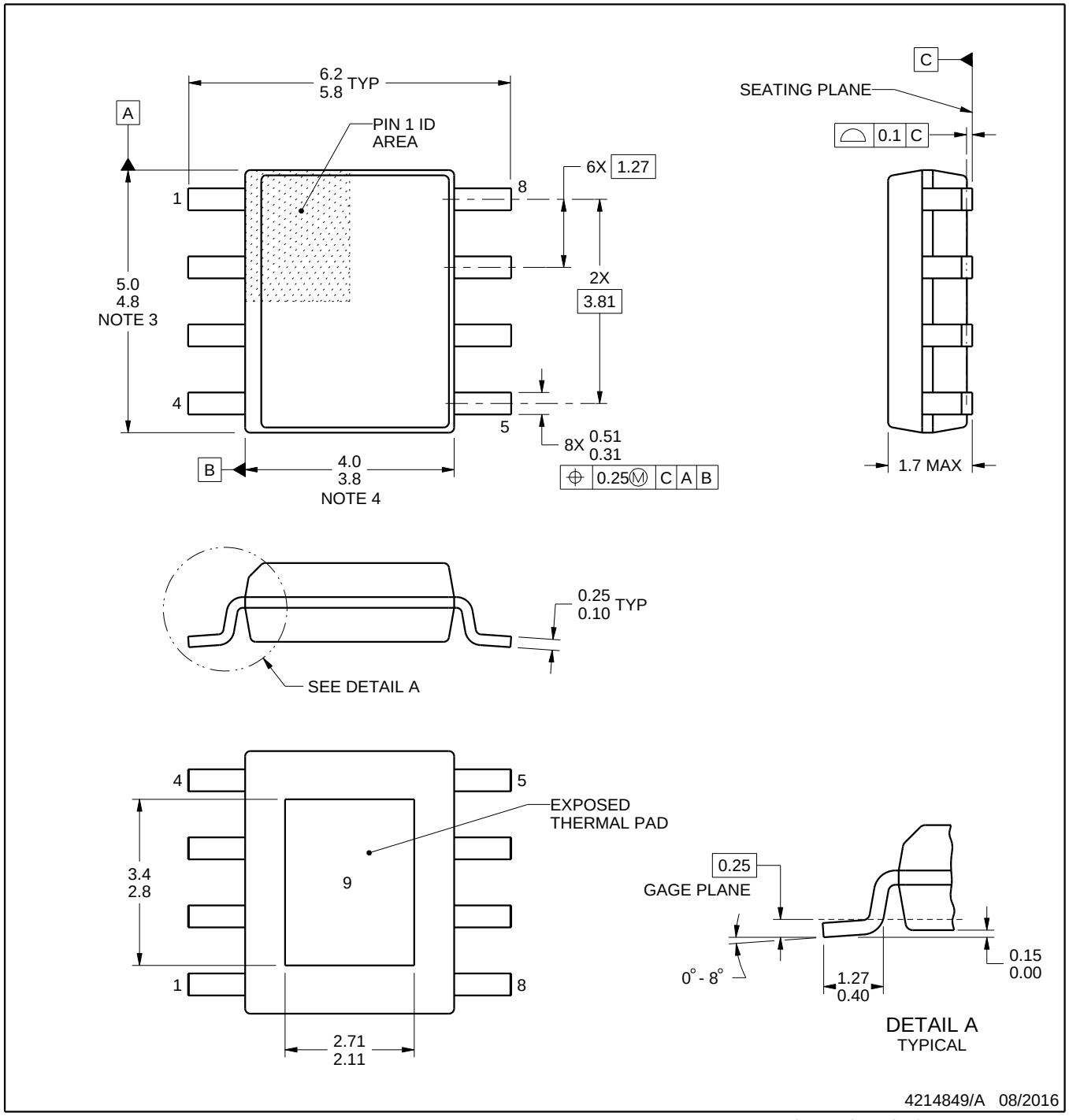

PowerPAD is a trademark of Texas Instruments.

NOTES:

1. All linear dimensions are in millimeters. Any dimensions in parenthesis are for reference only. Dimensioning and tolerancing per ASME Y14.5M.
2. This drawing is subject to change without notice.
3. This dimension does not include mold flash, protrusions, or gate burrs. Mold flash, protrusions, or gate burrs shall not exceed 0.15 mm per side.
4. This dimension does not include interlead flash. Interlead flash shall not exceed 0.25 mm per side.
5. Reference JEDEC registration MS-012.

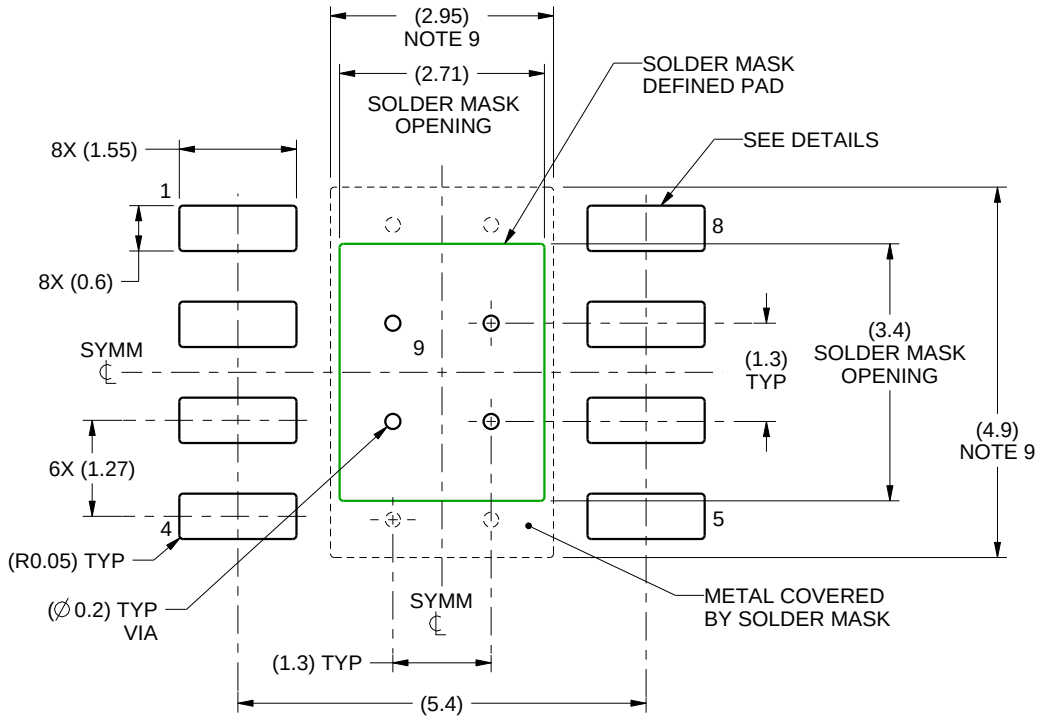

LAND PATTERN EXAMPLE
SCALE:10X

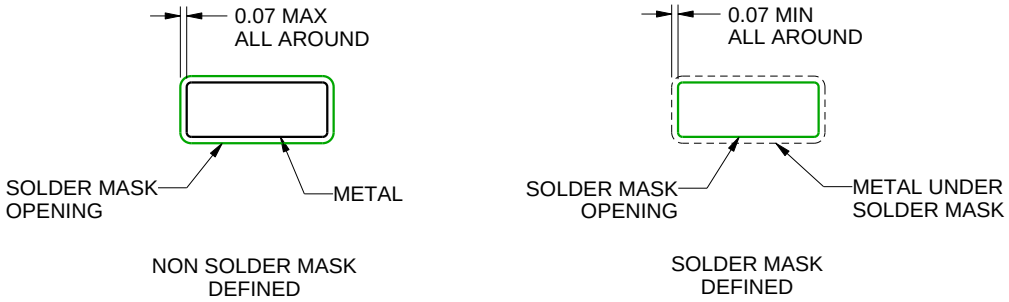

SOLDER MASK DETAILS
PADS 1-8

4214849/A 08/2016

NOTES: (continued)

6. Publication IPC-7351 may have alternate designs.
7. Solder mask tolerances between and around signal pads can vary based on board fabrication site.
8. This package is designed to be soldered to a thermal pad on the board. For more information, see Texas Instruments literature numbers SLMA002 (www.ti.com/lit/slma002) and SLMA004 (www.ti.com/lit/slma004).
9. Size of metal pad may vary due to creepage requirement.
10. Vias are optional depending on application, refer to device data sheet. If any vias are implemented, refer to their locations shown on this view. It is recommended that vias under paste be filled, plugged or tented.

EXAMPLE STENCIL DESIGN

DDA0008B

PowerPAD™ SOIC - 1.7 mm max height

PLASTIC SMALL OUTLINE

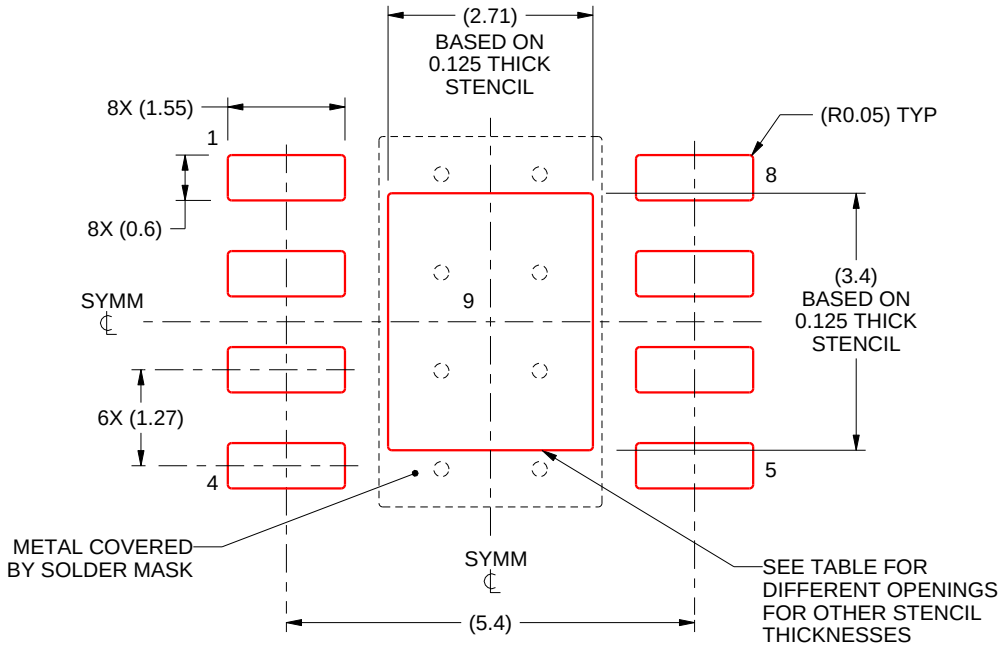

SOLDER PASTE EXAMPLE
EXPOSED PAD
100% PRINTED SOLDER COVERAGE BY AREA
SCALE:10X

STENCIL THICKNESS	SOLDER STENCIL OPENING
0.1	3.03 X 3.80
0.125	2.71 X 3.40 (SHOWN)
0.150	2.47 X 3.10
0.175	2.29 X 2.87

4214849/A 08/2016

NOTES: (continued)

11. Laser cutting apertures with trapezoidal walls and rounded corners may offer better paste release. IPC-7525 may have alternate design recommendations.
12. Board assembly site may have different recommendations for stencil design.

NGU0008B

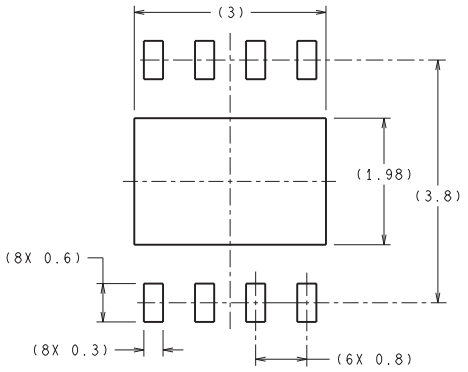

RECOMMENDED LAND PATTERN

DIMENSIONS ARE IN MILLIMETERS
DIMENSIONS IN ( ) FOR REFERENCE ONLY

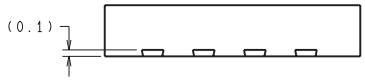

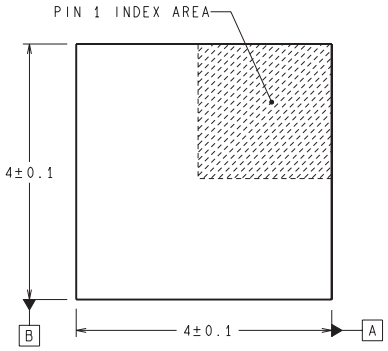

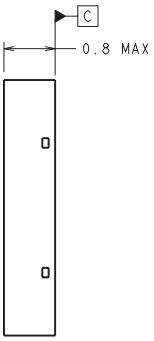

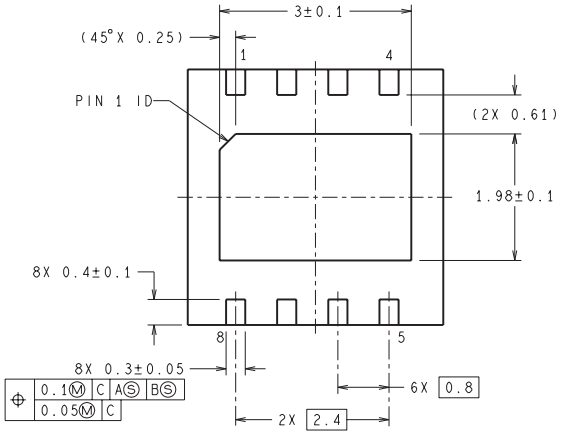

SDC08B (Rev A)

IMPORTANT NOTICE AND DISCLAIMER

TI PROVIDES TECHNICAL AND RELIABILITY DATA (INCLUDING DATASHEETS), DESIGN RESOURCES (INCLUDING REFERENCE DESIGNS), APPLICATION OR OTHER DESIGN ADVICE, WEB TOOLS, SAFETY INFORMATION, AND OTHER RESOURCES “AS IS” AND WITH ALL FAULTS, AND DISCLAIMS ALL WARRANTIES, EXPRESS AND IMPLIED, INCLUDING WITHOUT LIMITATION ANY IMPLIED WARRANTIES OF MERCHANTABILITY, FITNESS FOR A PARTICULAR PURPOSE OR NON-INFRINGEMENT OF THIRD PARTY INTELLECTUAL PROPERTY RIGHTS.

These resources are intended for skilled developers designing with TI products. You are solely responsible for (1) selecting the appropriate TI products for your application, (2) designing, validating and testing your application, and (3) ensuring your application meets applicable standards, and any other safety, security, or other requirements. These resources are subject to change without notice. TI grants you permission to use these resources only for development of an application that uses the TI products described in the resource. Other reproduction and display of these resources is prohibited. No license is granted to any other TI intellectual property right or to any third party intellectual property right. TI disclaims responsibility for, and you will fully indemnify TI and its representatives against, any claims, damages, costs, losses, and liabilities arising out of your use of these resources.

TI’s products are provided subject to TI’s Terms of Sale (www.ti.com/legal/termsofsale.html) or other applicable terms available either on ti.com or provided in conjunction with such TI products. TI’s provision of these resources does not expand or otherwise alter TI’s applicable warranties or warranty disclaimers for TI products.

Mailing Address: Texas Instruments, Post Office Box 655303, Dallas, Texas 75265
Copyright © 2020, Texas Instruments Incorporated