National Semiconductor

February 2005

LM185/LM285/LM385
Adjustable Micropower Voltage References

General Description

The LM185/LM285/LM385 are micropower 3-terminal adjustable band-gap voltage reference diodes. Operating from 1.24 to 5.3V and over a 10µA to 20mA current range, they feature exceptionally low dynamic impedance and good temperature stability. On-chip trimming is used to provide tight voltage tolerance. Since the LM185 band-gap reference uses only transistors and resistors, low noise and good long-term stability result.

Careful design of the LM185 has made the device tolerant of capacitive loading, making it easy to use in almost any reference application. The wide dynamic operating range allows its use with widely varying supplies with excellent regulation.

The extremely low power drain of the LM185 makes it useful for micropower circuitry. This voltage reference can be used to make portable meters, regulators or general purpose analog circuitry with battery life approaching shelf life. Further, the wide operating current allows it to replace older references with a tighter tolerance part.

The LM185 is rated for operation over a −55˚C to 125˚C temperature range, while the LM285 is rated −40˚C to 85˚C and the LM385 0˚C to 70˚C. The LM185 is available in a hermetic TO-46 package and a leadless chip carrier package, while the LM285/LM385 are available in a low-cost TO-92 molded package, as well as S.O.

Features

- Adjustable from 1.24V to 5.30V
- Operating current of 10µA to 20mA
- 1% and 2% initial tolerance
- 1Ω dynamic impedance
- Low temperature coefficient

Connection Diagrams

TO-92
Plastic Package

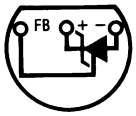

00525009

Bottom View

TO-46
Metal Can Package

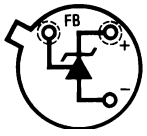

00525001

Bottom View

SOIC Package

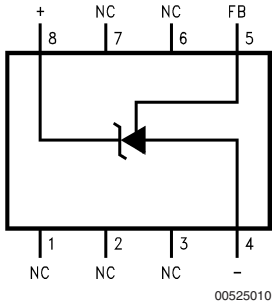

00525010

Top View

20-Leadless Chip Carrier

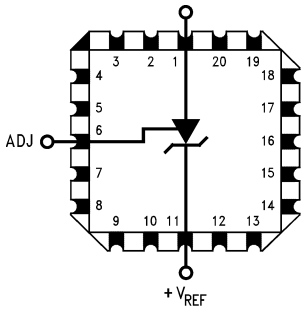

00525015

Top View

© 2005 National Semiconductor Corporation

Ordering Information

Package	Temperature Range			NSC Drawing
	−55˚C to 125˚C	−40˚C to 85˚C	0˚C to 70˚C	
TO-46	LM185BH			H03H
	LM185BH/883			
	LM185BYH			
	LM185BYH/883			
TO-92		LM285BXZ	LM385BXZ	Z03A
		LM285BYZ	LM385BYZ	
		LM285Z	LM385BZ	
			LM385Z	
8-Pin SOIC		LM285M	LM385M	M08A
		LM285BYM	LM385BM	
20-Leadless Chip Carrier	LM185BE/883			E20A

Block Diagram

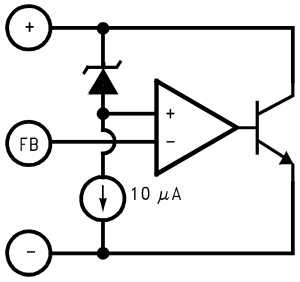

00525013

Typical Applications

1.2V Reference

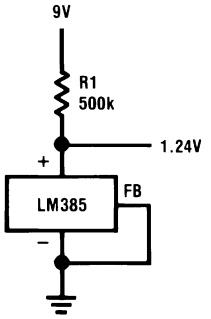

00525014

5.0V Reference

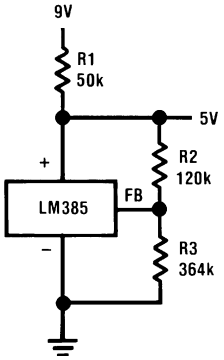

00525002

$$V_{OUT} = 1.24 \left(\frac{R3}{R2} + 1 \right)$$

Absolute Maximum Ratings (Note 1)

If Military/Aerospace specified devices are required, please contact the National Semiconductor Sales Office/ Distributors for availability and specifications.

(Note 2)

Reverse Current	30mA
Forward Current	10mA
Operating Temperature Range (Note 3)	
LM185 Series	−55˚C to 125˚C
LM285 Series	−40˚C to 85˚C
LM385 Series	0˚C to 70˚C
Storage Temperature	−55˚C to 150˚C
Soldering Information	
TO-92 Package (10 sec.)	260˚C
TO-46 Package (10 sec.)	300˚C
SO Package	
Vapor Phase (60 sec.)	215˚C
Infrared (15 sec.)	220˚C

See An-450 “Surface Mounting Methods and Their Effect on Product Reliability” for other methods of soldering surface mount devices.

Electrical Characteristics (Note 4)

Parameter	Conditions	LM185, LM285					LM385					Units (Limit)
		Typ	LM185BX, LM185BY LM185B, LM285BX, LM285BY		LM285		Typ	LM385BX, LM385BY		LM385		
			Tested Limit (Note 5)	Design Limit (Note 6)	Tested Limit (Note 5)	Design Limit (Note 6)		Tested Limit (Note 5)	Design Limit (Note 6)	Tested Limit (Note 5)	Design Limit (Note 6)	
Reference Voltage	I_R = 100µA	1.240	1.252 **1.255** 1.228 **1.215**		1.265 1.215	**1.270** **1.205**	1.240	1.252 1.228	**1.255** **1.215**	1.265 1.215	**1.270** **1.205**	V (max) V (min)
Reference Voltage Change with Current	$I_{MIN} < I_R < 1mA$	0.2	1	**1.5**	1	**1.5**	0.2	1	**1.5**	1	**1.5**	mV
	1mA < I_R < 20mA	4	10	**20**	10	**20**	5	15	**25**	15	**25**	(max)
Dynamic Output Impedance	I_R = 100µA, f = 100Hz											
	I_{AC} = 0.1 I_R V_{OUT} = V_{REF}	0.3					0.4					Ω
	V_{OUT} = 5.3V	0.7					1					
Reference Voltage Change with Output Voltage	I_R = 100µA	1	3	**6**	3	**6**	2	5	**10**	5	**10**	mV (max)
Feedback Current		13	20	**25**	20	**25**	16	30	**35**	30	**35**	nA (max)
Minimum Operating Current (see curve)	V_{OUT} = V_{REF}	6	9	**10**	9	**10**	7	11	**13**	11	**13**	µA
	V_{OUT} = 5.3V	30	45	**50**	45	**50**	35	55	**60**	55	**60**	(max)
Output Wideband Noise	I_R = 100µA, 10Hz < f < 10kHz											
	V_{OUT} = V_{REF}	50					50					$µV_{rms}$
	V_{OUT} = 5.3V	170					170					

Electrical Characteristics (Note 4) (Continued)

Parameter	Conditions	LM185, LM285					LM385					Units (Limit)
		Typ	LM185BX, LM185BY LM185B, LM285BX, LM285BY		LM285		Typ	LM385BX, LM385BY		LM385		
			Tested Limit (Note 5)	Design Limit (Note 6)	Tested Limit (Note 5)	Design Limit (Note 6)		Tested Limit (Note 5)	Design Limit (Note 6)	Tested Limit (Note 5)	Design Limit (Note 6)	
Average Temperature Coefficient (Note 7)	I_R = 100µA X Suffix		**30**					**30**				ppm/˚c
	Y Suffix		**50**					**50**				(max)
	All Others			**150**		**150**			**150**		**150**	
Long Term Stability	I_R = 100µA, T = 1000 Hr, T_A = 25˚C ± 0.1˚C	20					20					ppm

Note 1: Absolute Maximum Ratings indicate limits beyond which damage to the device may occur. Operating Ratings indicate conditions for which the device is intended to be functional, but do not guarantee specific performance limits. For guaranteed specifications and test conditions, see the Electrical Characteristics. The guaranteed specifications apply only for the test conditions listed.

Note 2: Refer to RETS185H for military specifications.

Note 3: For elevated temperature operation, $T_J$max is:

LM185	150˚C
LM285	125˚C
LM385	100˚C

Thermal Resistance	TO-92	TO-46	SO-8
θ_{JA} (Junction to Ambient)	180˚C/W (0.4" leads) 170˚C/W (0.125" leads)	440˚C/W	165˚C/W
θ_{JC} (Junction to Case)	N/A	80˚C/W	N/A

Note 4: Parameters identified with **boldface type** apply at temperature extremes. All other numbers apply at $T_A = T_J$ = 25˚C. Unless otherwise specified, all parameters apply for $V_{REF} < V_{OUT} < 5.3V$.

Note 5: Guaranteed and 100% production tested.

Note 6: Guaranteed, but not 100% production tested. These limits are not to be used to calculate average outgoing quality levels.

Note 7: The average temperature coefficient is defined as the maximum deviation of reference voltage at all measured temperatures from T_{MIN} to T_{MAX}, divided by $T_{MAX} - T_{MIN}$. The measured temperatures are –55, –40, 0, 25, 70, 85, 125˚C.

Typical Performance Characteristics

Temperature Drift of 3 Representative Units

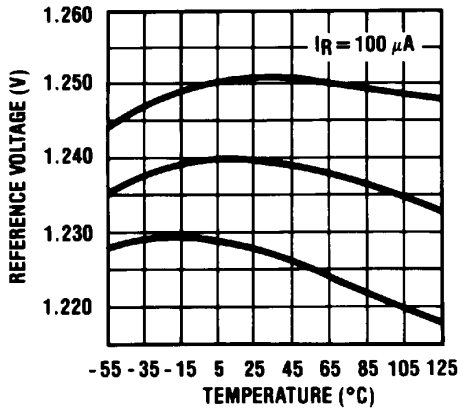

00525016

Feedback Current

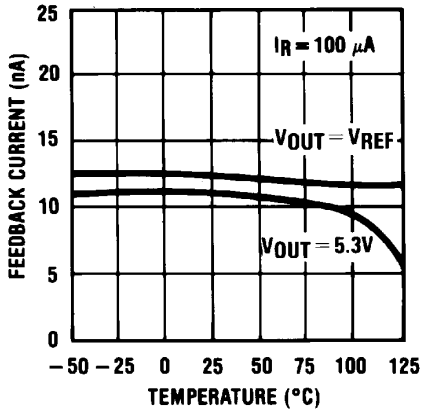

00525017

Minimum Operating Current

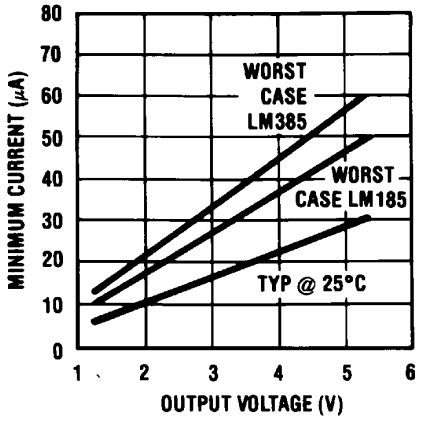

00525018

Reverse Characteristics

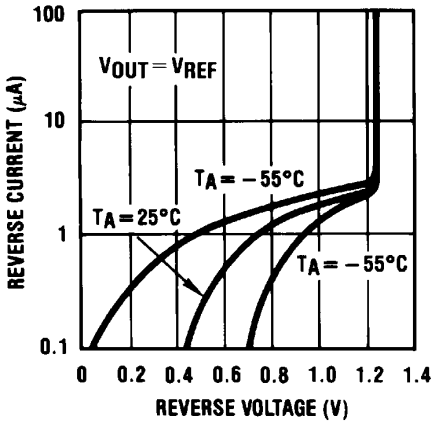

00525019

Reverse Characteristics

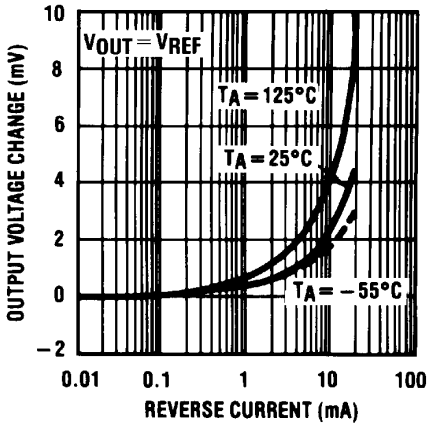

00525020

Forward Characteristics

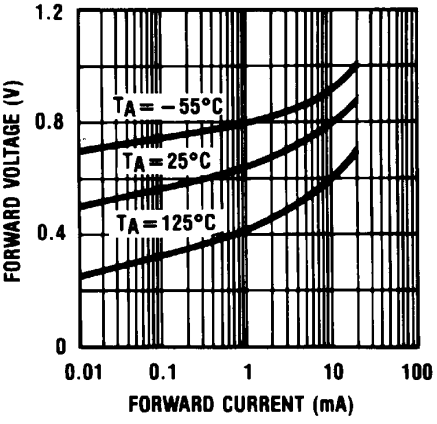

00525021

Typical Performance Characteristics (Continued)

Output Noise Voltage

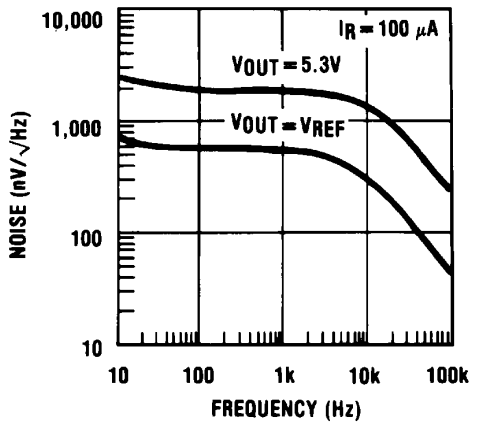

00525022

Dynamic Output Impedance

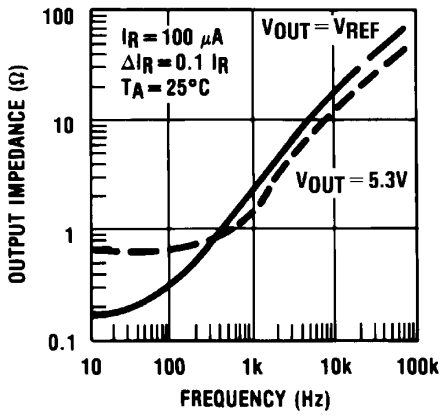

00525023

Response Time

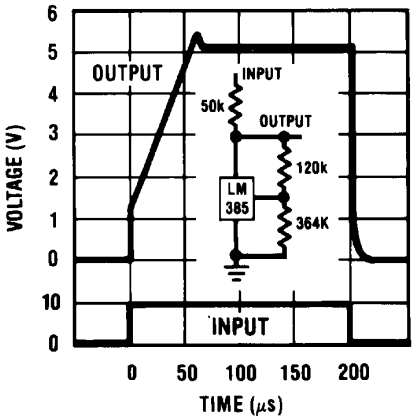

00525024

Temperature Coefficient Typical

LM185 LM285 LM385

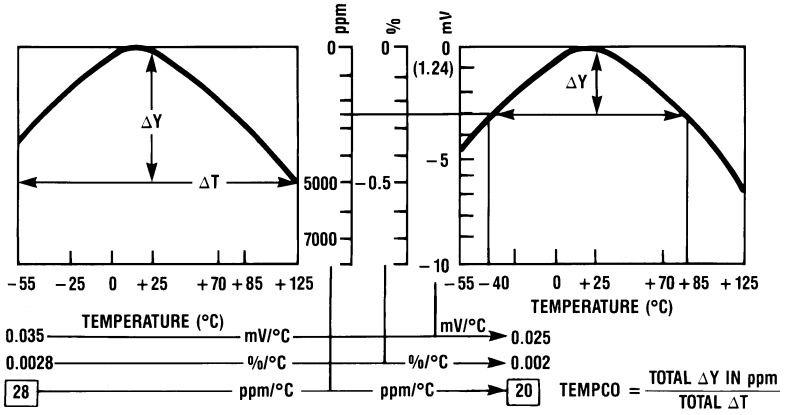

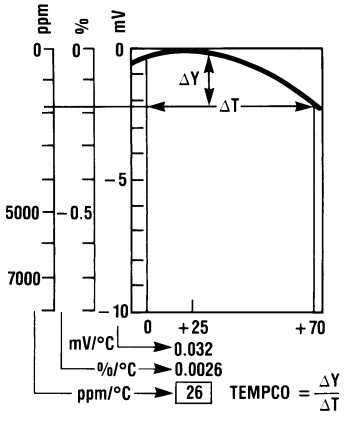

00525004

Typical Applications

Precision 10V Reference

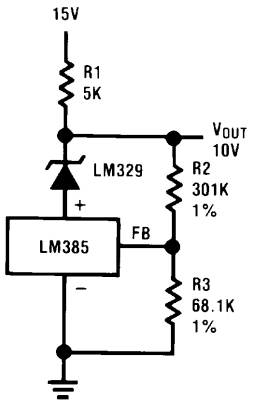

00525025

Low AC Noise Reference

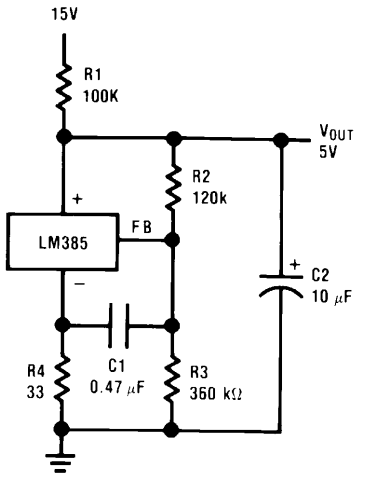

00525026

25V Low Current Shunt Regulator

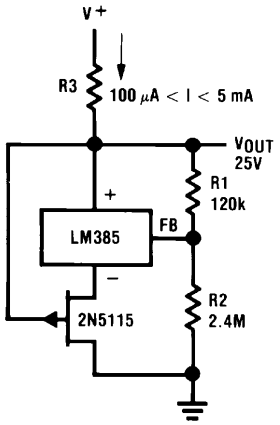

00525027

200 mA Shunt Regulator

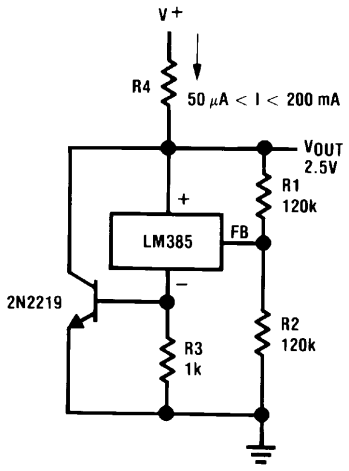

00525028

Typical Applications (Continued)

Series-Shunt 20 mA Regulator

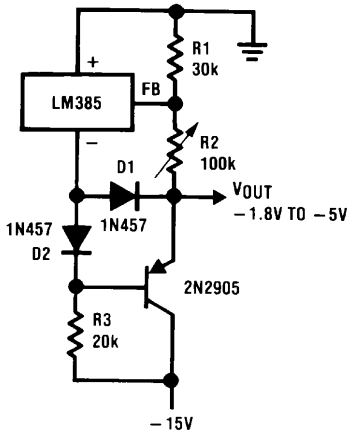

00525029

High Efficiency Low Power Regulator

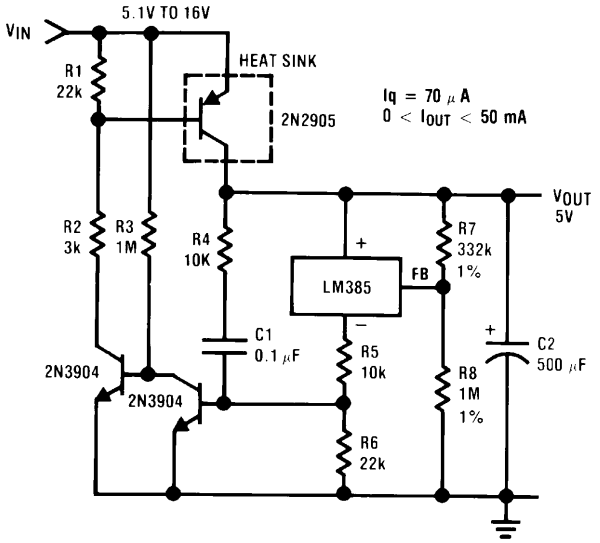

00525030

Voltage Level Detector

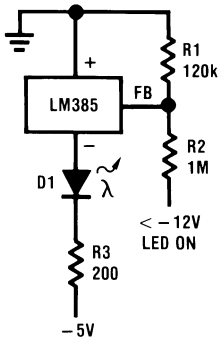

00525031

Voltage Level Detector

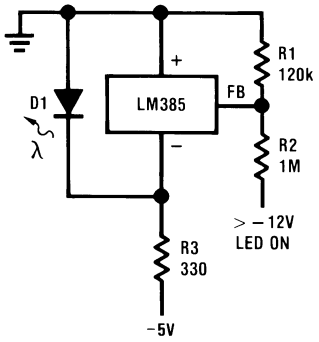

00525032

Fast Positive Clamp
2.4V + ΔV_{D1}

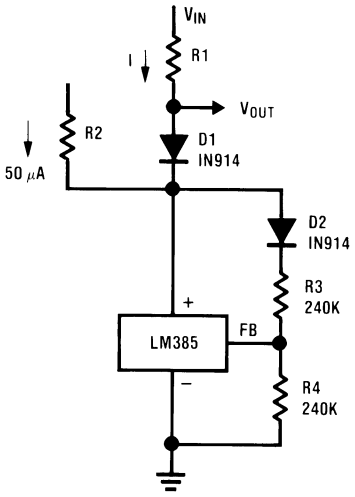

00525033

Bidirectional Clamp
±2.4V

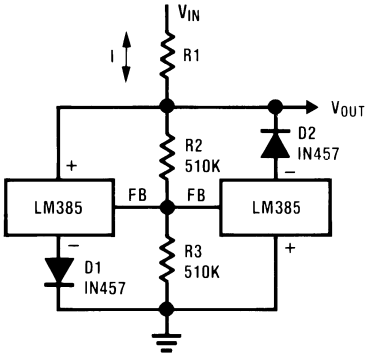

00525034

Typical Applications (Continued)

Bidirectional Adjustable Clamp
±1.8V to ±2.4V

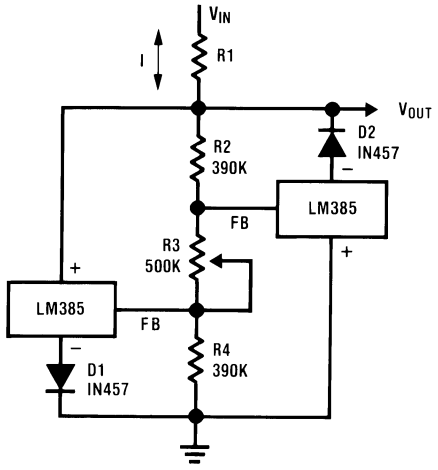

00525035

Bidirectional Adjustable Clamp
±2.4V to ±6V

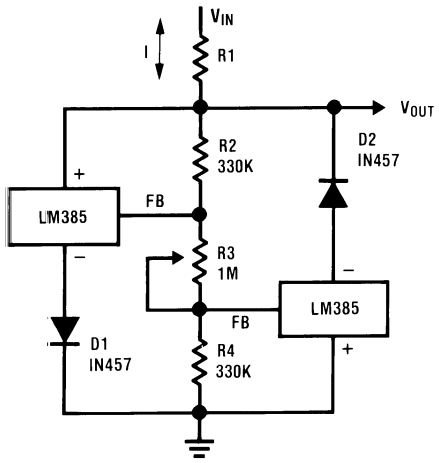

00525036

Simple Floating Current Detector

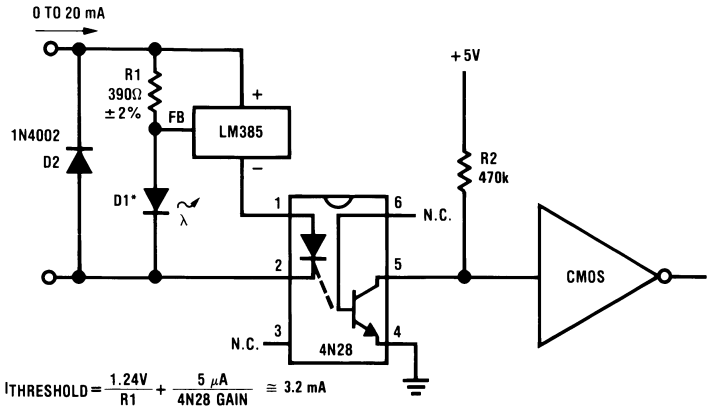

00525037

Current Source

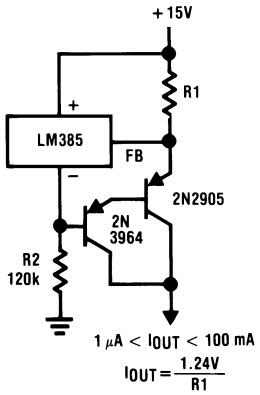

00525038

Typical Applications (Continued)

Precision Floating Current Detector

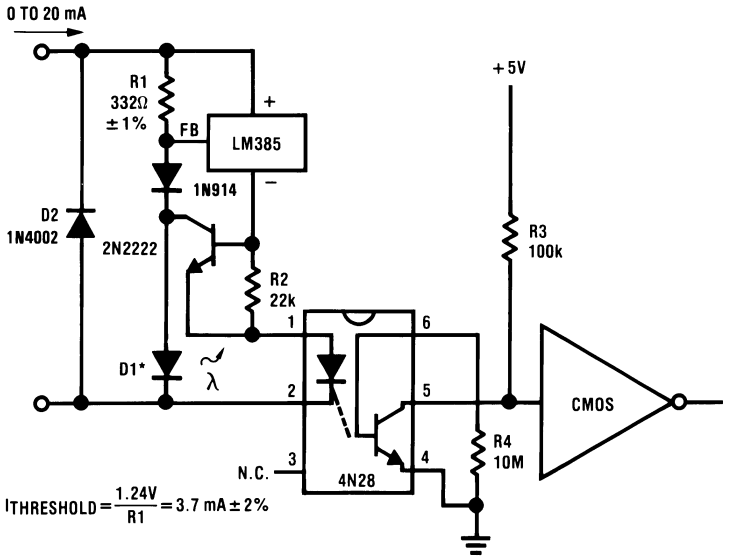

00525039

*D1 can be any LED, V_F=1.5V to 2.2V at 3 mA. D1 may act as an indicator. D1 will be on if $I_{THRESHOLD}$ falls below the threshold current, except with I=O.

Centigrade Thermometer, 10mV/°C

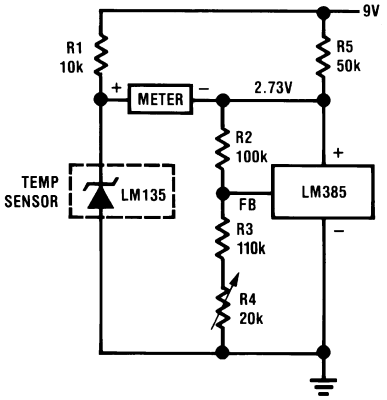

00525011

Freezer Alarm

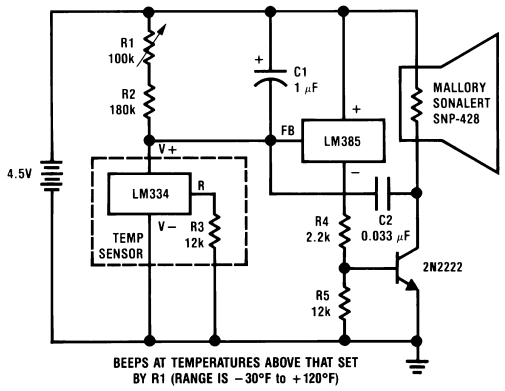

00525012

Schematic Diagram

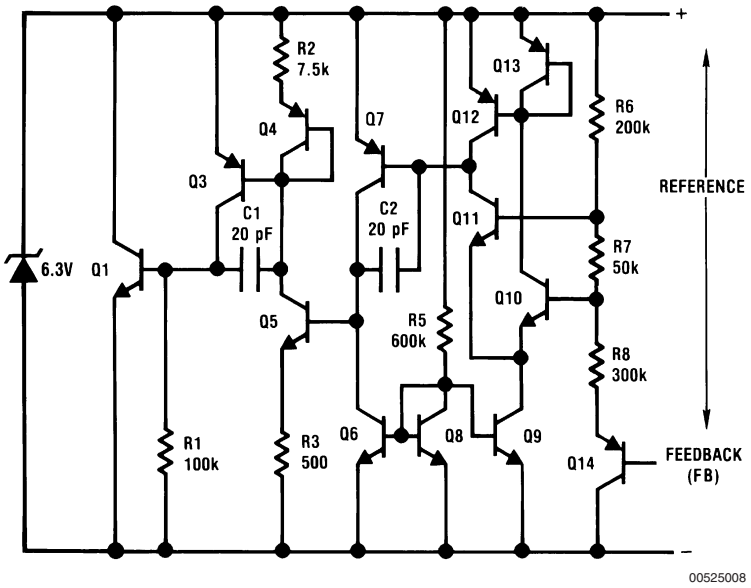

Physical Dimensions inches (millimeters)

unless otherwise noted

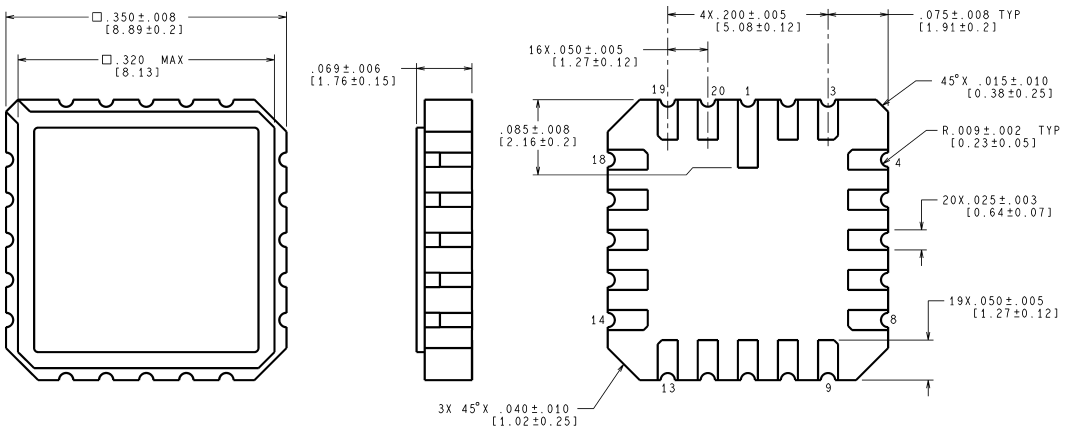

CONTROLLING DIMENSION IS INCH
VALUES IN [ ] ARE MILLIMETERS

E20A (Rev F)

20-Leadless Chip Carrier (E)
NS Package Number E20A

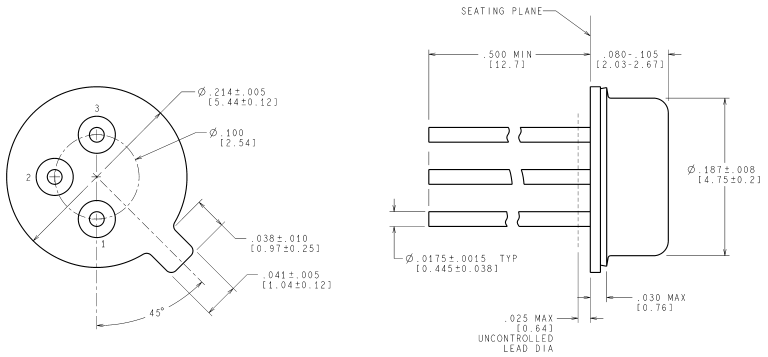

CONTROLLING DIMENSION IS INCH
VALUES IN [ ] ARE IN MILLIMETERS

H03H (Rev F)

TO-46 Metal Can Package (H)
NS Package Number H03H

Physical Dimensions inches (millimeters) unless otherwise noted (Continued)

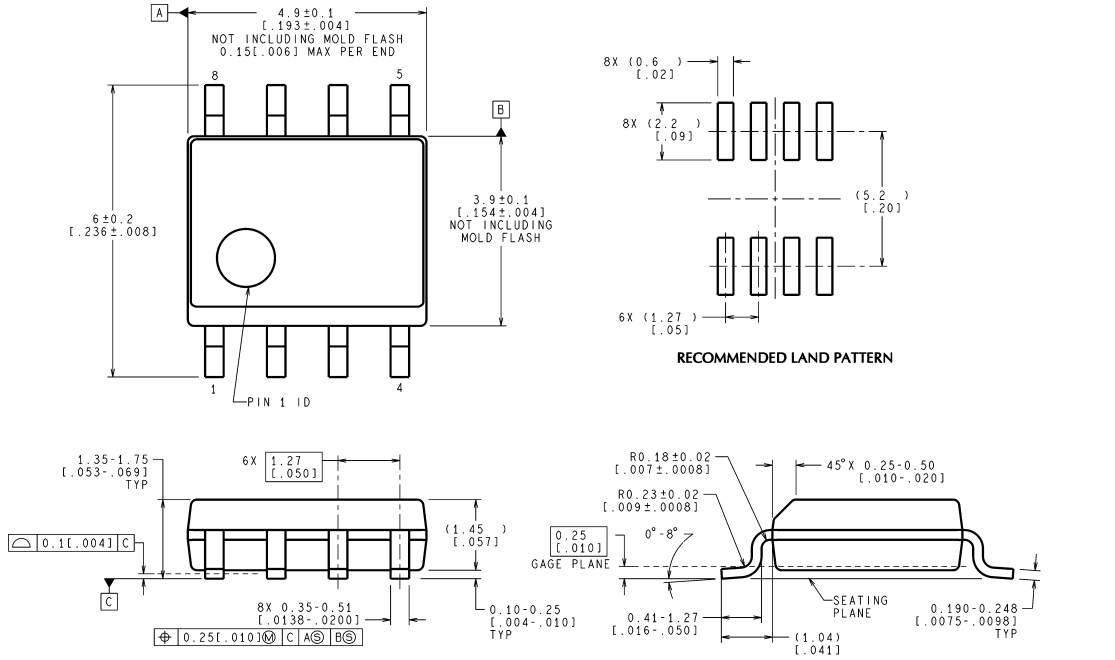

CONTROLLING DIMENSION IS MILLIMETER
VALUES IN [ ] ARE INCHES
DIMENSIONS IN ( ) FOR REFERENCE ONLY

M08A (Rev K)

SO Package (M)
NS Package Number M08A

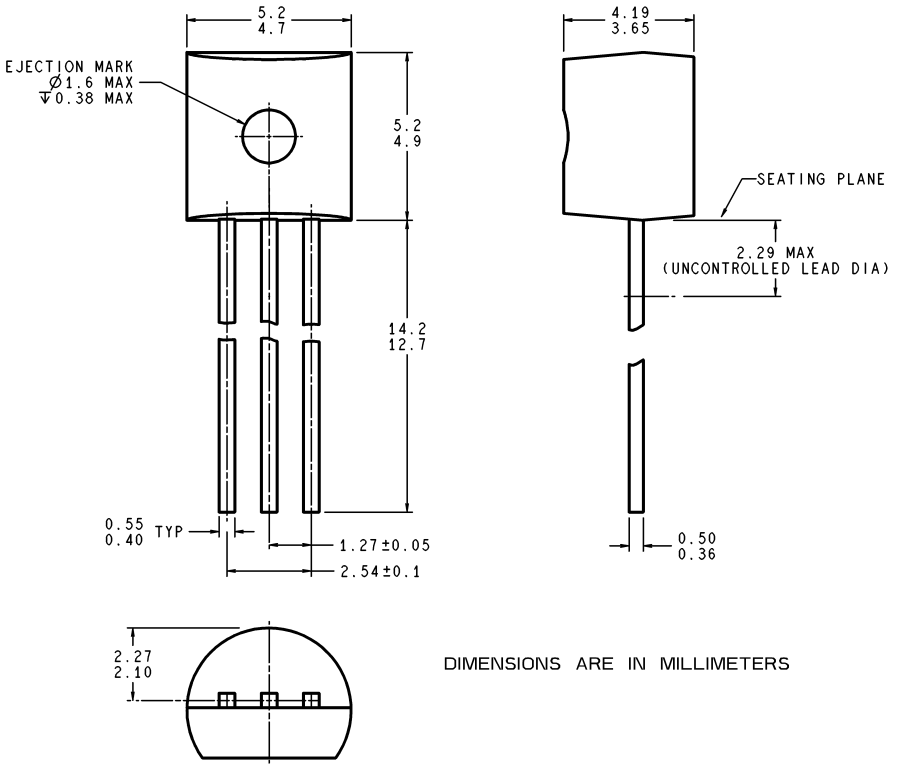

DIMENSIONS ARE IN MILLIMETERS

Z03A (Rev G)

TO-92 Plastic Package (Z)
NS Package Number Z03A

Notes

National does not assume any responsibility for use of any circuitry described, no circuit patent licenses are implied and National reserves the right at any time without notice to change said circuitry and specifications.

For the most current product information visit us at www.national.com.

LIFE SUPPORT POLICY

NATIONAL'S PRODUCTS ARE NOT AUTHORIZED FOR USE AS CRITICAL COMPONENTS IN LIFE SUPPORT DEVICES OR SYSTEMS WITHOUT THE EXPRESS WRITTEN APPROVAL OF THE PRESIDENT AND GENERAL COUNSEL OF NATIONAL SEMICONDUCTOR CORPORATION. As used herein:

1. Life support devices or systems are devices or systems which, (a) are intended for surgical implant into the body, or (b) support or sustain life, and whose failure to perform when properly used in accordance with instructions for use provided in the labeling, can be reasonably expected to result in a significant injury to the user.
2. A critical component is any component of a life support device or system whose failure to perform can be reasonably expected to cause the failure of the life support device or system, or to affect its safety or effectiveness.

BANNED SUBSTANCE COMPLIANCE

National Semiconductor manufactures products and uses packing materials that meet the provisions of the Customer Products Stewardship Specification (CSP-9-111C2) and the Banned Substances and Materials of Interest Specification (CSP-9-111S2) and contain no ''Banned Substances'' as defined in CSP-9-111S2.

National Semiconductor
Americas Customer
Support Center
Email: new.feedback@nsc.com
Tel: 1-800-272-9959

www.national.com

National Semiconductor
Europe Customer Support Center
Fax: +49 (0) 180-530 85 86
Email: europe.support@nsc.com
Deutsch Tel: +49 (0) 69 9508 6208
English Tel: +44 (0) 870 24 0 2171
Français Tel: +33 (0) 1 41 91 8790

National Semiconductor
Asia Pacific Customer
Support Center
Email: ap.support@nsc.com

National Semiconductor
Japan Customer Support Center
Fax: 81-3-5639-7507
Email: jpn.feedback@nsc.com
Tel: 81-3-5639-7560