SPECIFICATION
FOR
APPROVAL

( ) **Preliminary Specification**
(◆) **Final Specification**

Title	15.0” XGA TFT LCD

BUYER	GateWay(Arima)
MODEL	

SUPPLIER	LG.Philips LCD CO., Ltd.
*MODEL	LM150X05
SUFFIX	C3

*When you obtain standard approval,
please use the above model name without suffix

SIGNATURE	DATE
/	
/	
/	

Please return 1 copy for your confirmation with your signature and comments.

APPROVED BY	DATE
Paul Lee / G.Manager	
REVIEWED BY	
S. G. Hong / Manager	
PREPARED BY	
J. Y. Lee / Engineer	

Product Engineering Dept.
LG. Philips LCD Co., Ltd

NO.	ITEM	Page
-	COVER	1
-	CONTENTS	2
-	RECORD OF REVISIONS	3
1	GENERAL DESCRIPTION	4
2	ABSOLUTE MAXIMUM RATINGS	5
3	ELECTRICAL SPECIFICATIONS	6
3-1	ELECTRICAL CHARACTREISTICS	6
3-2	INTERFACE CONNECTIONS	8
3-3	SIGNAL TIMING SPECIFICATIONS	11
3-4	SIGNAL TIMING WAVEFORMS	12
3-5	COLOR INPUT DATA REFERENECE	13
3-6	POWER SEQUENCE	14
3-7	POWER DIP CONDITION	15
4	OPTICAL SPECIFICATIONS	16
5	MECHANICAL CHARACTERISTICS	20
6	RELIABILITY	23
7	INTERNATIONAL STANDARDS	24
7-1	SAFETY	24
7-2	EMC	24
8	PACKING	25
8-1	DESIGNATION OF LOT MARK	25
8-2	PACKING FORM	25
9	PRECAUTIONS	26
9-1	MOUNTING PRECAUTIONS	26
9-2	OPERATING PRECAUTIONS	26
9-3	ELECTROSTATIC DISCHARGE CONTROL	27
9-4	PRECAUTIONS FOR STRONG LIGHT EXPOSURE	27
9-5	STORAGE	27
9-6	HANDLING PRECAUTIONS FOR PROTECTION FILM	27

RECORDS OF REVISIONS

Revision No	Date	Page	DESCRIPTION
0.0	Apr. 27, 2001	-	First Draft
1.0	Jul. 31, 2001	-	Second Draft (Fixed values)
1.1	Oct. 10, 2001	22	Backlight bar-cord added
		27	9.6 Handling precautions revised
			(The protection film is attached to the bezel…)

1. General Description

The LM150X05-C3 is a Color Active Matrix Liquid Crystal Display with an integral Cold Cathode Fluorescent Lamp(CCFL) backlight system. The matrix employs a-Si Thin Film Transistor as the active element. It is a transmissive type display operating in the normally white mode. This TFT-LCD has a 15.0 inches diagonally measured active display area with XGA resolution(768 vertical by 1024 horizontal pixel array). Each pixel is divided into Red, Green and Blue sub-pixels or dots which are arranged in vertical stripes. Gray scale or the brightness of the sub-pixel color is determined with a 6-bit gray scale signal for each dot, thus, presenting a palette of more than 16M colors.

The LM150X05-C3 has been designed to apply the LVDS(8-bit,1-port) interface method.

The LM150X05-C3 LCD is intended to support applications where high brightness, wide viewing angle, high color saturation, and high color depth are very important. In combination with the vertical arrangement of the sub-pixels, the LM150X05-C3 characteristics provide an excellent flat panel display for office automation products such as monitors.

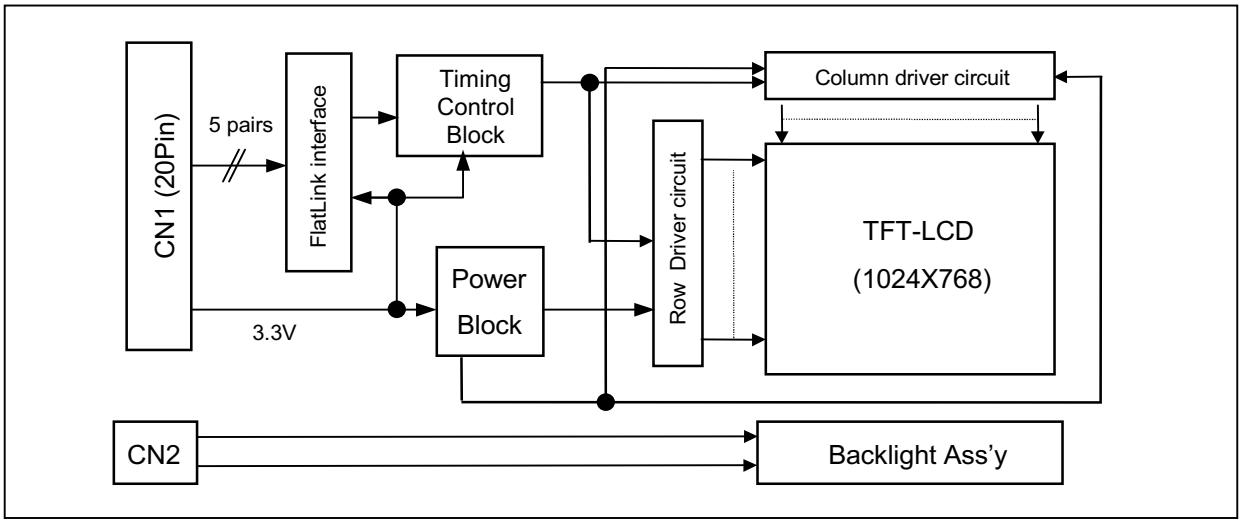

[figure 1] Block diagram

General Features

Active screen size	15.0 inches(304.1 x 228.1) diagonal
Outline Dimension	331.3(H) × 257.9(V) × 11.0(D) mm (Typ)
Pixel Pitch	0.297 mm x 0.297mm
Pixel format	1024 horiz. By 768 vert. Pixels RGB stripes arrangement
Color depth	8-bit(With FRC), 16M colors
Luminance, white	200 cd/m^2(Typ.)
Power Consumption	Total 9.2 Watt(Typ.)
Weight	1030g (Typ)
Display operating mode	Transmissive mode, normally white
Surface treatments	Hard coating(3H) Anti-glare treatment of the front polarizer

2. Absolute Maximum Ratings

The following are maximum values which, if exceeded, may cause operation or damage to the unit.

Table 1. ABSOLUTE MAXIMUM RATINGS

Parameter	symbol	Values		Units	Notes
		Min.	Max.		
Power Input Voltage	V_{CC}	-0.3	3.6	Vdc	At 25 ± 2°C
Operating Temperature	T_{OP}	0	50	°C	
Storage Temperature	T_{ST}	-20	60	°C	1
Operating Ambient Humidity	H_{OP}	10	90	%RH	1
Storage Humidity	H_{ST}	10	90	%RH	1

Note : 1. Temperature and relative humidity range are shown in the [figure 2].
Wet bulb temperature should be 40 °C Max, and no condensation of water.

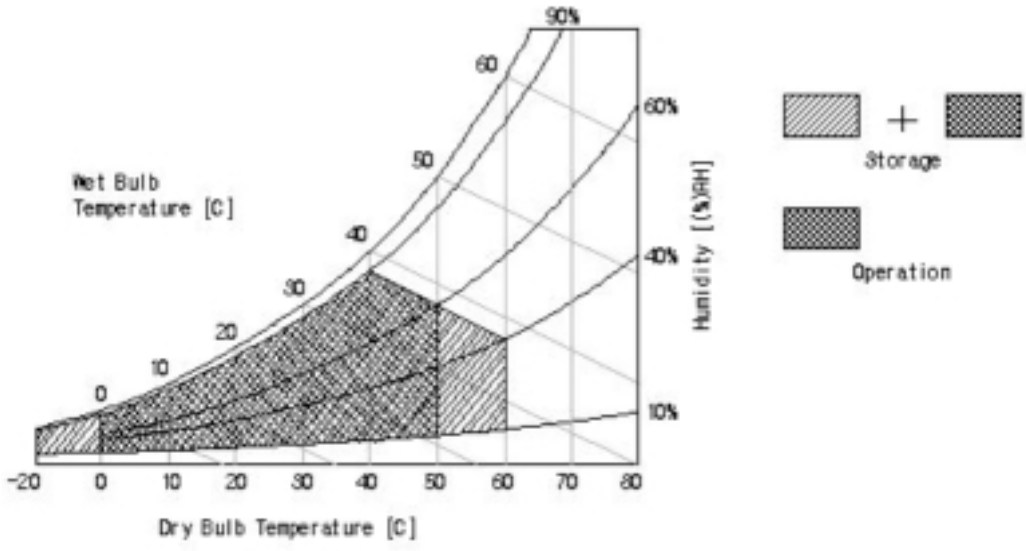

[figure 2] Temperature and relative humidity

3. Electrical Specifications

3-1. Electrical Characteristics

The LM150X05-C3 requires two power inputs. One is employed to power the LCD electronics and to drive the TFT array and liquid crystal. Another which powers the CCFL, is typically generated by an inverter. The inverter is an external unit to the LCD.

Table 2. ELECTRICAL CHARACTERISTICS

Parameter	Symbol	Values			Units	Notes
		Min.	Typ.	Max.		
MODULE :						
Signal Input Voltage	V_I	3.0	3.3	3.6	V	
Power Supply Input Voltage	V_{CC}	3.15	3.3	3.45	V	
Permissive power input ripple	V_{RF}	-	-	0.1	V_{PP}	
Power Supply Input Current	I_{CC}	-	0.45	0.75	A	1
Power Consumption	P_{CC}	-	1.5	2.7	Watts	
Rush Current	I_{RUSH}		1.0	2.0	A	2
LAMP :						
Operating Voltage	V_{BL}	460	480	590	V_{RMS}	3
Operating Current	I_{BL}	3.0	8.0	9.0	mA	
Established Starting Voltage	V_{BS}					4
at 25 ˚C		-	-	850	V_{RMS}	
at 0 ˚C		-	-	1100	V_{RMS}	
Operating Frequency	f_{BL}	45	60	80	kHz	5
Discharge Stabilization Time	T_S			3	Minutes	6
Power Consumption	P_{BL}	-	7.68	8.44	Watts	7
Life Time		30,000	-	-	Hrs	8

Note. The design of the inverter must have specifications for the lamp in LCD Assembly.
The performance of the Lamp in LCM, for example life time or brightness, is extremely influenced by the characteristics of the DC-AC Inverter. So all the parameters of an inverter should be carefully designed so as not to produce too much leakage current from high-voltage output of the inverter. When you design or order the inverter, please make sure unwanted lighting caused by the mismatch of the lamp and the inverter(no lighting,flicker,etc) never occurs.When you confirm it,the LCD Assembly should be operated in the same condition as installed in your instrument.

Note. Do not attach a conducting tape to lamp connecting wire.. If the lamp wire attach to conducting tape, TFT-LCD Module have a low luminance and the inverter has abnormal action because leakage current occurs between lamp wire and conducting tape.

1. The specified current and power consumption are under the V_{CC}=3.3V, 25˚C, f_V(frame frequency) =60Hz condition whereas mosaic(black & white) pattern shown in the [figure 3] is displayed.
2. The duration of rush current is about 20ms.
3. Oporating voltage is measured under 25℃.The variance of the voltage is ±10%.
4. The voltage above V_{BS} should be applied to the lamps for more than 1second for start-up. Otherwise,the lamps may not be turned on.

5. The output of the inverter must have symmetrical(negative and positive) voltage waveform and symmetrical current waveform.(Unsymmetrical ratio is less than 10%) Please do not use the inverter which has unsymmetrical voltage and unsymmetrical current and spike wave.
   Lamp frequency may produce interference with horizontal synchronous frequency and as a result this may cause beat on the display.Therefore lamp frequency shall be as away as possible from the horizontal synchronous frequency and from its harmonics in order to prevent interference.
6. Let's define the brightness of the lamp after being lighted for 5 minutes as 100%.
   T_s is the time required for the brightness of the center of the lamp to be not less than 95%.
   The used lamp current is the lamp typical current.
7. The lamp power consumption shown above does not include loss of external inverter under 25℃.
   The used lamp current is the lamp typical current.
8. The life time is determined as the time at which brightness of lamp is 50% compared to that of initial value at the typical lamp current on condition of continuous operating at 25 ±2℃.
9. Requirements for a system inverter design, which is intended to have a better display performance, a better power efficiency and a more reliable lamp.
   It shall help increase the lamp lifetime and reduce its leakage current.
   a. The unbalance rate of the inverter waveform should be 10% below;
   b. The distortion rate of the waveform should be within √2 ±10%;
   c. The ideal sine wave form shall be symmetric in positive and negative polarities.

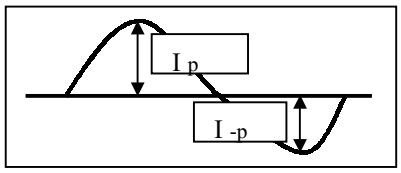

*** Asymmetry rate = $| I_p - I_{-p} | / I_{rms}$ * 100%**

*** Distortion rate = I_p (or I_{-p}) / I_{rms}**

10. Inverter open voltage must be more than lamp starting voltage.

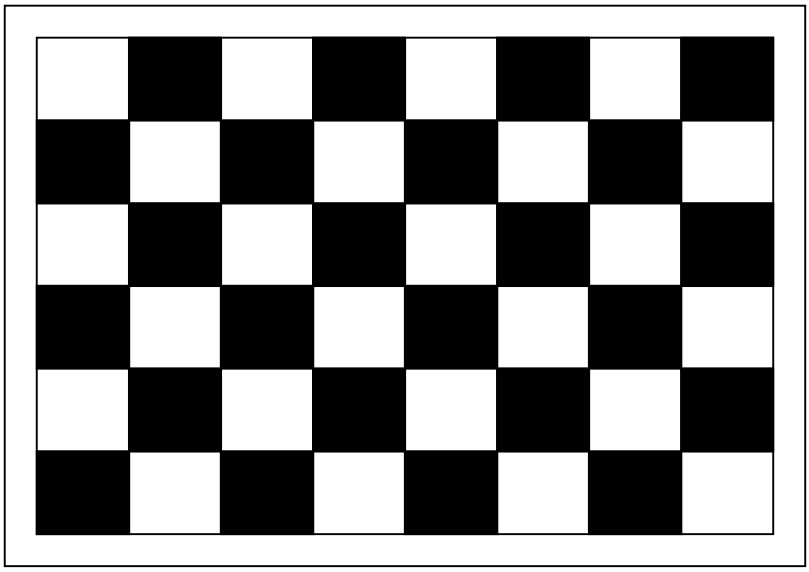

[figure 3] mosaic pattern for Power Consumption measurement

3-2. Interface Connections

This LCM has three interface connections, a 20 pin connector is used for the module electronics and, two three pin connectors are used for the integral back light system.
The interface pin configuration for the connector is shown in the table below.
LCD Connector :DF19K-20P-1H(Hirose Electric Co.,Ltd.)
Mating Connector : DF19G-20S-1C(Hirose Electric Co.,Ltd.)

Table 3. MODULE CONNECTOR PIN CONFIGURATION

Pin	Symbol	Description	Notes
1	Vcc	3.3V(typical)	**Interface chips** LCD : THC63LVDF84A System : DS90C385 or SN75LVDS83 or TH63LVDM83A *Pin to Pin compatible with TI and Thine *Pin assign is shown in the Table 4. Caution : NS LVDS Tx has unstable current by the change screen pattern.
2	Vcc	3.3V(typical)	
3	GND	GND	
4	GND	GND	
5	Rx0-	LVDS signal(-)	
6	Rx0+	LVDS signal(+)	
7	GND	GND	
8	Rx1-	LVDS signal(-)	
9	Rx1+	LVDS signal(+)	
10	GND	GND	
11	Rx2-	LVDS signal(-)	
12	Rx2+	LVDS signal(+)	
13	GND	GND	
14	RxC-	LVDS signal(-)	
15	RxC+	LVDS signal(+)	
16	GND	GND	
17	Rx3-	LVDS signal(-)	
18	Rx3+	LVDS signal(+)	
19	GND	GND	
20	NC	No Connection	

Note 1. All GND(ground) pins should be connected together and to Vss which should also be connected to the LCD's metal frame.
2. All Vcc(power input) pins should be connected together.

Table 4. REQUIRED SIGNAL ASSIGNMENT FOR FlatLink Transmitter

Pin #	Pin Name	Require Signals	IN/OUT	Pin #	Pin Name	Require Signals	IN/OUT
1	VCC	Vcc		56	TXIN4	R6	I
2	TXIN5	R1	I	55	TXIN3	T5	I
3	TXIN6	R7	I	54	TXIN2	T4	I
4	TXIN7	G2	I	53	GND	GND	
5	GND	GND		52	TXIN1	R3	I
6	TXIN8	G3	I	51	TXIN0	R2	I
7	TXIN9	G4	I	50	TXIN27	R0	I
8	TXIN10	G0	I	49	LVDSGND	LVDSGND	
9	VCC	Vcc		48	TXOUT0-	TX0-	O
10	TXIN11	G1	I	47	TXOUT0+	TX0+	O
11	TXIN12	G5	I	46	TXOUT1-	TX1-	O
12	TXIN13	G6	I	45	TXOUT1+	TX1+	O
13	GND	GND		44	LVDSVCC	LVDSVCC	
14	TXIN14	G7	I	43	LVDSGND	LVDSGND	
15	TXIN15	B2	I	42	TXOUT2-	TX2-	O
16	TXIN16	B0	I	41	TXOUT2+	TX2+	O
17	R_FB	R_FB	I	40	TXCOUT-	TXC-	O
18	TXIN17	B1	I	39	TXCOUT+	TXC+	O
19	TXIN18	B3	I	38	TXOUT3-	TX3-	O
20	TXIN19	B4	I	37	TXOUT3+	TX3+	O
21	GND	GND		36	LVDSGND	LVDSGND	
22	TXIN20	B5	I	35	PLLGND	PLLGND	
23	TXIN21	B6	I	34	PLLVCC	PLLVCC	
24	TXIN22	B7	I	33	PLLGND	PLLGND	
25	TXIN23	RES	I	32	PD	PD	I
26	VCC	Vcc		31	TXCIN	DCLK	I
27	TXIN24	Hsync	I	30	TXIN26	DATA ENABLE	I
28	TXIN25	Vsync	I	29	GND	GND	

Notes 1. Refer to LVDS Transmitter Data Sheet for detail descriptions.
2. 7 means MSB and 0 means LSB at R,G,B pixel data

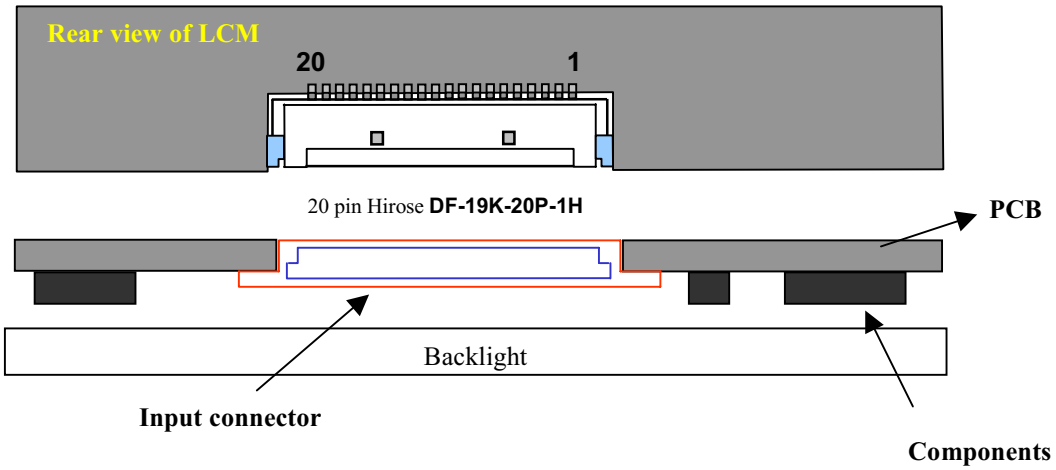

[figure 4] Connector diagram

The backlight interface connector is a model BHR-03VS-1, manufactured by JST. The mating connector part number is SM02(8.0)B-BHS-1-TB or equivalent.
The pin configuration for the connector is shown in the table 5.

Table 5. BACKLIGHT CONNECTOR PIN CONFIGURATION

Pin	Symbol	Description	Notes
1	HV	Power supply for lamp (High voltage side)	1
2	NC	No Connect	
3	LV	Power supply for lamp (Low voltage side)	

Notes : 1. The high voltage side terminal is colored pink.

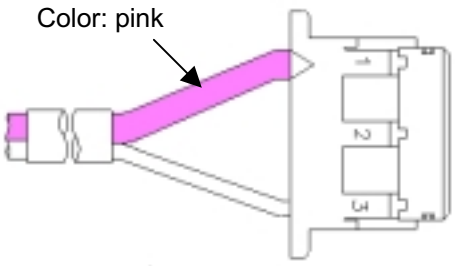

[figure 5] Backlight connector view

3-3. Signal Timing Specifications

This is the signal timing required at the input of the LVDS Transmitter. All of the interface signal timing should be satisfied with the following specifications for it's proper operation.

Table 6. Timing Table

Parameter		Symbol	Min.	Typ.	Max.	Unit	Notes
Dclk	Period	t_{CLK}	14.29	15.4	20	ns	
	Frequency	f_{CLK}	50	65	70	MHz	
Hsync	Period	t_{HP}	1208	1344	1360	t_{CLK}	
	Width	t_{WH}	16	136	240		
Vsync	Period	t_{VP}	780	806	830	t_{HP}	
	Frequency	f_{V}	50	60	75	Hz	
	Width	t_{WV}	2	6	24	t_{HP}	
DE (Data Enable)	Horizontal Valid	t_{HV}	1024	1024	1024	t_{CLK}	
	Horizontal Back Porch	t_{HBP}	16	24	-		
	Horizontal Front Porch	t_{HFP}	24	160	-		
	Horizontal Blank	-	56	320	$t_{HP} - t_{HV}$		$t_{WH} + t_{HBP} + t_{HFP}$
	Vertical Valid	t_{VV}	768	768	768	t_{HP}	
	Vertical Back Porch	t_{VBP}	2	29	-		
	Vertical Front Porch	t_{VFP}	1	3	-		
	Vertical Blank	-	5	38	$t_{VP} - t_{VV}$		$t_{WV} + t_{VBP} + t_{VFP}$
	Set up time	t_{SI}	3	-	-	ns	For Dclk
	Hold time	t_{HI}	3	-	-		
Data	Set up time	t_{SD}	3	-	-		
	Hold time	t_{HD}	3	-	-		

Notes : 1. Do not change the period of Hsync during Vertical Back Porch and Valid, because LCM inner control signals are made by the Hsync.

3-4. Signal Timing Waveforms

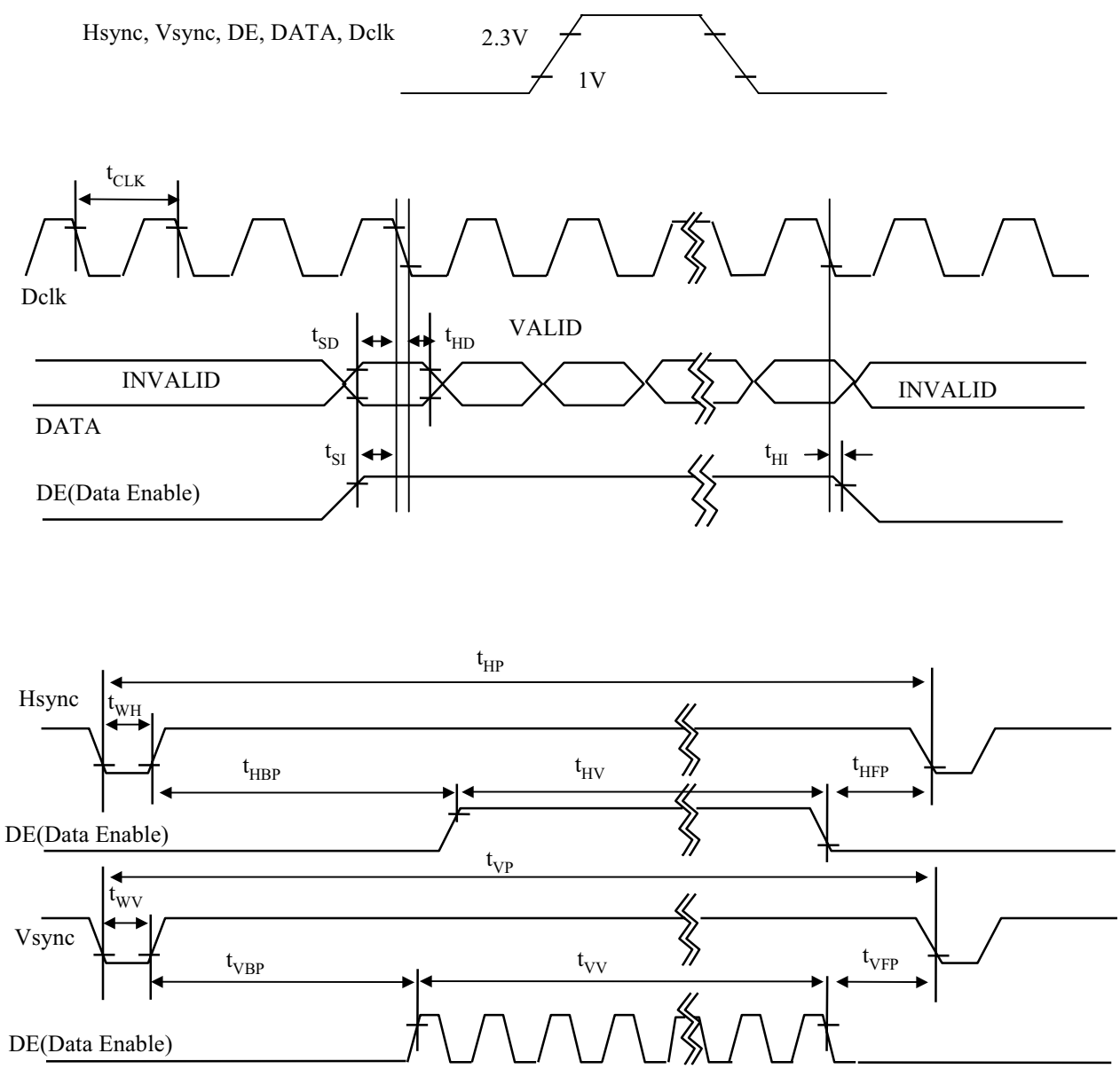

[figure 6] Signal Timing Waveforms

3-5. Color Input Data Reference

The brightness of each primary color(red,green and blue) is based on the 8-bit gray scale data input for the color ; the higher the binary input, the brighter the color. The table below provides a reference for color versus data input.

Table 7. COLOR DATA REFERENCE

Color		Input Color Data																							
		Red								Green								Blue							
		MSB							LSB	MSB							LSB	MSB							LSB
		R7	R6	R5	R4	R3	R2	R1	R0	G7	G6	G5	G4	G3	G2	G1	G0	B7	B6	B5	B4	B3	B2	B1	B0
Basic Colors	Black	0	0	0	0	0	0	0	0	0	0	0	0	0	0	0	0	0	0	0	0	0	0	0	0
	Red(255)	1	1	1	1	1	1	1	1	0	0	0	0	0	0	0	0	0	0	0	0	0	0	0	0
	Green(255)	0	0	0	0	0	0	0	0	1	1	1	1	1	1	1	1	0	0	0	0	0	0	0	0
	Blue(255)	0	0	0	0	0	0	0	0	0	0	0	0	0	0	0	0	1	1	1	1	1	1	1	1
	Cyan	0	0	0	0	0	0	0	0	1	1	1	1	1	1	1	1	1	1	1	1	1	1	1	1
	Magenta	1	1	1	1	1	1	1	1	0	0	0	0	0	0	0	0	1	1	1	1	1	1	1	1
	Yellow	1	1	1	1	1	1	1	1	1	1	1	1	1	1	1	1	0	0	0	0	0	0	1	0
	White	1	1	1	1	1	1	1	1	1	1	1	1	1	1	1	1	1	1	1	1	1	1	1	1
Red	Red(000) Dark	0	0	0	0	0	0	0	0	0	0	0	0	0	0	0	0	0	0	0	0	0	0	0	0
	Red(001)	0	0	0	0	0	0	0	1	0	0	0	0	0	0	0	0	0	0	0	0	0	0	0	0
	Red(002)	0	0	0	0	0	0	1	0	0	0	0	0	0	0	0	0	0	0	0	0	0	0	0	0
	:	:	:	:	:	:	:	:	:	:	:	:	:	:	:	:	:	:	:	:	:	:	:	:	:
	Red(253)	1	1	1	1	1	1	0	1	0	0	0	0	0	0	0	0	0	0	0	0	0	0	0	0
	Red(254)	1	1	1	1	1	1	1	0	0	0	0	0	0	0	0	0	0	0	0	0	0	0	0	0
	Red(255) Bright	1	1	1	1	1	1	1	1	0	0	0	0	0	0	0	0	0	0	0	0	0	0	0	0
Green	Green(000)Dark	0	0	0	0	0	0	0	0	0	0	0	0	0	0	0	0	0	0	0	0	0	0	0	0
	Green(001)	0	0	0	0	0	0	0	0	0	0	0	0	0	0	0	1	0	0	0	0	0	0	0	0
	Green(002)	0	0	0	0	0	0	0	0	0	0	0	0	0	0	1	0	0	0	0	0	0	0	0	0
	:	:	:	:	:	:	:	:	:	:	:	:	:	:	:	:	:	:	:	:	:	:	:	:	:
	Green(253)	0	0	0	0	0	0	0	0	1	1	1	1	1	1	0	1	0	0	0	0	0	0	0	0
	Green(254)	0	0	0	0	0	0	0	0	1	1	1	1	1	1	1	0	0	0	0	0	0	0	0	0
	Green(255)Bright	0	0	0	0	0	0	0	0	1	1	1	1	1	1	1	1	0	0	0	0	0	0	0	0
Blue	Blue(000) Dark	0	0	0	0	0	0	0	0	0	0	0	0	0	0	0	0	0	0	0	0	0	0	0	0
	Blue(001)	0	0	0	0	0	0	0	0	0	0	0	0	0	0	0	0	0	0	0	0	0	0	0	1
	Blue(002)	0	0	0	0	0	0	0	0	0	0	0	0	0	0	0	0	0	0	0	0	0	0	1	0
	:	:	:	:	:	:	:	:	:	:	:	:	:	:	:	:	:	:	:	:	:	:	:	:	:
	Blue(253)	0	0	0	0	0	0	0	0	0	0	0	0	0	0	0	0	1	1	1	1	1	1	0	1
	Blue(254)	0	0	0	0	0	0	0	0	0	0	0	0	0	0	0	0	1	1	1	1	1	1	1	0
	Blue(255) Bright	0	0	0	0	0	0	0	0	0	0	0	0	0	0	0	0	1	1	1	1	1	1	1	1

3-6. Power Sequence

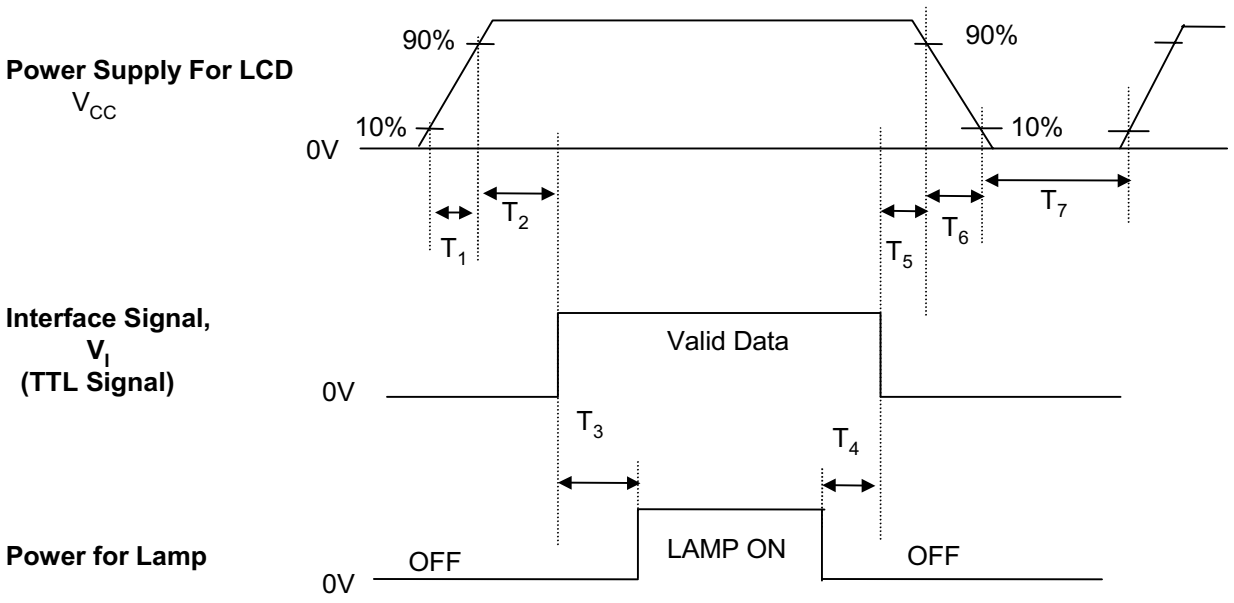

[figure 7] Power Sequence

Table 8. POWER SEQUENCE TIME DELAY

Parameter	Values			Units
	Min.	Typ.	Max.	
T_1	-	-	10	ms
T_2	0	-	50	ms
T_3	200	-	-	ms
T_4	200	-	-	ms
T_5	0	-	50	ms
T_6	-	-	10	ms
T_7	500	-	-	ms

Notes : 1. Please avoid floating state of interface signal at invalid period.
2. When the interface signal is invalid, be sure to pull down the power supply for LCD V_{CC} to 0V.
3. Lamp power must be turn on after power supply for LCD and interface signal are valid.

3-7. V_{CC} Power Dip Condition

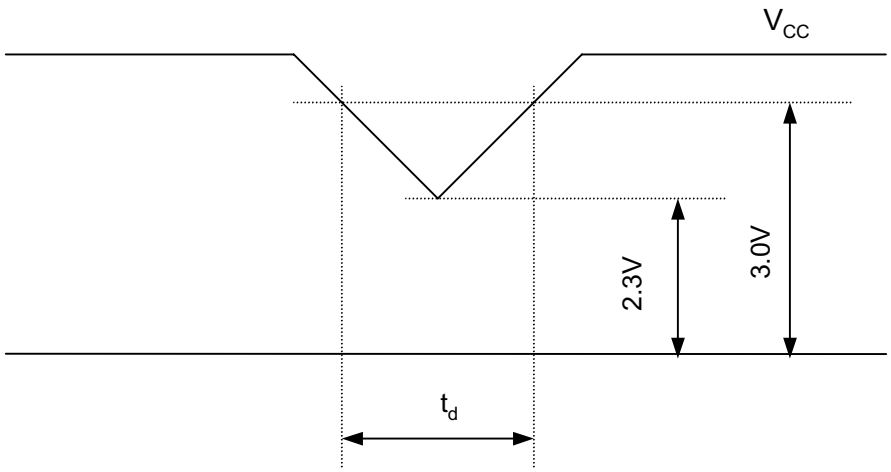

[figure 8] Power Dip condition

1) Dip condition

$2.3V \leq V_{CC} < 3.0V$, $t_d \leq 20ms$

2) $V_{CC} < 2.3V$

V_{CC}-dip conditions should also follow the Power On/Off conditions for supply voltage.

4. Optical Specification

Optical characteristics are determined after the unit has been 'ON' and stable for approximately 30 minutes in a dark environment at 25 °C. The values specified are at an approximate distance 50cm from the LCD surface at a viewing angle of Φ and θ equal to 0 °.
[Figure 9] presents additional information concerning the measurement equipment and method.

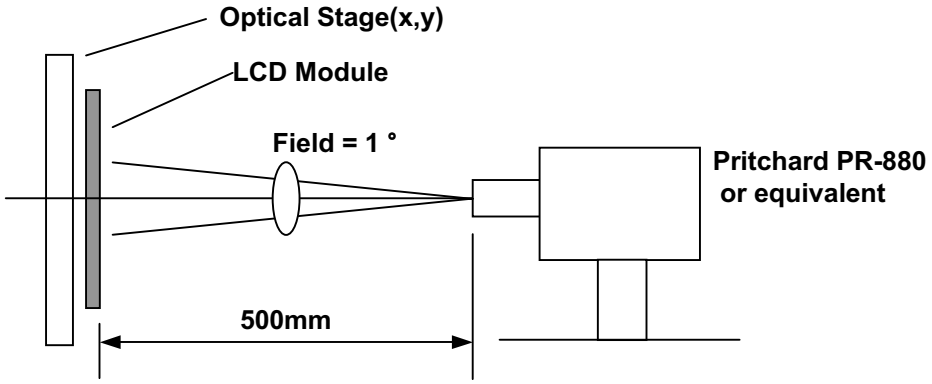

[Figure 9] Optical Characteristic Measurement Equipment and Method

(Ta=25 °C, V_{CC}=3.3V, f_V=60Hz Dclk=65MHz, I_{BL}=8mA)

Table 9. OPTICAL CHARACTERISTICS

Parameter	Symbol	Values			Units	Notes
		Min.	Typ.	Max.		
Contrast Ratio	CR	200	300	-		1
Surface Luminance, white	L_{WH}	170	200	-	cd/m^2	2
Luminance Variation	δ_{WHITE}	-	-	1.3		3
Response Time	Tr		30	50	ms	4
Rise Time	Tr_R	-	10	15		
Decay Time	Tr_D	-	20	35		
CIE Color Coordinates						
Red	XR	0.596	0.626	0.656		
	YR	0.317	0.347	0.377		
Green	XG	0.278	0.308	0.338		
	YG	0.558	0.588	0.618		
Blue	XB	0.116	0.146	0.176		
	YB	0.089	0.119	0.149		
White	XW	0.283	0.313	0.343		
	YW	0.299	0.329	0.359		
Viewing Angle						
x axis, right(ϕ=0°)	θr	55	60	-	degree	5
x axis, left (ϕ=180°)	θl	55	60	-		
y axis, up (ϕ=90°)	θu	40	45	-		
y axis, down (ϕ=270°)	θd	40	45	-		
Gray Scale		-	2.2	-		6
Flicker		-	-	-20	dB	7

Notes : 1. Contrast Ratio(CR) is defined mathematically as :

$$\text{Contrast Ratio} = \frac{\text{Surface Luminance with all white pixels}}{\text{Surface Luminance with all black pixels}}$$

2. Surface luminance is the center point across the LCD surface 50cm from the surface with all pixels displaying white. For more information see [Figure 10].
When I_{BL}=8mA, L_{WH}=170cd/m^2(Min.) 200cd/m^2(Typ.)

3. The variation in surface luminance , δ WHITE is determined by measuring L_{ON} at each test position 1 through 5, and then dividing the maximum L_{ON} of 5 points luminance by minimum L_{ON} of 5 points luminance. For more information see [Figure 10].
δ WHITE = Maximum(L_{ON1},L_{ON2}, ….. L_{ON5}) ÷ Minimum(L_{ON1},L_{ON2}, ….. L_{ON5})

4. Response time is the time required for the display to transition from to black(Rise Time, Tr_R) and from black to white(Decay Time, Tr_D). For additional information see [Figure 11].

5. Viewing angle is the angle at which the contrast ratio is greater than 10. The angles are determined for the horizontal or x axis and the vertical or y axis with respect to the z axis which is normal to the LCD surface. For more information see [Figure 12].
6. Gray scale specification

Table 10. GRAY SCALE

Gray Level	Luminance(%) (Typ.)
L000	0.22
L031	0.81
L063	4.29
L095	11.4
L127	22.1
L159	36.4
L191	55.4
L223	78.0
L255	100

7. Flicker is measured at cyan dot pattern of Forground RGB(0,0,0) and Background RGB(0,127,127).

[Figure 10] Luminance measuring point

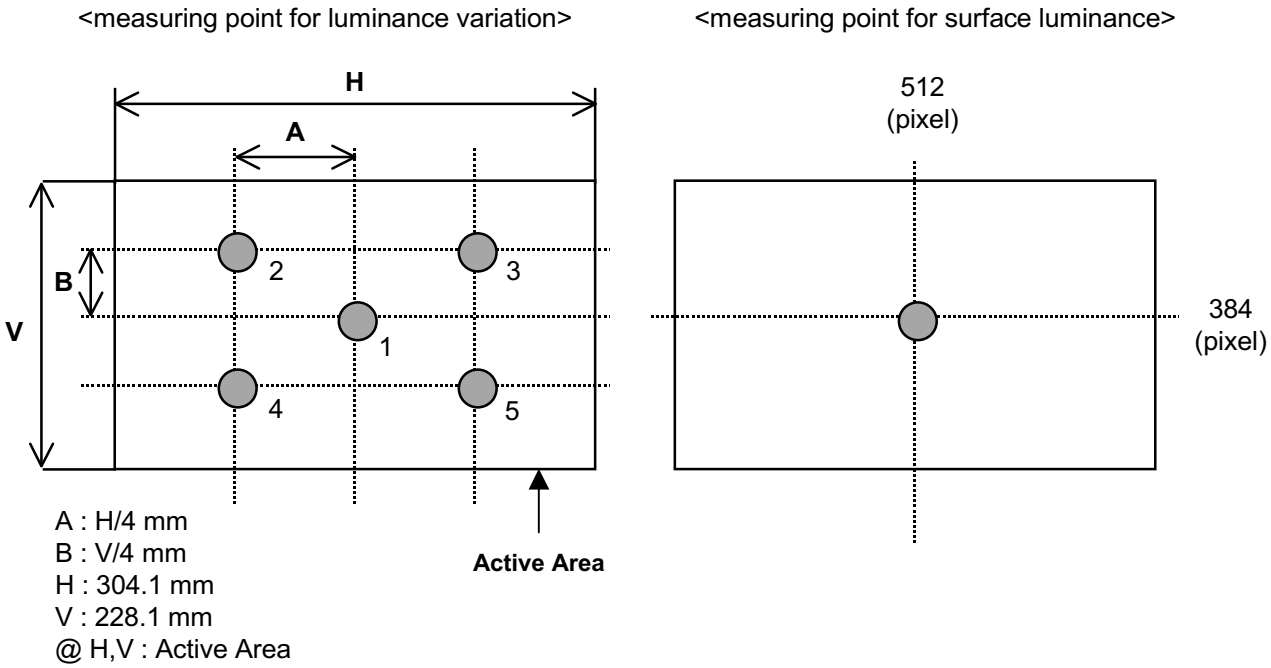

A : H/4 mm
B : V/4 mm
H : 304.1 mm
V : 228.1 mm
@ H,V : Active Area

[Figure 11] Response Time

The response time is defined as the following figure and shall be measured by switching the input signal for “black” and “white”.

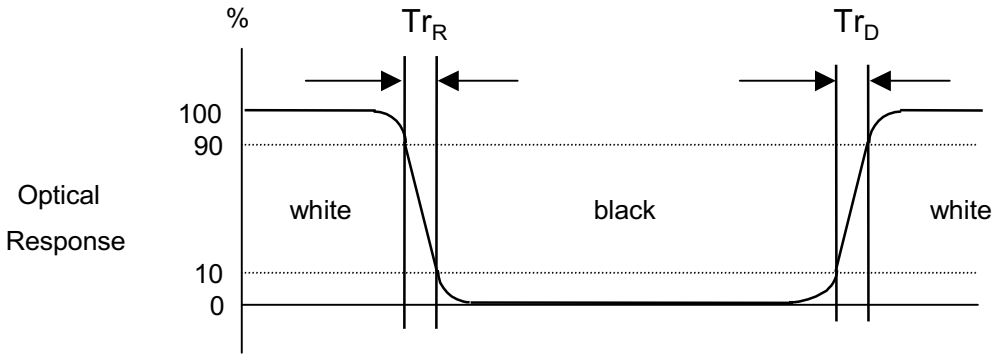

[Figure 12] Viewing angle

<dimension of viewing angle range>

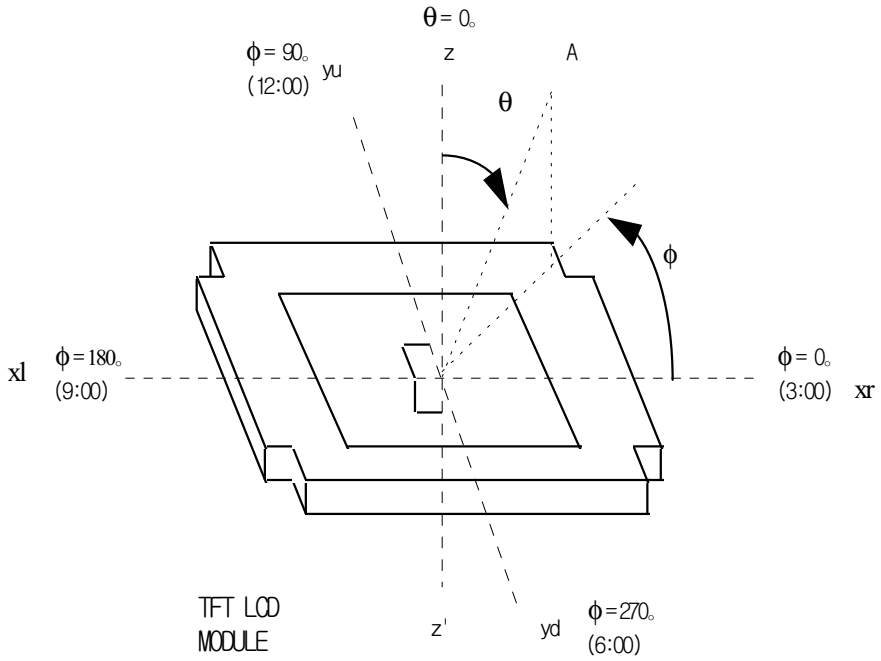

5. Mechanical Characteristics

The contents provide general mechanical characteristics for the model LM150X05-C3. In addition, the figures in the next page are detailed mechanical drawing of the LCD.

Table 11. MECHANICAL CHARACTERISTICS

Outside dimensions	Horizontal	331.3 ± 0.5 m
	Vertical	257.9 ± 0.5 mm
	Depth	11.0 ± 0.5 mm
Bezel area	Horizontal	308.2 ± 0.5 mm
	Vertical	232.2 ± 0.5 mm
Active display area	Horizontal	304.128 mm
	Vertical	228.096 mm
Weight	1030g(Typ.)	
Surface Treatment	Hard coating 3H. Anti-glare, LR coating treatment of the front polarizer.	

[Figure 13] LM150X05 Front View

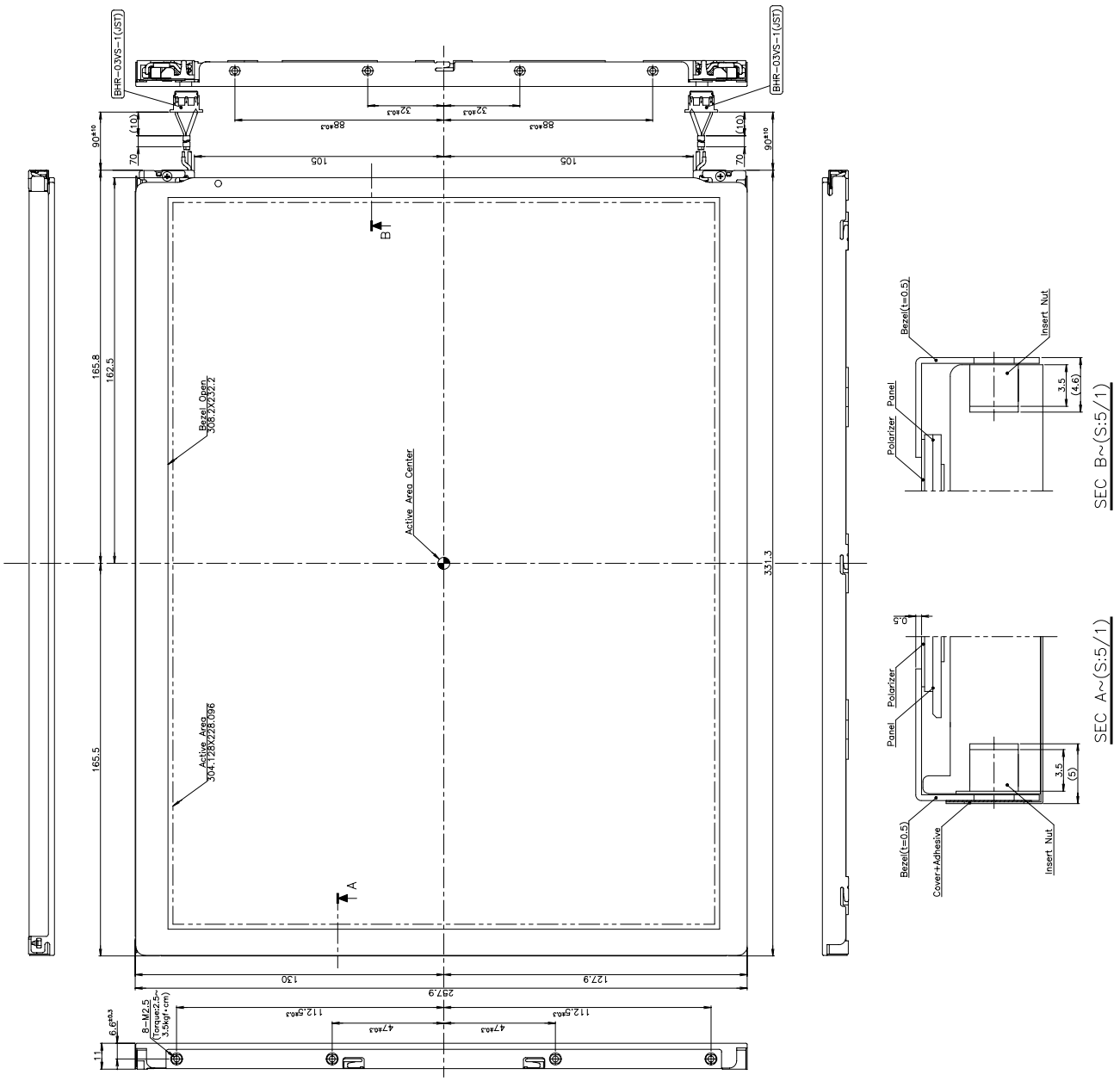

[Figure 14] LM150X05 Rear View

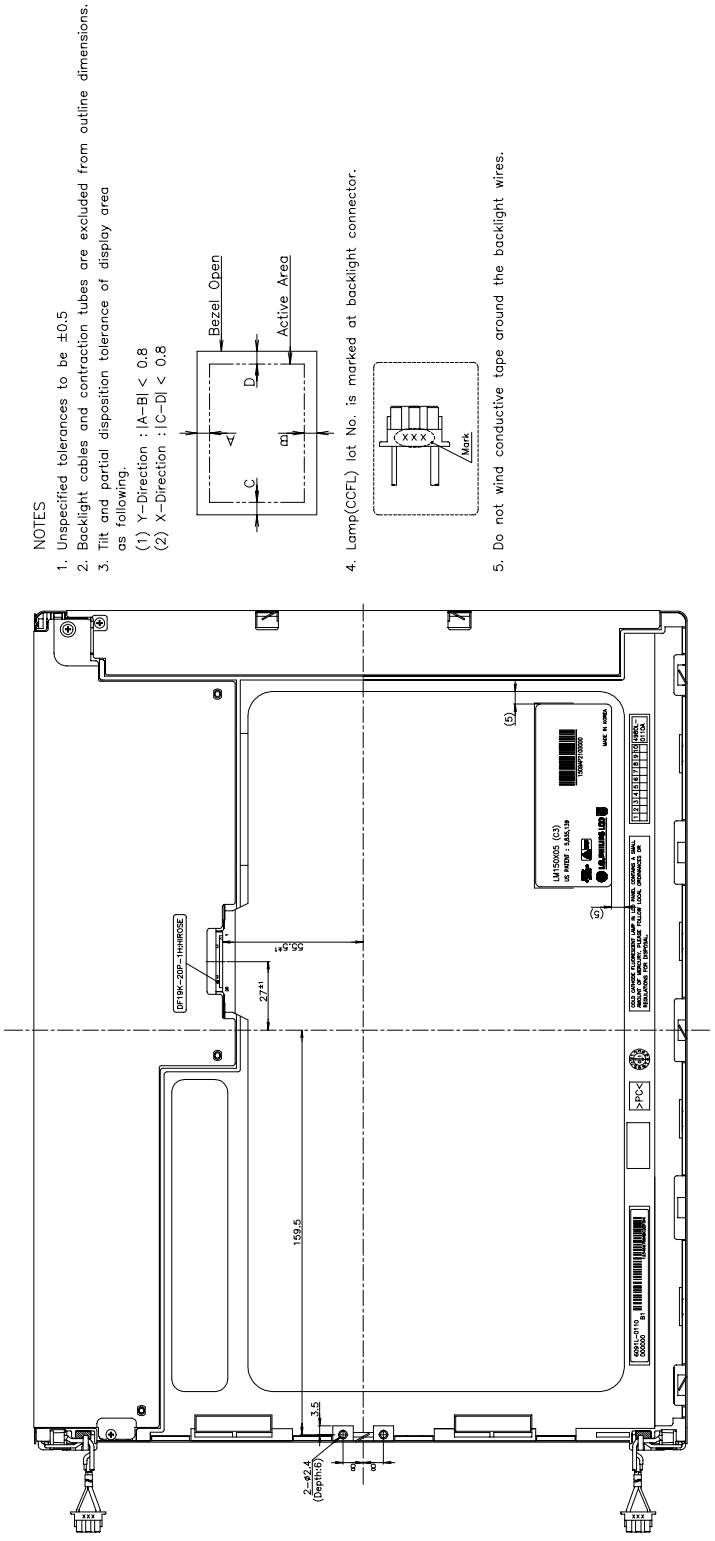

6. Reliability

Table 12. ENVIRONMENT TEST CONDITION

No.	Test Item	Conditions
1	High temperature storage test	Ta= 60˚C 240h
2	Low temperature storage test	Ta= -20˚C 240h
3	High temperature operation test	Ta= 50˚C 50%RH 240h
4	Low temperature operation test	Ta= 0˚C 240h
5	Humidity Condition operation	10%RH ~ 90%RH
6	Humidity Condition storage	10%RH ~ 90%RH
7	Vibration test (non-operating)	Wave form : random Vibration level : 1.0G RMS Bandwidth : 10-500Hz Duration : X,Y,Z, 20 min One time each direction
8	Shock test (non-operating)	Shock level : 120G Waveform : half sine wave, 2ms Direction : ±X, ±Y, ±Z One time each direction
9	Altitude storage / shipment	0 - 40,000 feet(12,192m)

{ Result Evaluation Criteria }
There should be no change which might affect the practical display function when the display quality test is conducted under normal operating condition.

7. International Standards

7-1. Safety

a) UL 1950 Third Edition, Underwriters Laboratories, Inc. Jan. 28, 1995.
Standard for Safety of Information Technology Equipment Including Electrical Business Equipment.
b) CAN/CSA C22.2 No. 950-95 Third Edition, Canadian Standards Association, Jan. 28, 1995.
Standard for Safety of Information Technology Equipment Including Electrical Business Equipment.
c) EN 60950 : 1992+A1: 1993+A2: 1993+A3: 1995+A4: 1997+A11: 1997
IEC 950 : 1991+A1: 1992+A2: 1993+A3: 1995+A4: 1996
European Committee for Electrotechnical Standardization(CENELEC)
EUROPEAN STANDARD for Safety of Information Technology Equipment Including Electrical Business Equipment.

7-2. EMC

a) ANSI C63.4 “Methods of Measurement of Radio-Noise Emissions from Low-Voltage Electrical and Electrical Equipment in the Range of 9kHZ to 40GHz. “American National Standards Institute(ANSI), 1992
b) C.I.S.P.R “Limits and Methods of Measurement of Radio Interface Characteristics of Information Technology Equipment.“ International Special Committee on Radio Interference
c) EN 55022 “Limits and Methods of Measurement of Radio Interface Characteristics of Information Technology Equipment.“ European Committee for Electrotechnical Standardization (CENELEC), 1998

8. Packing

8-1. Designation of Lot Mark

a) Lot Mark

A	B	C	D	E	F	G	H	I	J	K	L	M

A,B,C : SIZE
D : YEAR
E : MONTH
F,G : PANEL CODE
H : ASSEMBLY CODE
I,J,K,L,M : SERIAL NO.

Note:

1. YEAR

YEAR	97	98	99	2000	2001	2002	2003	2004	2005	2006	2007
Mark	7	8	9	0	1	2	3	4	5	6	7

2. MONTH

MONTH	Jan.	Feb.	Mar.	Apr.	May.	Jun.	Jul.	Aug.	Sep.	Oct.	Nov.	Dec.
Mark	1	2	3	4	5	6	7	8	9	A	B	C

3. Serial No.

Serial No.	1 ~ 99999	100000 ~
Mark	00001 ~ 99999	A0001 ~ A9999,·····, Z9999

b) Location of Lot Mark

Serial NO. is printed on the label. The label is attached to the backside of the LCD module.
This is subject to change without prior notice.

8-2. Packing Form

a) Package quantity in one box : 8 pcs

b) Box Size : 344mm X 315mm X 410mm.

9. PRECAUTIONS

Please pay attention to the following when you use this TFT LCD module.

9-1. MOUNTING PRECAUTIONS

(1) You must mount a module using holes arranged in four corners or four sides.
(2) You should consider the mounting structure so that uneven force(ex. Twisted stress) is not applied to the module.
And the case on which a module is mounted should have sufficient strength so that external force is not transmitted directly to the module.
(3) Please attach a transparent protective plate to the surface in order to protect the polarizer.
Transparent protective plate should have sufficient strength in order to the resist external force.
(4) You should adopt radiation structure to satisfy the temperature specification.
(5) Acetic acid type and chlorine type materials for the cover case are not describe because the former generates corrosive gas of attacking the polarizer at high temperature and the latter causes circuit break by electro-chemical reaction.
(6) Do not touch, push or rub the exposed polarizers with glass, tweezers or anything harder than HB pencil lead. And please do not rub with dust clothes with chemical treatment.
Do not touch the surface of polarizer for bare hand or greasy cloth.(Some cosmetics are determined to the polarizer.)
(7) When the surface becomes dusty, please wipe gently with absorbent cotton or other soft materials like chamois soaks with petroleum benzene. Normal-hexane is recommended for cleaning the adhesives used to attach front / rear polarizers. Do not use acetone, toluene and alcohol because they cause chemical damage to the polarizer.
(8) Wipe off saliva or water drops as soon as possible. Their long time contact with polarizer causes deformations and color fading.
(9) Do not open the case because inside circuits do not have sufficient strength.

9-2. OPERATING PRECAUTIONS

(1) The spike noise causes the mis-operation of circuits. It should be lower than following voltage :
V=±200mV(Over and under shoot voltage)
(2) Response time depends on the temperature.(In lower temperature, it becomes longer.)
(3) Brightness depends on the temperature. (In lower temperature, it becomes lower.)
And in lower temperature, response time(required time that brightness is stable after turned on) becomes longer.
(4) Be careful for condensation at sudden temperature change. Condensation makes damage to polarizer or electrical contacted parts. And after fading condensation, smear or spot will occur.
(5) When fixed patterns are displayed for a long time, remnant image is likely to occur.
(6) Module has high frequency circuits. Sufficient suppression to the electromagnetic interference shall be done by system manufacturers. Grounding and shielding methods may be important to minimized the interference.

9-3. ELECTROSTATIC DISCHARGE CONTROL

Since a module is composed of electronic circuits, it is not strong to electrostatic discharge. Make certain that treatment persons are connected to ground through wrist band etc. And don't touch interface pin directly.

9-4. PRECAUTIONS FOR STRONG LIGHT EXPOSURE

Strong light exposure causes degradation of polarizer and color filter.

9-5. STORAGE

When storing modules as spares for a long time, the following precautions are necessary.

(1) Store them in a dark place. Do not expose the module to sunlight or fluorescent light. Keep the temperature between 5°C and 35°C at normal humidity.

(2) The polarizer surface should not come in contact with any other object.
It is recommended that they be stored in the container in which they were shipped.

9-6. HANDLING PRECAUTIONS FOR PROTECTION FILM

(1) The protection film is attached to the bezel with a small masking tape.
When the protection film is peeled off, static electricity is generated between the film and polarizer. This should be peeled off slowly and carefully by people who are electrically grounded and with well ion-blown equipment or in such a condition, etc.

(2) When the module with protection film attached is stored for a long time, sometimes there remains a very small amount of glue still on the Bezel after the protection film is peeled off.

(3) You can remove the glue easily. When the glue remains on the Bezel or its vestige is recognized, please wipe them off with absorbent cotton waste or other soft material like chamois soaked with normal-hexane.