Low Dropout CMOS Voltage Regulators

LM1114

Features

- Maximum output current 250mA
- Highly accurate : output voltage+/-2%
- Low power consumption : typ. 2 μ A
- Small input/output differential:
  0.4V at 160mA(Vout=2.5V, 3.0V, 3.3V, 3.6V)
  0.12V at 100mA(Vout=5V)

Applications

- Battery powered equipment
- Palmtops
- Portable cameras and video recorders
- Reference voltage sources

Product Description

The LM1114 series is a group of positive voltage output, three-pin regulators, that provide a high current even when the input/output voltage differential is small. Low power consumption and high accuracy is achieved through CMOS and programmable fuse technologies. Output voltage: 2V to 6V in 0.1V increments.
The LM1114 consists of a high-precision voltage reference, an error correction circuit, and a current limited output driver. Transient response to load variations is improved in comparison to the existing ones.

Absolute Maximum Ratings

Parameter		Symbol	Ratings	Units
Input Voltage		Vin	12	V
Output Current		Iout	500	mA
Output Voltage		Vout	Vss-0.3～Vin+0.3	V
Continuous Total Power Dissipation	TO-92	P_D	500	mW
	SOT-23		150	
	SOT-89		500	
Operating Ambient Temperature		Topr	-40～+85	℃
Storage Temperature		Tstg	-40～+125	℃

Pin Configuration

TO-92

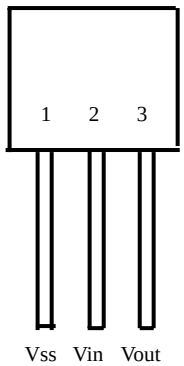

SOT-23

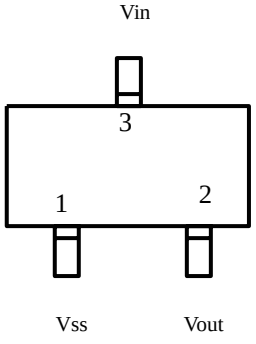

SOT-89

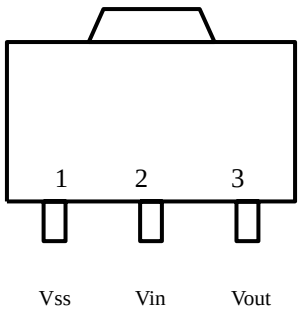

Block Diagram

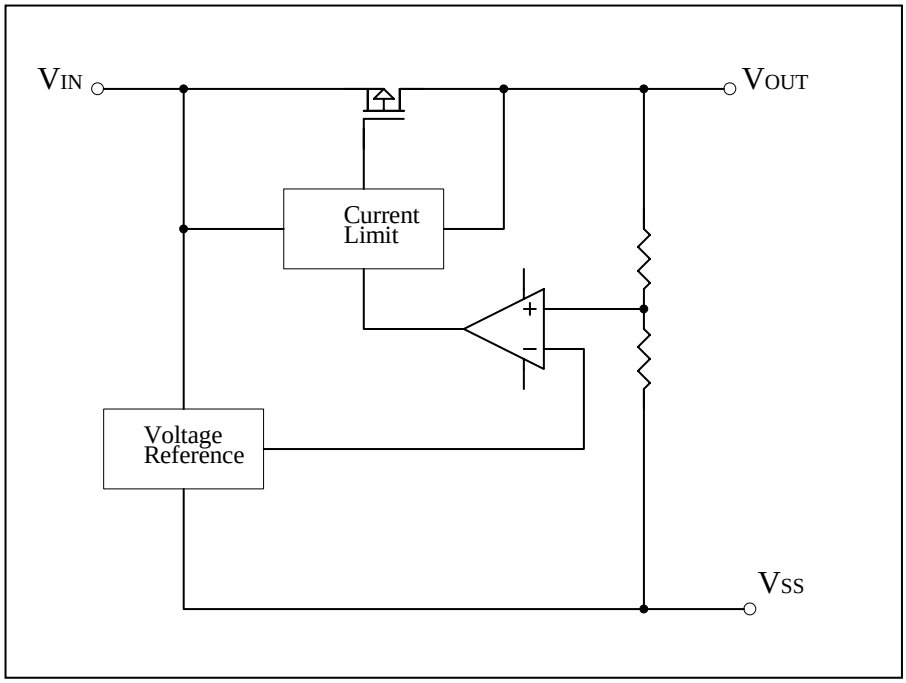

Typical Application Circuit

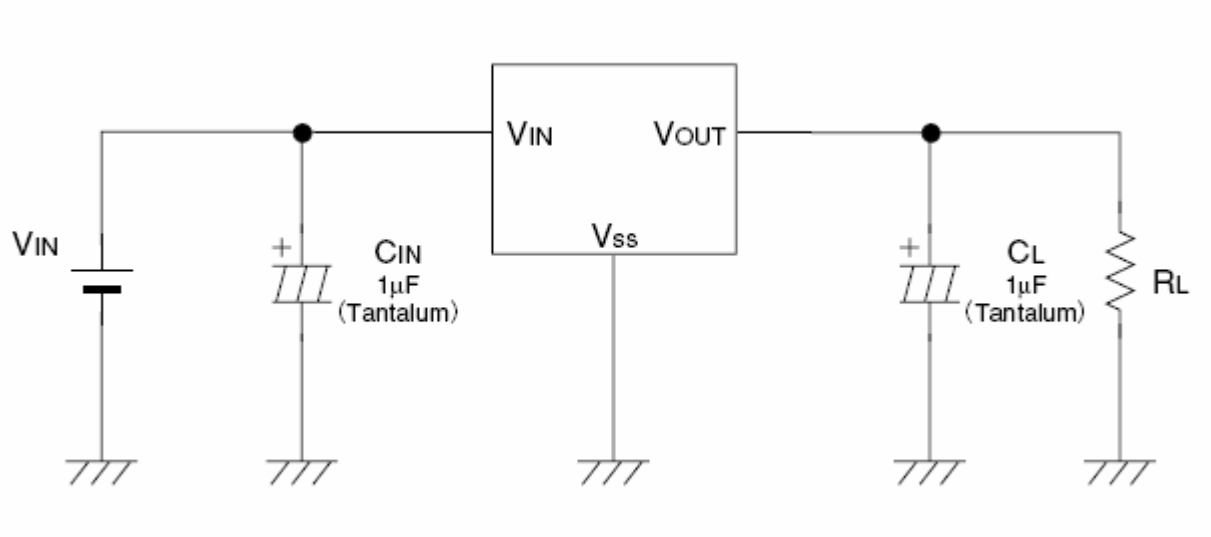

Ordering Information

Device	Output Voltage	Package	Shipping
LM1114-2.5 A3	2.5V	TO-92	Tape & Box / 2K
LM1114-2.5 N3	2.5V	SOT-23	Tape & Reel / 3K
LM1114-2.5 M3	2.5V	SOT-89	Tape & Reel / 1K
LM1114-3.0 A3	3.0V	TO-92	Tape & Box / 2K
LM1114-3.0 N3	3.0V	SOT-23	Tape & Reel / 3K
LM1114-3.0 M3	3.0V	SOT-89	Tape & Reel / 1K
LM1114-3.3 A3	3.3V	TO-92	Tape & Box / 2K
LM1114-3.3 N3	3.3V	SOT-23	Tape & Reel / 3K
LM1114-3.3 M3	3.3V	SOT-89	Tape & Reel / 1K
LM1114-3.6A3	3.6V	TO-92	Tape & Box / 2K
LM1114-3.6N3	3.6V	SOT-23	Tape & Reel / 3K
LM1114-3.6M3	3.6V	SOT-89	Tape & Reel / 1K
LM1114-5.0 A3	5.0V	TO-92	Tape & Box / 2K
LM1114-5.0 N3	5.0V	SOT-23	Tape & Reel / 3K
LM1114-5.0 M3	5.0V	SOT-89	Tape & Reel / 1K

Electrical Characteristics @V_{IN}=5V,Ta=25℃, C_{IN}=1μF(tantalum), C_{OUT}=1μF(tantalum), unless otherwise noted

LM1114-2.5

Parameter	Conditions	Min	Typ	Max	Units	Circuit
Output Voltage	Io=40mA,Vin=4V	2.450	2.500	2.550	V	1
Line Regulation △Vout/△VinVout	Io=40mA,4V<Vin<10V	-	0.2	0.3	%/V	1
Load Regulation	Vin=4V,1mA<Io<80mA	-	45	90	mV	1
Current Consumption	Vin=4V	-	2.0	4.5	μA	2
Dropout Voltage	Io=80mA	-	0.18	0.36	V	1
	Io=160mA	-	0.4	0.7	V	1

LM1114-3.0

Parameter	Conditions	Min	Typ	Max	Units	Circuit
Output Voltage	Io=40mA,Vin=4.0V	2.940	3.000	3.060	V	1
Line Regulation △Vout/△VinVout	Io=40mA,4.0V<Vin<10V	-	0.2	0.3	%/V	1
Load Regulation	Vin=6V,1mA<Io<80mA	-	45	90	mV	1
Current Consumption	Vin=4.0V	-	1.0	2.9	μA	2
Dropout Voltage	Io=80mA	-	0.18	0.36	V	1
	Io=160mA	-	0.4	0.7	V	1

LM1114-3.3

Parameter	Conditions	Min	Typ	Max	Units	Circuit
Output Voltage	Io=40mA,Vin=4.3V	3.234	3.300	3.366	V	1
Line Regulation △Vout/△VinVout	Io=40mA,4.3V<Vin<10V	-	0.2	0.3	%/V	1
Load Regulation	Vin=6V,1mA<Io<80mA	-	45	90	mV	1
Current Consumption	Vin=4.3V	-	1.0	2.9	μA	2
Dropout Voltage	Io=80mA	-	0.18	0.36	V	1
	Io=160mA	-	0.4	0.7	V	1

LM1114-3.6

Parameter	Conditions	Min	Typ	Max	Units	Circuit
Output Voltage	Io=40mA,Vin=4.6V	3.522	3.600	3.672	V	1
Line Regulation △Vout/△VinVout	Io=40mA,4.6V<Vin<10V	-	0.2	0.3	%/V	1
Load Regulation	Vin=6V,1mA<Io<80mA	-	45	90	mV	1
Current Consumption	Vin=4.6V	-	1.0	2.9	μA	2
Dropout Voltage	Io=80mA	-	0.18	0.36	V	1
	Io=160mA	-	0.4	0.7	V	1

LM1114-5.0

Parameter	Conditions	Min	Typ	Max	Units	Circuit
Output Voltage	Io=40mA,Vin=6.0V	4.900	5.000	5.100	V	1
Line Regulation △Vout/△VinVout	Io=40mA,6.0V<Vin<10V	-	0.2	0.3	%/V	1
Load Regulation	Vin=6V,1mA<Io<100mA	-	40	80	mV	1
Current Consumption	Vin=6.0V	-	2.0	4.5	μA	2
Dropout Voltage	Io=100mA	-	0.12	0.3	V	1
	Io=200mA	-	0.38	0.6	V	1

Test Circuits

Circuit 1

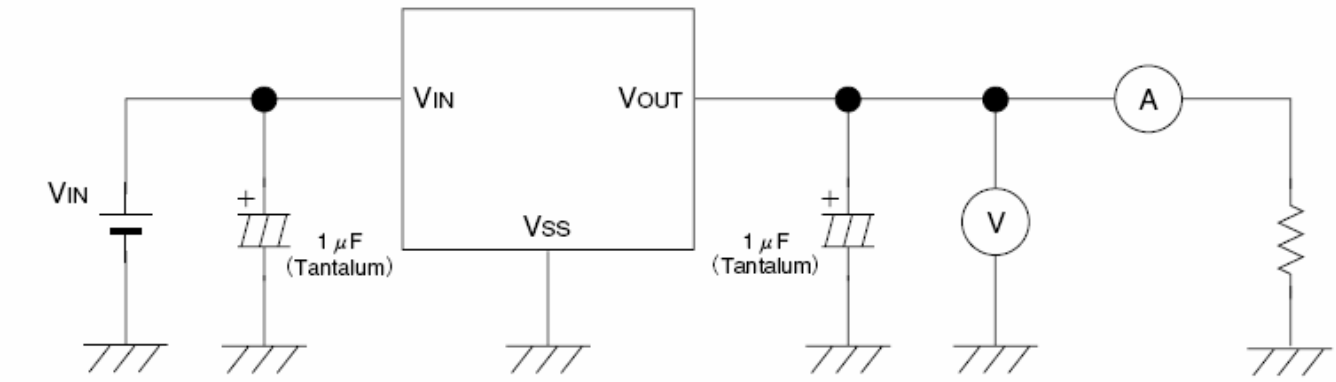

Circuit 2

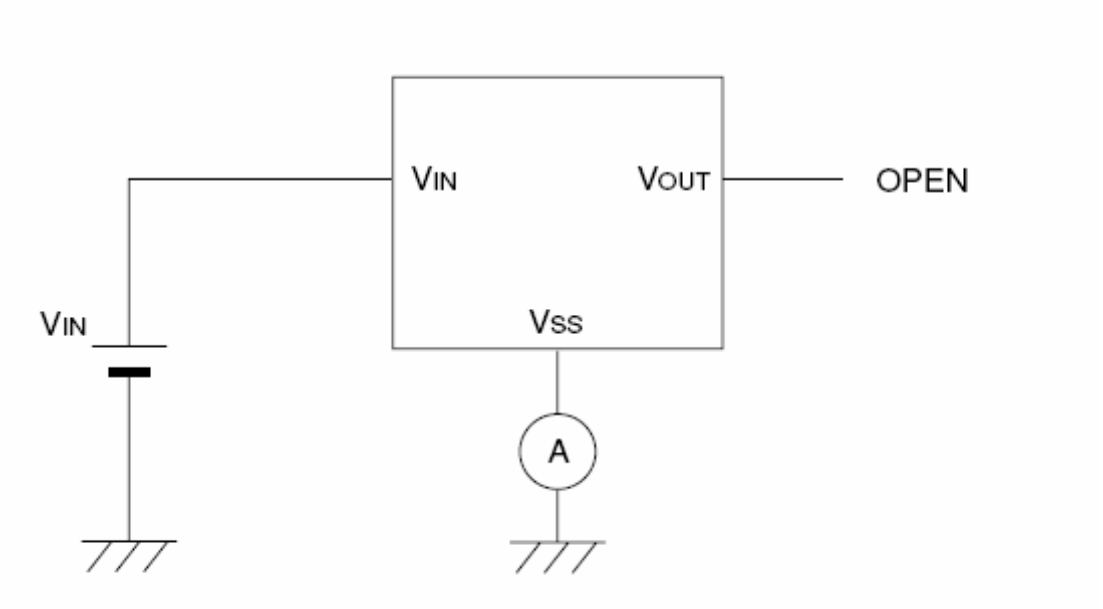

Characteristic Curves @C_{IN}=1μF(tantalum), C_{OUT}=1μF(tantalum)

LM1114-3.3

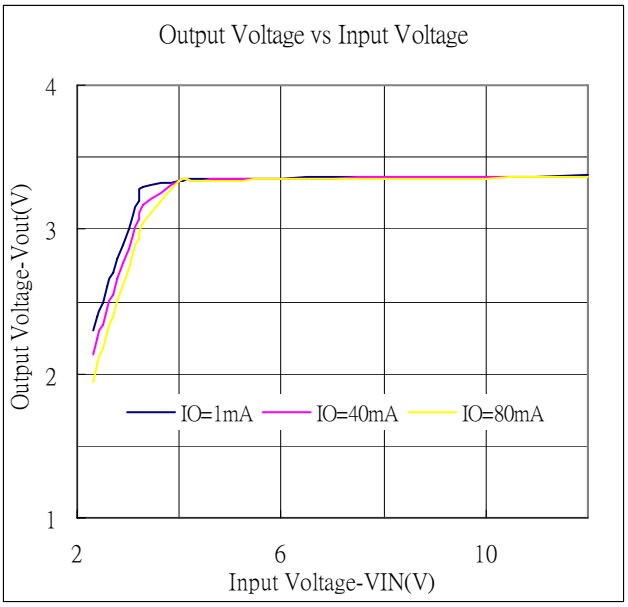

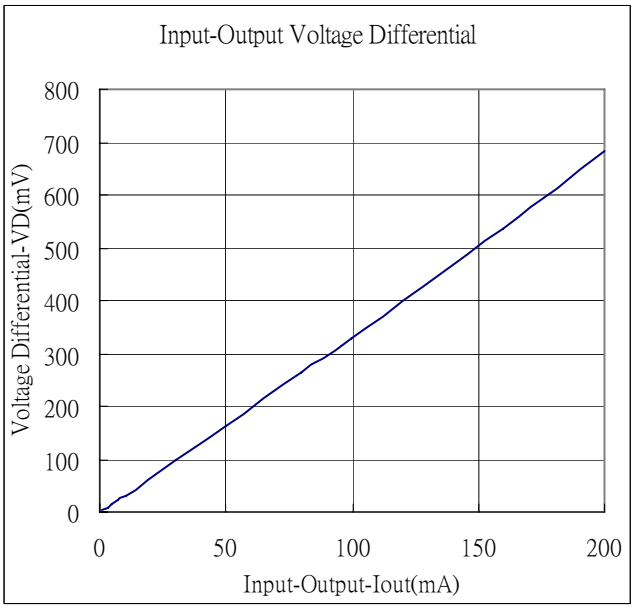

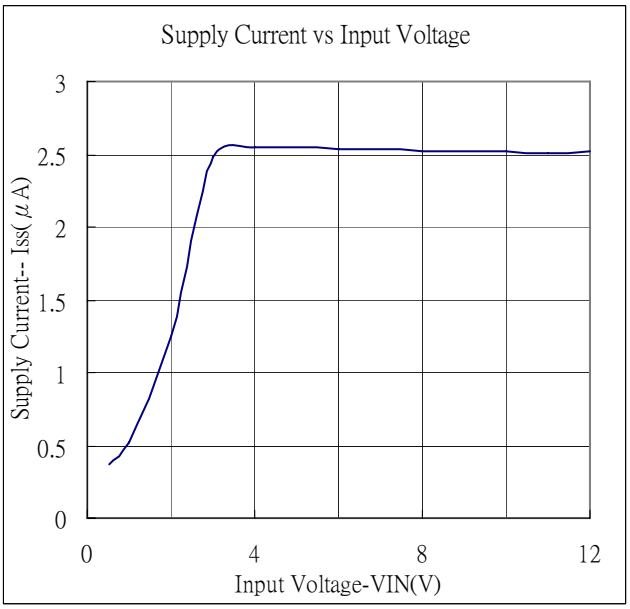

LM1114-5.0

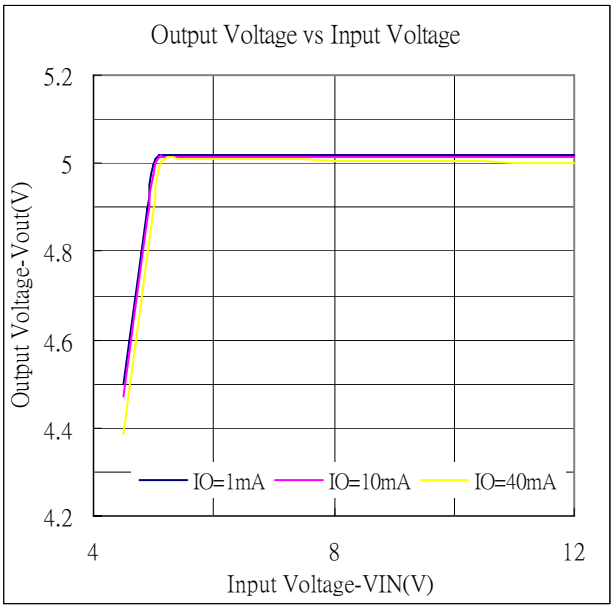
Output Voltage vs Input Voltage
Output Voltage-Vout(V)
5.2
5
4.8
4.6
4.4
4.2
IO=1mA
IO=10mA
IO=40mA
4
8
12
Input Voltage-VIN(V)

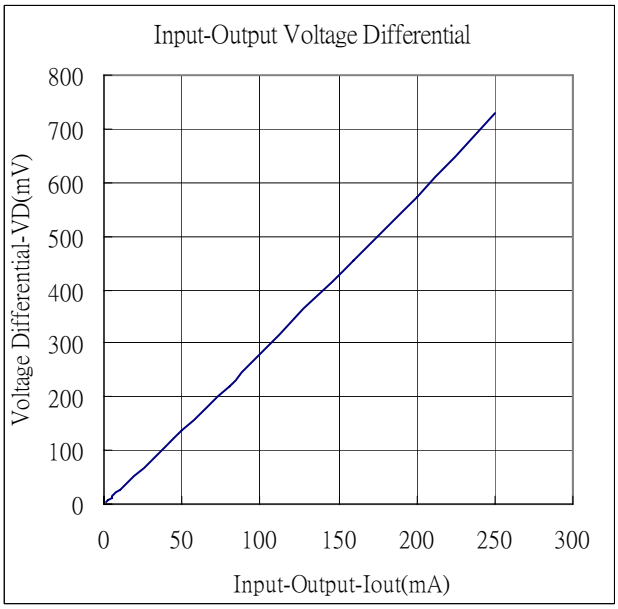
Input-Output Voltage Differential
Voltage Differential-VD(mV)
800
700
600
500
400
300
200
100
0
0
50
100
150
200
250
300
Input-Output-Iout(mA)

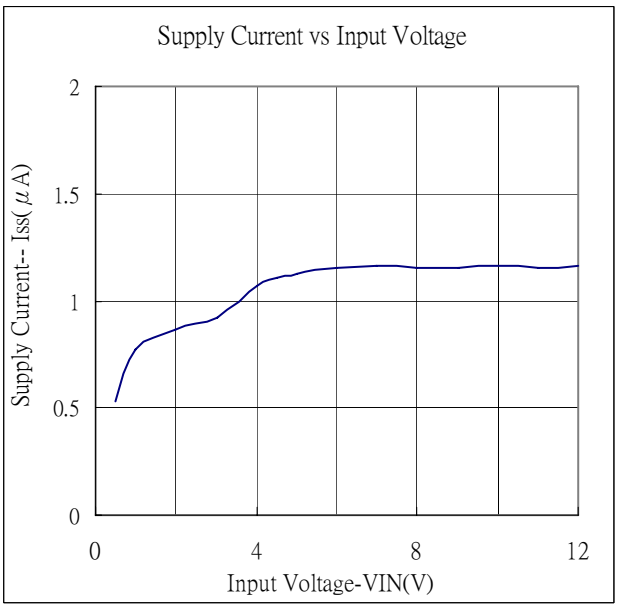
Supply Current vs Input Voltage
Supply Current-- Iss(μA)
2
1.5
1
0.5
0
0
4
8
12
Input Voltage-VIN(V)

TO-92 Dimension

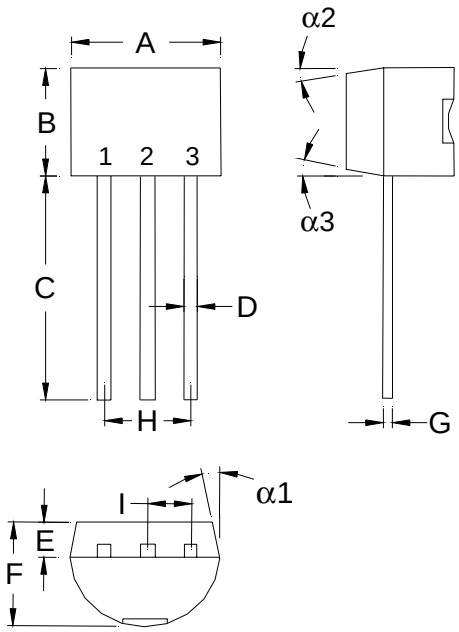

Marking:

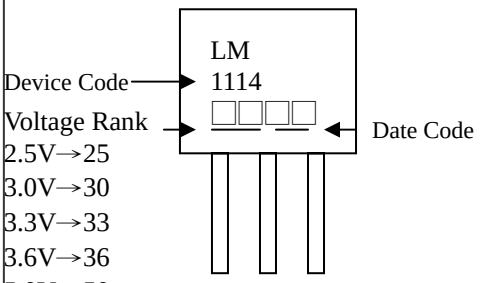

Style: Pin 1.Vss 2.Vin 3.Vout

3-Lead TO-92 Plastic Package
CYStek Package Code: A3

*: Typical

DIM	Inches		Millimeters		DIM	Inches		Millimeters	
	Min.	Max.	Min.	Max.		Min.	Max.	Min.	Max.
A	0.1704	0.1902	4.33	4.83	G	0.0142	0.0220	0.36	0.56
B	0.1704	0.1902	4.33	4.83	H	-	*0.1000	-	*2.54
C	0.5000	-	12.70	-	I	-	*0.0500	-	*1.27
D	0.0142	0.0220	0.36	0.56	α1	-	*5°	-	*5°
E	-	*0.0500	-	*1.27	α2	-	*2°	-	*2°
F	0.1323	0.1480	3.36	3.76	α3	-	*2°	-	*2°

Notes: 1.Dimension and tolerance based on our Spec. dated Apr. 18,2002.
2.Controlling dimension: millimeters.
3.Maximum lead thickness includes lead finish thickness, and minimum lead thickness is the minimum thickness of base material.
4.If there is any question with packing specification or packing method, please contact your local CYStek sales office.

Material:

- Lead: 42 Alloy ; solder plating
- Mold Compound: Epoxy resin family, flammability solid burning class: UL94V-0

SOT-23 Dimension

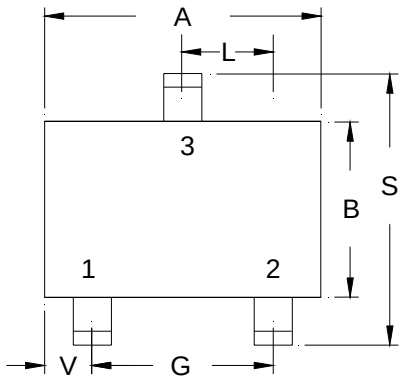

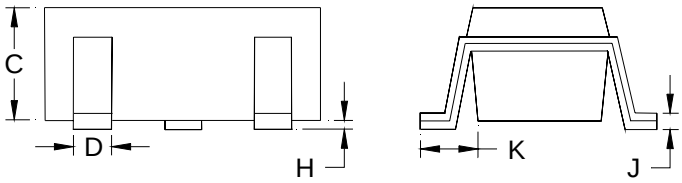

Marking:

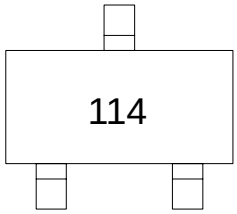

3-Lead SOT-23 Plastic
Surface Mounted Package
CYStek Package Code: N3

Style: Pin 1. Vss 2.Vout 3.Vin

*: Typical

DIM	Inches		Millimeters		DIM	Inches		Millimeters	
	Min.	Max.	Min.	Max.		Min.	Max.	Min.	Max.
A	0.1102	0.1204	2.80	3.04	J	0.0034	0.0070	0.085	0.177
B	0.0472	0.0630	1.20	1.60	K	0.0128	0.0266	0.32	0.67
C	0.0335	0.0512	0.89	1.30	L	0.0335	0.0453	0.85	1.15
D	0.0118	0.0197	0.30	0.50	S	0.0830	0.1083	2.10	2.75
G	0.0669	0.0910	1.70	2.30	V	0.0098	0.0256	0.25	0.65
H	0.0005	0.0040	0.013	0.10					

Notes: 1.Dimension and tolerance based on our Spec. dated Feb. 18,2002.
2.Controlling dimension: millimeters.
3.Maximum lead thickness includes lead finish thickness, and minimum lead thickness is the minimum thickness of base material.
4.If there is any question with packing specification or packing method, please contact your local CYCtek sales office.

Material:

- Lead: 42 Alloy; solder plating
- Mold Compound: Epoxy resin family, flammability solid burning class: UL94V-0

SOT-89 Dimension

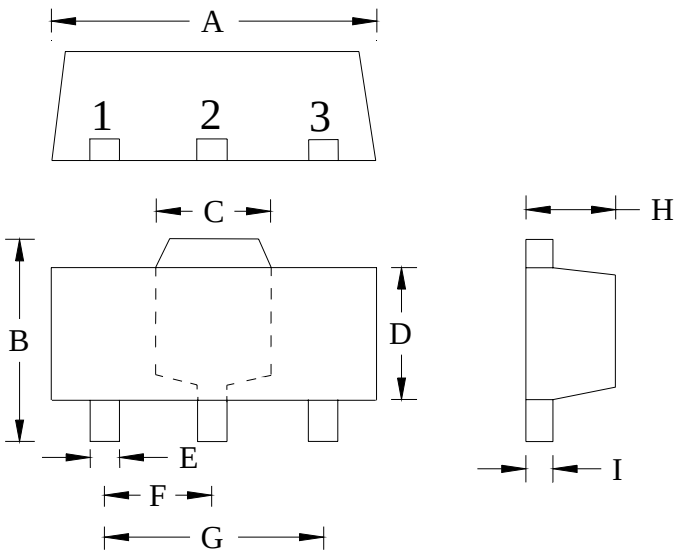

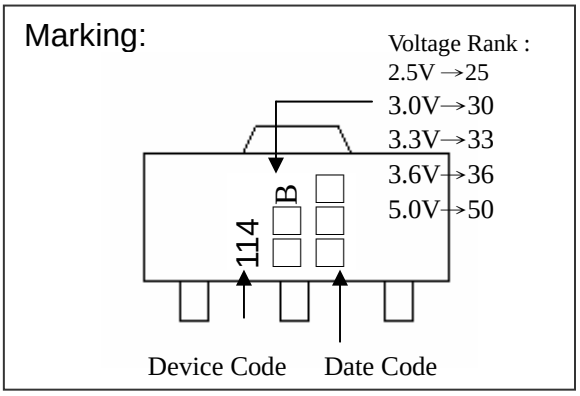

Style: Pin 1. Vss 2. Vin 3. Vout

3-Lead SOT-89 Plastic
Surface Mounted Package
CYStek Package Code: M3

*: Typical

DIM	Inches		Millimeters		DIM	Inches		Millimeters	
	Min.	Max.	Min.	Max.		Min.	Max.	Min.	Max.
A	0.1732	0.1811	4.40	4.60	F	0.0583	0.0598	1.48	1.527
B	0.1594	0.1673	4.05	4.25	G	0.1165	0.1197	2.96	3.04
C	0.0591	0.0663	1.50	1.70	H	0.0551	0.0630	1.40	1.60
D	0.0945	0.1024	2.40	2.60	I	0.0138	0.0161	0.35	0.41
E	0.01417	0.0201	0.36	0.51					

Notes: 1.Controlling dimension: millimeters.
2.Maximum lead thickness includes lead finish thickness, and minimum lead thickness is the minimum thickness of base material.
3.If there is any question with packing specification or packing method, please contact your local CYStek sales office.

Material:

- Lead: 42 Alloy ; solder plating
- Mold Compound: Epoxy resin family, flammability solid burning class: UL94V-0

Important Notice:

- All rights are reserved. Reproduction in whole or in part is prohibited without the prior written approval of CYStek.
- CYStek reserves the right to make changes to its products without notice.
- CYStek ***semiconductor products are not warranted to be suitable for use in Life-Support Applications, or systems.***
- CYStek assumes no liability for any consequence of customer product design, infringement of patents, or application assistance.