LM10506 Triple Buck + LDO Power Management Unit

1 Features

- Three Highly Efficient Programmable Buck Regulators
  - Buck Regulator Outputs:
    - Buck 1: 1.1 V to 3.6 V; 1.3 A
    - Buck 2: 1.1 V to 3.6 V; 400 mA
    - Buck 3: 0.7 V to 1.335 V; 600 mA
  - ±3% Feedback Voltage Accuracy
  - Up to 95% Efficient Buck Regulators
  - 2MHz Switching Frequency for Smaller Inductor Size
  - Integrated FETs with Low R_{DSON}
  - Bucks Operate With Their Phases Shifted to Reduce the Input Current Ripple and Capacitor Size
  - Programmable Output Voltage via the SPI™ Interface
  - Overvoltage and Undervoltage Lockout
  - Automatic Internal Soft Start With Power-On Reset
  - Current Overload and Thermal Shutdown Protection
  - Bypass Mode Available on Bucks 1 and 2
  - PFM Mode for Low-Load, High-Efficiency Operation
- Low-Dropout LDO 3.2 V, 100 mA
- SPI-Programmable Interrupt Comparator (2 V to 4 V)
- Alternate Buck V_{OUT} Selectable via H/L Logic Pins
- RESET, STANDBY Pins

2 Applications

Solid-State Drives

3 Description

The LM10506 is an advanced PMU containing three configurable, high-efficiency buck regulators for supplying variable voltages. The device is ideal for supporting ASIC and SOC designs for Solid-State and Flash drives.

The LM10506 operates cooperatively with ASIC to optimize the supply voltage for low-power conditions and Power Saving modes via the SPI interface. It also supports a 100-mA LDO and a programmable Interrupt Comparator.

Device Information(1)

PART NUMBER	PACKAGE	BODY SIZE (MAX)
LM10506	DSBGA (34)	2.84 mm x 2.84 mm

(1) For all available packages, see the orderable addendum at the end of the datasheet.

Simplified Schematic

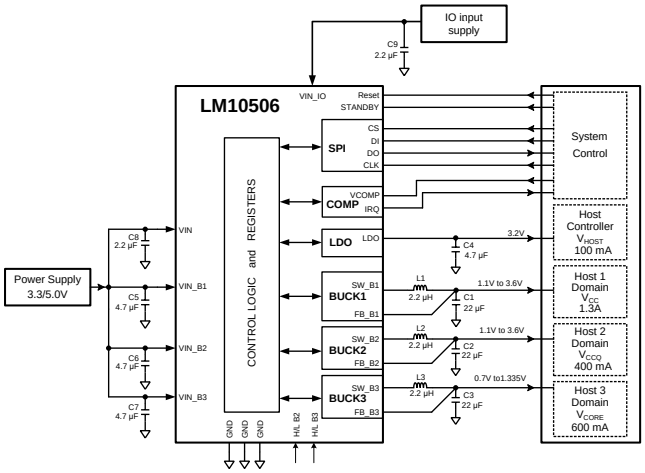

An IMPORTANT NOTICE at the end of this data sheet addresses availability, warranty, changes, use in safety-critical applications, intellectual property matters and other important disclaimers. PRODUCTION DATA.

Table of Contents

1 Features ... 1
2 Applications ... 1
3 Description ... 1
4 Revision History ... 2
5 Device Comparison Table ... 3
6 Pin Configuration and Functions ... 3
7 Specifications ... 5
7.1 Absolute Maximum Ratings ... 5
7.2 Handling Ratings ... 5
7.3 Recommended Operating Conditions ... 5
7.4 Thermal Information ... 5
7.5 General Electrical Characteristics ... 6
7.6 Buck 1 Electrical Characteristics ... 7
7.7 Buck 2 Electrical Characteristics ... 7
7.8 Buck 3 Electrical Characteristics ... 8
7.9 LDO Electrical Characteristics ... 9
7.10 Comparators Electrical Characteristics ... 9
7.11 Typical Characteristics ... 10
8 Detailed Description ... 13
8.1 Functional Block Diagram ... 13
8.2 Feature Description ... 13
8.3 Device Functional Modes ... 18
8.4 Programming ... 22
9 Application and Implementation ... 28
9.1 Application Information ... 28
9.2 Typical Application ... 28
10 Power Supply Recommendations ... 35
11 Layout ... 35
11.1 Layout Guidelines ... 35
11.2 Layout Example ... 36
12 Device and Documentation Support ... 37
12.1 Device Support ... 37
12.2 Trademarks ... 37
12.3 Electrostatic Discharge Caution ... 37
12.4 Glossary ... 37
13 Mechanical, Packaging, and Orderable Information ... 37

4 Revision History

NOTE: Page numbers for previous revisions may differ from page numbers in the current version.

Changes from Revision E (March 2013) to Revision F	Page
• Changed format to meet new TI standards; added Device Information and Handling Ratings tables; replace SUPPLY SPECIFICATION table with Device Comparison table, rename Functional Description and Applications sections, reformat and add new information, add Devices and Documentation section	1

Copyright © 2011–2014, Texas Instruments Incorporated

5 Device Comparison Table

Table 1. Available Device Options

PART NUMBER	BUCK 2 V_{OUT}	SOFT-START IN BYPASS	BUCK 2 BYPASS
LM10506TME	3.0 V	NO	YES
LM10506TME-A	2.0 V	NO	YES

6 Pin Configuration and Functions

DSBGA
34
Top View

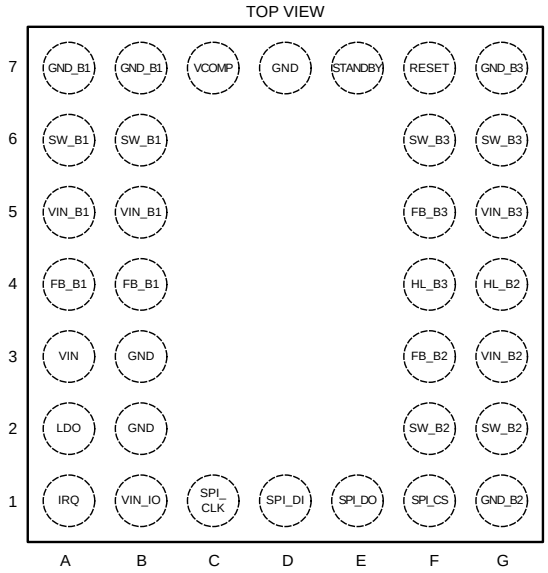

Pin Functions

PIN		I/O(1)	TYPE(1)	DESCRIPTION
NUMBER	NAME			
A/B5	VIN_B1	I	P	Buck Switcher Regulator 1 - Power supply voltage input for power stage PFET.
A/B6	SW_B1	I/O	P	Buck Switcher Regulator 1 - Power Switching node, connect to inductor
A/B4	FB_B1	I/O	A	Buck Switcher Regulator 1 - Voltage output feedback plus Bypass Power
A/B7	GND_B1	G	P	Buck Switcher Regulator 1 - Power ground for Buck Regulator
G3	VIN_B2	I	P	Buck Switcher Regulator 2 - Power supply voltage input for power stage PFET.
F/G2	SW_B2	I/O	P	Buck Switcher Regulator 2 - Power Switching node, connect to inductor
F3	FB_B2	I	A	Buck Switcher Regulator 2 - Voltage output feedback
G1	GND_B2	G	P	Buck Switcher Regulator 2 - Power ground for Buck Regulator
G5	VIN_B3	I	P	Buck Switcher Regulator 3 - Power supply voltage input for power stage PFET.
F/G6	SW_B3	I/O	P	Buck Switcher Regulator 3 - Power Switching node, connect to inductor
F5	FB_B3	I	A	Buck Switcher Regulator 3 - Voltage output feedback
G7	GND_B3	G	P	Buck Switcher Regulator 3 - Power ground for Buck Regulator
A3	VIN	I	P	Power supply Input Voltage, must be present for device to work
A2	LDO	O	P	LDO Regulator - LDO regulator output voltage
G4	HL_B2	I	D	Digital Input Startup Control Signal to change predefined output Voltage of Buck 2, internally pulled down as a default
F4	HL_B3	I	D	Digital Input Startup Control Signal to change predefined output Voltage of Buck 3, internally pulled up as a default
E7	STANDBY	I	D	Digital Input Control Signal for entering Standby Mode. This is an active High pin with an internal pulldown resistor.
F7	RESET	I	D	Digital Input Control Signal to abort SPI transactions; resets the PMIC to default voltages. This is an active Low pin with an internal pullup.
C7	VCOMP	I	A	Analog Input for Comparator
A1	IRQ	O	D	Digital Output of Comparator to signal interrupt condition
F1	SPI_CS	I	D	SPI Interface - chip select
D1	SPI_DI	I	D	SPI Interface - serial data input
E1	SPI_DO	O	D	SPI Interface - serial data output
C1	SPI_CLK	I	D	SPI Interface - serial clock input
B1	VIN_IO	I	A	Supply Voltage for Digital Interface
B2	GND	G	G	Ground. Connect to system Ground.
B3	GND	G	G	Ground. Connect to system Ground.
D7	GND	G	G	Ground. Connect to system Ground.

(1)

Type		I/O	
A	Analog Pin	I	Input Pin
D	Digital Pin	O	Output Pin
P	Power Connection	G	Ground

Copyright © 2011–2014, Texas Instruments Incorporated

7 Specifications

7.1 Absolute Maximum Ratings

over operating free-air temperature range (unless otherwise noted) (1)(2)(3)

	MIN	MAX	UNIT
VIN, VCOMP	−0.3	6	V
VIN_IO, VIN_B1, VIN_B2, VIN_B3, SPI_CS, SPI_DI, SPI_CLK, SPI_DO, IRQ, HL_B2, HL_B3, STANDBY, RESET, SW_B1, SW_B2, SW_B3, FB_B1, FB_B2, FB_B3, LDO	−0.3	6	
Junction Temperature ($T_{J\text{-}MAX}$)		150	°C

(1) Stresses beyond those listed under *Absolute Maximum Ratings* may cause permanent damage to the device. These are stress ratings only, which do not imply functional operation of the device at these or any other conditions beyond those indicated under *Recommended Operating Conditions*. Exposure to absolute-maximum-rated conditions for extended periods may affect device reliability.
(2) Internal thermal shutdown protects device from permanent damage. Thermal shutdown engages at T_J = 140°C and disengages at T_J = 120°C (typ.). Thermal shutdown is ensured by design.
(3) If Military/Aerospace specified devices are required, please contact the Texas Instruments Sales Office/ Distributors for availability and specifications.

7.2 Handling Ratings

			MIN	MAX	UNIT
T_{stg}	Storage temperature range		–65	150	°C
$V_{(ESD)}$	Electrostatic discharge	Human body model (HBM), per ANSI/ESDA/JEDEC JS-001, all pins(1)	–2000	2000	V

(1) JEDEC document JEP155 states that 500-V HBM allows safe manufacturing with a standard ESD control process.

7.3 Recommended Operating Conditions

over operating free-air temperature range (unless otherwise noted)

	MIN	MAX	UNIT
VIN_B1, VIN_B2_VIN_B3, VIN	3	5.5	V
VIN_IO (< V_{IN})	1.72	3.63 (but < V_{IN})	
All pins except VIN_IO	0	V_{IN}	
Junction temperature (T_J)	−40	125	°C
Ambient temperature (T_A)	−40	85	
Maximum continuous power dissipation ($P_{D\text{-}MAX}$) (1)		0.9	W

(1) In applications where high power dissipation and/or poor thermal resistance is present the maximum ambient temperature may have to be derated. Maximum ambient temperature ($T_{A\text{-}MAX}$) is dependent on the maximum operating junction temperature ($T_{J\text{-}MAX\text{-}OP}$ = 125°C), the maximum power dissipation of the device in the application ($P_{D\text{-}MAX}$), and the junction-to-ambient thermal resistance of the part/package in the application ($R_{\theta JA}$), as given by the following equation: $T_{A\text{-}MAX} = T_{J\text{-}MAX\text{-}OP} – (R_{\theta JA} \times P_{D\text{-}MAX})$.

7.4 Thermal Information

THERMAL METRIC(1)		LM10506 DSBGA 34 PINS	UNIT
$R_{\theta JA}$	Junction-to-ambient thermal resistance	44.5	°C/W

(1) For more information about traditional and new thermal metrics, see the *IC Package Thermal Metrics* application report, SPRA953.

Copyright © 2011–2014, Texas Instruments Incorporated

7.5 General Electrical Characteristics[1][2]

Unless otherwise noted, V_{IN} = 5 V where: $V_{IN} = V_{VIN_B1} = V_{VIN_B2} = V_{VIN_B3}$. Limits apply for T_J = 25°C, unless otherwise noted.

SYMBOL	PARAMETER	TEST CONDITIONS	MIN	TYP	MAX	UNIT
$I_{Q(STANDBY)}$	Quiescent supply current	STANDBY = HIGH, no load		100	200[3]	µA
UNDER/OVERVOLTAGE LOCK OUT						
V_{UVLO_RISING}				2.90		V
$V_{UVLO_FALLING}$				2.60		
V_{OVLO_RISING}				5.82		
$V_{OVLO_FALLING}$				5.70		
DIGITAL INTERFACE						
V_{IL}	Logic input low	SPI_CS, SPI_DI, SPI_CLK, RESET, STANDBY			0.3*VIN_IO[3]	V
V_{IH}	Logic input high		0.7*VIN_IO[3]			
V_{IL}	Logic input low	HL_B2, HL_B3			0.3*VIN[3]	
V_{IH}	Logic input high		0.7*VIN[3]			
V_{OL}	Logic output low	SPI_DO, IRQ			0.2*VIN_IO[3]	
V_{OH}	Logic output high		0.8*VIN_IO[3]			
I_{IL}	Input current, pin driven low	SPI_CS, SPI_DI, SPI_CLK, HL_B2, STANDBY	−2			µA
		HL_B3, RESET	−5			
I_{IH}	Input current, pin driven high	SPI_CS, SPI_DI, SPI_CLK, HL_B3, RESET			2	µA
		HL_B2, STANDBY			5	
f_{SPI_MAX}	SPI max frequency				10[3]	MHz
t_{RESET}	Minimum high-pulse width [4]			2[3]		µs
$t_{STANDBY}$				2[3]		

(1) All limits are ensured by design, test and/or statistical analysis. All electrical characteristics having room-temperature limits are tested during production with T_J = 25°C. All hot and cold limits are ensured by correlating the electrical characteristics to process and temperature variations and applying statistical process control.
(2) Capacitors: Low-ESR Surface-Mount Ceramic Capacitors (MLCCs) are used in setting electrical characteristics.
(3) Limits apply over the entire operating junction temperature range of −40°C ≤ $T_A = T_J$ ≤ 85°C.
(4) Specification ensured by design. Not tested during production.

Copyright © 2011–2014, Texas Instruments Incorporated

7.6 Buck 1 Electrical Characteristics[1][2][3]

Unless otherwise noted, V_{IN} = 5 V where: $V_{IN} = V_{VIN_B1} = V_{VIN_B2} = V_{VIN_B3}$. Limits apply for T_J = 25°C, unless otherwise noted.

SYMBOL	PARAMETER	TEST CONDITIONS	MIN	TYP	MAX	UNIT
I_Q	DC bias current in V_{IN}	No Load, PFM Mode		15	50[4]	µA
I_{PEAK}	Peak switching current limit	Buck 1 enabled, switching in PWM	1.6[4]	1.8	2.1[4]	A
η	Efficiency peak, Buck 1 [5]	I_{OUT} = 0.3 A		90%		
f_{SW}	Switching frequency		1.75[4]	2	2.3[4]	MHz
C_{IN}	Input capacitor [5]	0 mA ≤ I_{OUT} ≤ 1.3 A		4.7		µF
C_{OUT}	Output filter capacitor [5]		10	10	100	µF
	Output capacitor ESR [5]				20	mΩ
L	Output filter inductance [5]			2.2		µH
ΔVOUT	DC line regulation [5]	3.3 V ≤ V_{IN} ≤ 5 V, I_{OUT} = 1.3 A		0.5		%/V
	DC load regulation [5]	0.13 A ≤ I_{OUT} ≤ 1.3 A		0.3		%/A
I_{FB}	Feedback pin input bias current	V_{FB} = 3 V		2.1	5[4]	µA
$R_{DS-ON-HS}$	High side switch on resistance			135		mΩ
		V_{IN} = 2.6 V		215		
$R_{DS-ON-LS}$	Low side switch on resistance			85	190[4]	mΩ
R_{DS-ON_BYPASS}	Bypass FET on resistance	Used in parallel with the high side FET while in Bypass mode. Resistance (DCR) of inductor = 100 mΩ				
		V_{IN} = 3.3 V		85		mΩ
		V_{IN} = 2.6 V		120		
STARTUP						
T_{START}	Internal soft-start (turn on time) [5]	Start-up from shutdown, V_{OUT} = 0V, no load, LC = recommended circuit, using software enable, to V_{OUT} = 95% of final value		0.1		ms

(1) All limits are ensured by design, test and/or statistical analysis. All electrical characteristics having room-temperature limits are tested during production with T_J = 25°C. All hot and cold limits are ensured by correlating the electrical characteristics to process and temperature variations and applying statistical process control.
(2) Capacitors: Low-ESR Surface-Mount Ceramic Capacitors (MLCCs) are used in setting electrical characteristics.
(3) BUCK normal operation is ensured if $V_{IN} \geq V_{OUT}$+1 V.
(4) Limits apply over the entire operating junction temperature range of −40°C ≤ $T_A = T_J$ ≤ 85°C.
(5) Specification ensured by design. Not tested during production.

7.7 Buck 2 Electrical Characteristics[1][2][3]

Unless otherwise noted, V_{IN} = 5 V where: $V_{IN} = V_{VIN_B1} = V_{VIN_B2} = V_{VIN_B3}$. Limits apply for T_J = 25°C, unless otherwise noted.

SYMBOL	PARAMETER	TEST CONDITIONS	MIN	TYP	MAX	UNIT
I_Q	DC bias current in V_{IN}	No Load, PFM Mode		15	50[4]	µA
I_{PEAK}	Peak switching current limit	Buck 2 enabled, switching in PWM	0.65[4]	1.1	1.55[4]	A
η	Efficiency peak, Buck 2 [5]	I_{OUT} = 0.3 A		90%		
f_{SW}	Switching frequency		1.75[4]	2	2.3[4]	MHz

(1) All limits are ensured by design, test and/or statistical analysis. All electrical characteristics having room-temperature limits are tested during production with T_J = 25°C. All hot and cold limits are ensured by correlating the electrical characteristics to process and temperature variations and applying statistical process control.
(2) Capacitors: Low-ESR Surface-Mount Ceramic Capacitors (MLCCs) are used in setting electrical characteristics.
(3) BUCK normal operation is ensured if $V_{IN} \geq V_{OUT}$+1 V.
(4) Limits apply over the entire operating junction temperature range of −40°C ≤ $T_A = T_J$ ≤ 85°C.
(5) Specification ensured by design. Not tested during production.

Buck 2 Electrical Characteristics[1][2][3] (continued)

Unless otherwise noted, V_{IN} = 5 V where: $V_{IN} = V_{VIN_B1} = V_{VIN_B2} = V_{VIN_B3}$. Limits apply for T_J = 25°C, unless otherwise noted.

SYMBOL	PARAMETER	TEST CONDITIONS	MIN	TYP	MAX	UNIT
C_{IN}	Input capacitor [5]	0 mA ≤ I_{OUT} ≤ 400 mA		4.7		µF
C_{OUT}	Output filter capacitor [5]		10	10	100	µF
	Output capacitor ESR [5]				20	mΩ
L	Output filter inductance [5]			2.2		µH
ΔVOUT	DC line regulation [5]	3.3 V ≤ V_{IN} ≤ 5 V, I_{OUT} = 400 mA		0.5		%/V
	DC load regulation [5]	100 mA ≤ I_{OUT} ≤ 400 mA		0.3		%/A
I_{FB}	Feedback pin input bias current	V_{FB} = 1.8 V		1.8	5[4]	µA
$R_{DS-ON-HS}$	High side switch on resistance			135		mΩ
		V_{IN} = 2.6 V		260		
$R_{DS-ON-LS}$	Low side switch on resistance			85	190[4]	
STARTUP						
T_{START}	Internal soft-start (turn on time) [5]	Startup from shutdown, V_{OUT} = 0V, no load, LC = recommended circuit, using software enable, to V_{OUT} = 95% of final value		0.1		ms

7.8 Buck 3 Electrical Characteristics[1][2][3]

Unless otherwise noted, V_{IN} = 5 V where: $V_{IN} = V_{VIN_B1} = V_{VIN_B2} = V_{VIN_B3}$. Limits apply for T_J = 25°C, unless otherwise noted.

SYMBOL	PARAMETER	TEST CONDITIONS	MIN	TYP	MAX	UNIT
I_Q	DC bias current in V_{IN}	No Load, PFM Mode		15	50[4]	µA
I_{PEAK}	Peak switching current limit	Buck 3 enabled, switching in PWM	0.9[4]	1.2	1.7[4]	A
η	Efficiency peak, Buck 3 [5]	I_{OUT} = 0.3 A		90%		
f_{SW}	Switching frequency		1.75[4]	2	2.3[4]	MHz
C_{IN}	Input Capacitor [5]	0 mA ≤ I_{OUT} ≤ 600 mA		4.7		µF
C_{OUT}	Output Filter Capacitor [5]		10	10	100	µF
	Output Capacitor ESR [5]				20	mΩ
L	Output Filter Inductance [5]			2.2		µH
ΔVOUT	DC Line regulation [5]	3.3 V ≤ V_{IN} ≤ 5 V, I_{OUT} = 600 mA		0.5		%/V
	DC Load regulation [5]	150 mA ≤ I_{OUT} ≤ 600 mA		0.3		%/A
I_{FB}	Feedback pin input bias current	V_{FB} = 1.2 V		0.9	5[4]	µA
$R_{DS-ON-HS}$	High Side Switch On Resistance			135		mΩ
		V_{IN} = 2.6 V		260		
$R_{DS-ON-LS}$	Low Side Switch On Resistance			85	190[4]	
STARTUP						
T_{START}	Internal soft-start (turn on time) [5]	Startup from shutdown, V_{OUT} = 0 V, no load, LC = recommended circuit, using software enable, to V_{OUT} = 95% of final value		0.1		ms

(1) All limits are ensured by design, test and/or statistical analysis. All electrical characteristics having room-temperature limits are tested during production with T_J = 25°C. All hot and cold limits are ensured by correlating the electrical characteristics to process and temperature variations and applying statistical process control.
(2) Capacitors: Low-ESR Surface-Mount Ceramic Capacitors (MLCCs) are used in setting electrical characteristics.
(3) BUCK normal operation is ensured if $V_{IN} \geq V_{OUT}$+1 V.
(4) Limits apply over the entire operating junction temperature range of −40°C ≤ $T_A = T_J$ ≤ 85°C.
(5) Specification ensured by design. Not tested during production.

Copyright © 2011–2014, Texas Instruments Incorporated

7.9 LDO Electrical Characteristics(1)(2)

Unless otherwise noted, V_{IN} = 5 V where: $V_{IN} = V_{VIN_B1} = V_{VIN_B2} = V_{VIN_B3}$. Limits apply for T_J = 25°C, unless otherwise noted.

PARAMETER		TEST CONDITIONS		MIN	TYP	MAX	UNIT
V_{OUT}	Output voltage accuracy	I_{OUT} = 1 mA		–3%(3)		3%(3)	
I_{SC}	Short-circuit current limit	V_{OUT} = 0 V			0.3		
		V_{IN} = 3.3 V, V_{OUT} = 0 V (4)			0.5		
V_{DO}	Dropout voltage	I_{OUT} = 100 mA			60	100(3)	mV
ΔV_{OUT}	Line regulation	3.3 V ≤ V_{IN} ≤ 5.5 V, I_{OUT} = 1 mA			5		
	Load regulation	1 mA ≤ I_{OUT} ≤ 100 mA, V_{IN} = 3.3 V, 5 V			5		
e_N	Output noise voltage(4)	10 Hz ≤ f ≤ 100 kHz	V_{IN} = 5 V		10		μV_{RMS}
			V_{IN} = 3.3 V		35		
PSSR	Power supply rejection ratio(4)	F = 10 kHz, C_{OUT} = 4.7 µF, I_{OUT} = 20 mA	V_{IN} = 5 V		65		dB
			V_{IN} = 3.3 V		40		
$t_{STARTUP}$	Start-up time from shutdown(4)	C_{OUT} = 4.7 µF, I_{OUT} = 100 mA	V_{IN} = 5 V		45		µs
			V_{IN} = 3.3 V		60		
$t_{TRANSIENT}$	Start-up transient overshoot(4)					30(3)	mV

(1) All limits are ensured by design, test and/or statistical analysis. All electrical characteristics having room-temperature limits are tested during production with T_J = 25°C. All hot and cold limits are ensured by correlating the electrical characteristics to process and temperature variations and applying statistical process control.
(2) Capacitors: Low-ESR Surface-Mount Ceramic Capacitors (MLCCs) are used in setting electrical characteristics.
(3) Limits apply over the entire operating junction temperature range of −40°C ≤ $T_A = T_J$ ≤ 85°C.
(4) Specification ensured by design. Not tested during production.

7.10 Comparators Electrical Characteristics(1) (2)

Unless otherwise noted, V_{IN} = 5 V where: $V_{IN} = V_{IN_B1} = V_{IN_B2} = V_{IN_B3}$. Limits apply for T_J = 25°C, unless otherwise noted.

SYMBOL	PARAMETER	TEST CONDITIONS	MIN	TYP	MAX	UNIT
I_{VCOMP}	VCOMP pin bias current	V_{COMP} = 0 V		0.1	2(3)	µA
		V_{COMP} = 5 V		0.1	2(3)	
V_{COMP_RISE}	Comparator rising edge trigger level			2.826		V
V_{COMP_FALL}	Comparator falling edge trigger level			2.768		
Hysteresis			30(3)	60	80(3)	mV
IRQ_{VOH}	Output voltage high				0.8*VIN_IO(3)	V
IRQ_{VOL}	Output voltage low		0.2*VIN_IO(3)			
t_{COMP}	Transition time of IRQ output			6	15(3)	µsec

(1) All limits are ensured by design, test and/or statistical analysis. All electrical characteristics having room-temperature limits are tested during production with T_J = 25°C. All hot and cold limits are ensured by correlating the electrical characteristics to process and temperature variations and applying statistical process control.
(2) Capacitors: Low-ESR Surface-Mount Ceramic Capacitors (MLCCs) are used in setting electrical characteristics.
(3) Limits apply over the entire operating junction temperature range of −40°C ≤ $T_A = T_J$ ≤ 85°C.

Copyright © 2011–2014, Texas Instruments Incorporated

7.11 Typical Characteristics

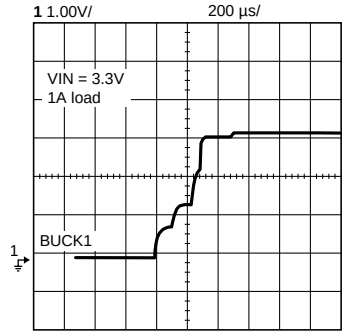

V_{IN} = 3.3 V V_{OUT} = 3 V I_{OUT} = 1 A

Figure 1. Start-Up Of Buck 1

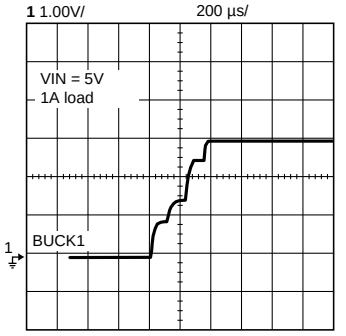

V_{IN} = 5 V V_{OUT} = 3 V I_{OUT} = 1 A

Figure 2. Start-Up Of Buck 1

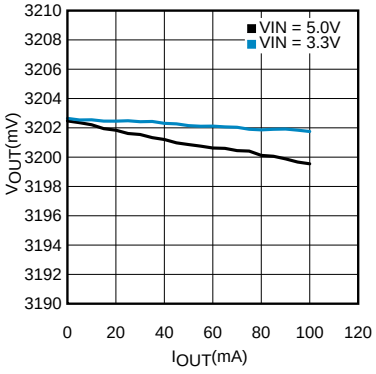

Figure 3. LDO V_{OUT} vs. I_{OUT}

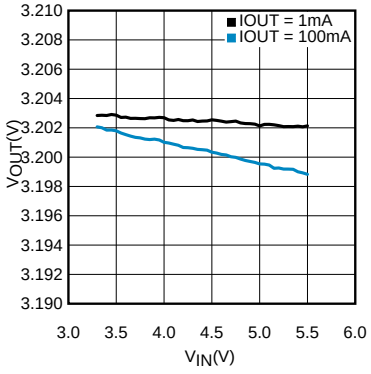

Figure 4. LDO V_{IN} vs. V_{OUT}

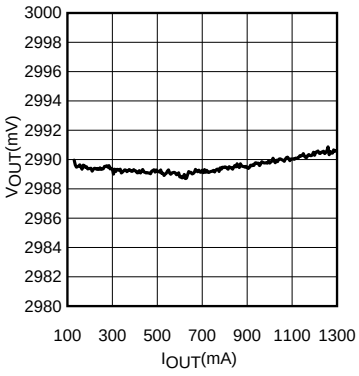

V_{IN} = 5 V V_{OUT} = 3 V

Figure 5. Buck 1 V_{OUT} vs. I_{OUT}

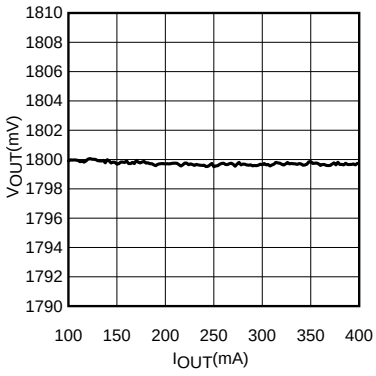

V_{IN} = 5 V V_{OUT} = 1.8 V

Figure 6. Buck 2 V_{OUT} vs. I_{OUT}

Copyright © 2011–2014, Texas Instruments Incorporated

Typical Characteristics (continued)

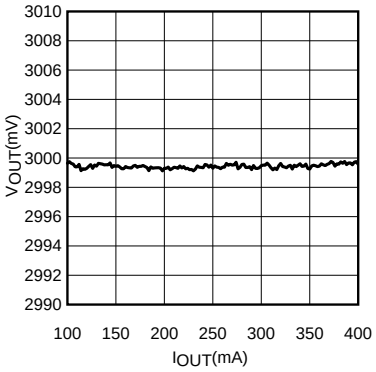

V_{IN} = 5 V V_{OUT} = 3 V

Figure 7. Buck 2 V_{OUT} vs. I_{OUT}

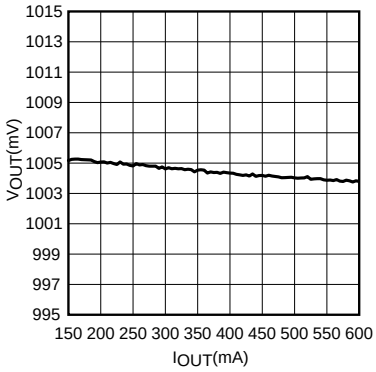

V_{IN} = 5 V V_{OUT} = 1 V

Figure 8. Buck 3 V_{OUT} vs. I_{OUT}

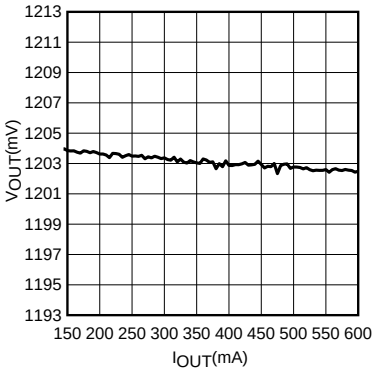

V_{IN} = 5 V V_{OUT} = 1.2 V

Figure 9. Buck 3 V_{OUT} vs. I_{OUT}

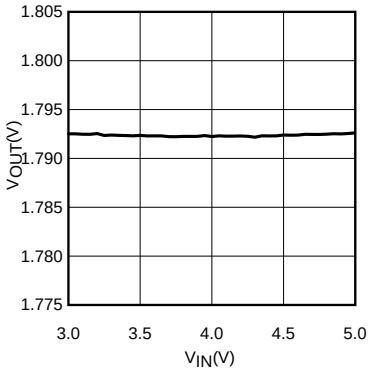

V_{OUT} = 1.8 V I_{OUT} = 400 mA

Figure 10. Buck 2 V_{OUT} vs. V_{IN}

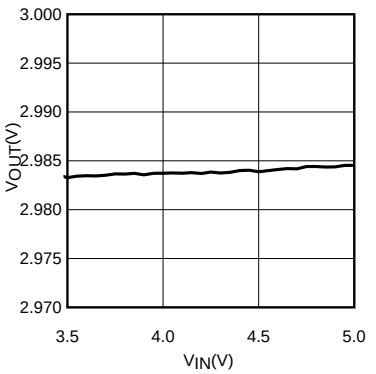

V_{OUT} = 3 V I_{OUT} = 400 mA

Figure 11. Buck 2 V_{OUT} vs. V_{IN}

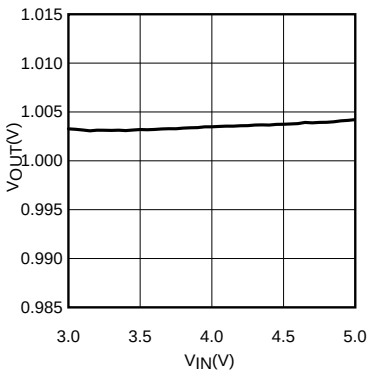

V_{OUT} = 1 V I_{OUT} = 600 mA

Figure 12. Buck 3 V_{OUT} vs V_{IN}

Copyright © 2011–2014, Texas Instruments Incorporated

Typical Characteristics (continued)

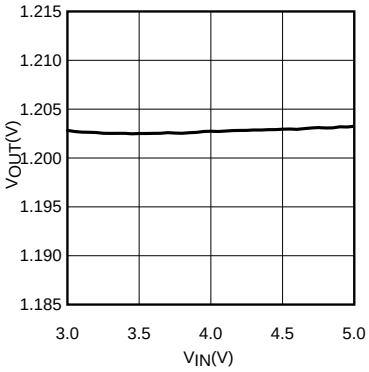

V_{OUT} = 1.2 V I_{OUT} = 600 mA

Figure 13. Buck 3 V_{OUT} vs V_{IN}

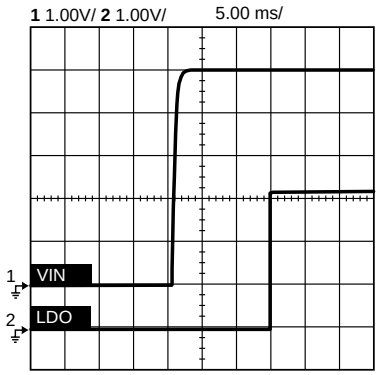

Figure 14. LDO Start-Up Time From V_{IN} Rise

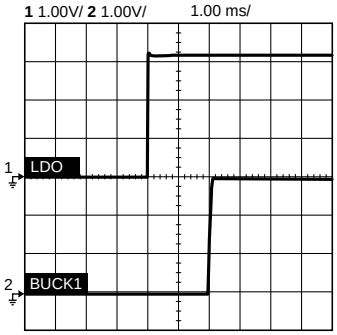

Figure 15. From LDO Start-Up To Buck 1 Start-Up

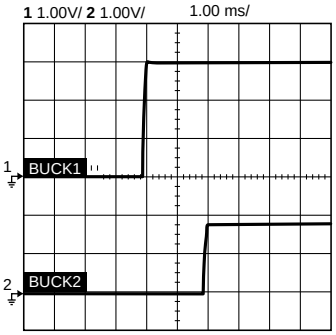

Figure 16. From Buck 1 Start-Up To Buck 2 Start-Up

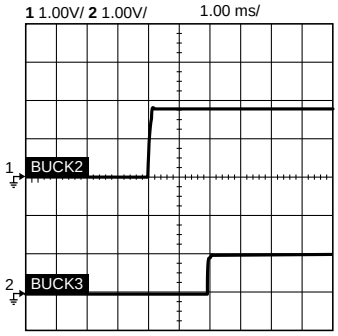

Figure 17. From Buck 2 Start-Up To Buck 3 Start-Up

Copyright © 2011–2014, Texas Instruments Incorporated

8 Detailed Description

The LM10506 is a highly efficient and integrated Power Management Unit for Systems-on-a-Chip (SoCs), ASICs, and processors. It operates cooperatively and communicates with processors over an SPI interface with output Voltage programmability and Standby Mode.

The device incorporates three high-efficiency synchronous buck regulators and one LDO that deliver four output voltages from a single power source. The device also includes a SPI-programmable Comparator Block that provides an interrupt output signal.

8.1 Functional Block Diagram

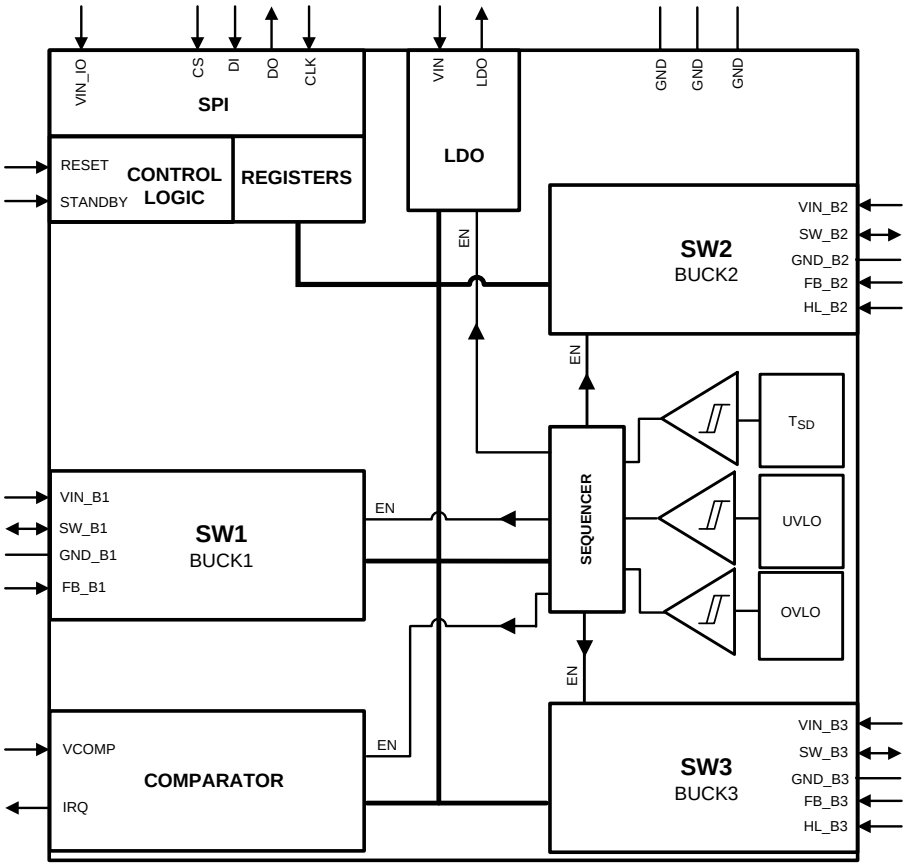

8.2 Feature Description

8.2.1 Buck Regulators Operation

A buck converter contains a control block, a switching PFET connected between input and output, a synchronous rectifying NFET connected between the output and ground and a feedback path. The following figure shows the block diagram of each of the three buck regulators integrated in the device.

Copyright © 2011–2014, Texas Instruments Incorporated

Feature Description (continued)

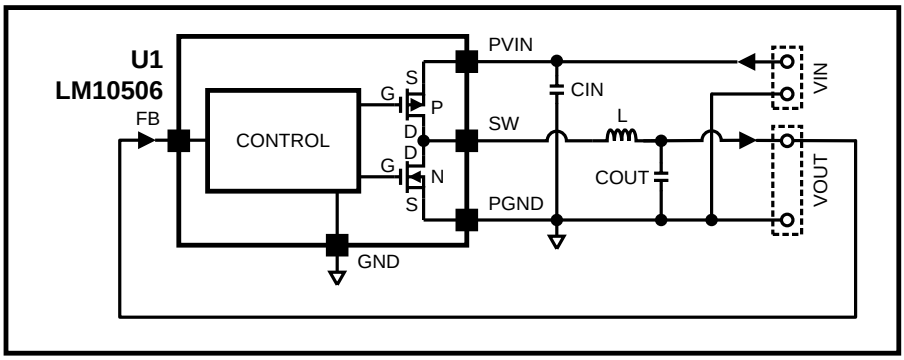

Figure 18. Buck Functional Diagram

During the first portion of each switching cycle, the control block turns on the internal PFET switch. This allows current to flow from the input through the inductor to the output filter capacitor and load. The inductor limits the current to a ramp with a slope of $(V_{IN} – V_{OUT})/L$ by storing energy in a magnetic field. During the second portion of each cycle, the control block turns the PFET switch off, blocking current flow from the input, and then turns the NFET synchronous rectifier on. The inductor draws current from ground through the NFET to the output filter capacitor and load, which ramps the inductor current down with a slope of $(–V_{OUT})/L$.

The output filter stores charge when the inductor current is high, and releases it when low, smoothing the voltage across the load. The output voltage is regulated by modulating the PFET switch on time to control the average current sent to the load. The effect is identical to sending a duty-cycle modulated rectangular wave formed by the switch and synchronous rectifier at the SW pin to a low-pass filter formed by the inductor and output filter capacitor. The output voltage is equal to the average voltage at the SW pin.

8.2.1.1 Buck Regulators Description

The LM10506 incorporates three high-efficiency synchronous switching buck regulators that deliver various voltages from a single DC input voltage. They include many advanced features to achieve excellent voltage regulation, high efficiency and fast transient response time. The bucks feature voltage mode architecture with synchronous rectification.

Each of the switching regulators is specially designed for high-efficiency operation throughout the load range. With a 2MHz typical switching frequency, the external L- C filter can be small and still provide very low output voltage ripple. The bucks are internally compensated to be stable with the recommended external inductors and capacitors as detailed in the application diagram. Synchronous rectification yields high efficiency for low voltage and high output currents.

All bucks can operate up to a 100% duty cycle allowing for the lowest possible input voltage that still maintains the regulation of the output. The lowest input to output dropout voltage is achieved by keeping the PMOS switch on.

Additional features include soft-start, undervoltage lockout, bypass, and current and thermal overload protection. To reduce the input current ripple, the device employs a control circuit that operates the 3 bucks at 120° phase. These bucks are nearly identical in performance and mode of operation. They can operate in FPWM (forced PWM) or automatic mode (PWM/PFM).

8.2.1.2 PWM Operation

During PWM operation the converter operates as a voltage-mode controller with input voltage feed forward. This allows the converter to achieve excellent load and line regulation. The DC gain of the power stage is proportional to the input voltage. To eliminate this dependence, a feed forward voltage inversely proportional to the input voltage is introduced.

In **Forced PWM Mode** the bucks always operate in PWM mode regardless of the output current.

Copyright © 2011–2014, Texas Instruments Incorporated

Feature Description (continued)

In **Automatic Mode**, if the output current is less than 70 mA (typ.), the bucks automatically transition into PFM (Pulse Frequency Modulation) operation to reduce the current consumption. At higher than 100 mA (typ.) they operate in PWM mode. This increases the efficiency at lower output currents. The 30 mA (typ.) hysteresis is designed in for stable Mode transition.

While in PWM mode, the output voltage is regulated by switching at a constant frequency and then modulating the energy per cycle to control power to the load. At the beginning of each clock cycle the PFET switch is turned on, and the inductor current ramps up until the comparator trips and the control logic turns off the switch. The current limit comparator can also turn off the switch in case the current limit of the PFET is exceeded. In this case the NFET switch is turned on and the inductor current ramps down. The next cycle is initiated by the clock turning off the NFET and turning on the PFET.

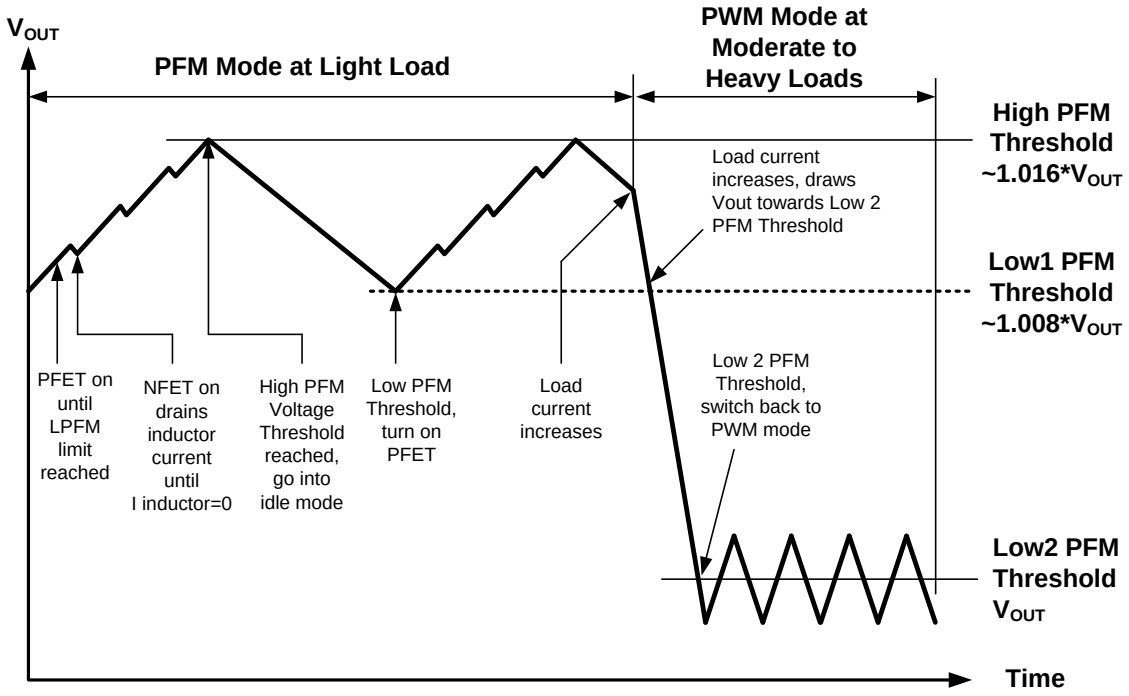

Figure 19. PFM vs PWM Operation

8.2.1.3 PFM Operation (Bucks 1, 2 & 3)

At very light loads, Bucks 1, 2, and Buck 3 enter PFM mode and operate with reduced switching frequency and supply current to maintain high efficiency.

Bucks 1, 2, and 3 will automatically transition into PFM mode when either of two conditions occurs for a duration of 32 or more clock cycles:

1. The inductor current becomes discontinuous, or
2. The peak PMOS switch current drops below the I_{MODE} level.

During PFM operation, the converter positions the output voltage slightly higher than the nominal output voltage during PWM operation, allowing additional headroom for voltage drop during a load transient from light to heavy load. The PFM comparators sense the output voltage via the feedback pin and control the switching of the output FETs such that the output voltage ramps between 0.8% and 1.6% (typical) above the nominal PWM output voltage. If the output voltage is below the 'high' PFM comparator threshold, the PMOS power switch is turned on. It remains on until the output voltage exceeds the 'high' PFM threshold or the peak current exceeds the I_{PFM} level set for PFM mode.

Copyright © 2011–2014, Texas Instruments Incorporated

Feature Description (continued)

Once the PMOS power switch is turned off, the NMOS power switch is turned on until the inductor current ramps to zero. When the NMOS zero-current condition is detected, the NMOS power switch is turned off. If the output voltage is below the 'high' PFM comparator threshold (see Figure 19), the PMOS switch is again turned on and the cycle is repeated until the output reaches the desired level. Once the output reaches the 'high' PFM threshold, the NMOS switch is turned on briefly to ramp the inductor current to zero and then both output switches are turned off and the part enters an extremely low power mode. Quiescent supply current during this 'idle' mode is less than 100 µA, which allows the part to achieve high efficiencies under extremely light load conditions. When the output drops below the 'low' PFM threshold, the cycle repeats to restore the output voltage to approximately 1.6% above the nominal PWM output voltage.

If the load current should increase during PFM mode causing the output voltage to fall below the 'low2' PFM threshold, the part will automatically transition into fixed-frequency PWM mode.

8.2.1.4 Soft Start

Each of the buck converters has an internal soft-start circuit that limits the in-rush current during startup. This allows the converters to gradually reach the steady-state operating point, thus reducing startup stresses and surges. During startup, the switch current limit is increased in steps.

For **Bucks 1, 2 and 3** the soft start is implemented by increasing the switch current limit in steps that are gradually set higher. The startup time depends on the output capacitor size, load current and output voltage. Typical startup time with the recommended output capacitor of 10 µF is 0.2 ms to 1 ms. It is expected that in the final application the load current condition will be more likely in the lower load current range during the startup.

8.2.1.5 Current Limiting

A current limit feature protects the device and any external components during overload conditions. In PWM mode the current limiting is implemented by using an internal comparator that trips at current levels according to the buck capability. If the output is shorted to ground the device enters a timed current limit mode where the NFET is turned on for a longer duration until the inductor current falls below a low threshold, ensuring inductor current has more time to decay, thereby preventing runaway.

8.2.1.6 Internal Synchronous Rectification

While in PWM mode, the bucks use an internal NFET as a synchronous rectifier to reduce the rectifier forward voltage drop and the associated power loss. Synchronous rectification provides a significant improvement in efficiency whenever the output voltage is relatively low compared to the voltage drop across an ordinary rectifier diode.

8.2.1.7 Bypass FET Operation On Bucks 1 And 2

There is an additional bypass FET used on Buck 1. The FET is connected in parallel to High Side FET and inductor. Buck 2 has no extra bypass FET – it uses High Side FET (PFET) for bypass operation. If Buck 1 input voltage is greater than 3.5 V (2.6 V for Buck 2), the bypass function is disabled. The determination of whether or not the buck regulators are in bypass mode or standard switching regulation is constantly monitored while the regulators are enabled. If at any time the input voltage goes above 3.5 V (2.6 V for Buck 2) while in bypass mode, the regulators will transition to normal operation.

When the bypass mode is enabled, the output voltage of the buck that is in bypass mode is not regulated; instead, the output voltage follows the input voltage minus the voltage drop seen across the FET and DCR of the inductor. The voltage drop is a direct result of the current flowing across those resistive elements. When Buck 1 transitions into bypass mode, there is an extra FET used in parallel along with the high side FET for transmission of the current to the load. This added FET will help reduce the resistance seen by the load and decrease the voltage drop. For Buck 2, the bypass function uses the same high side FET.

Copyright © 2011–2014, Texas Instruments Incorporated

Feature Description (continued)

Equivalent Circuit of Bypass Operation of Buck 1

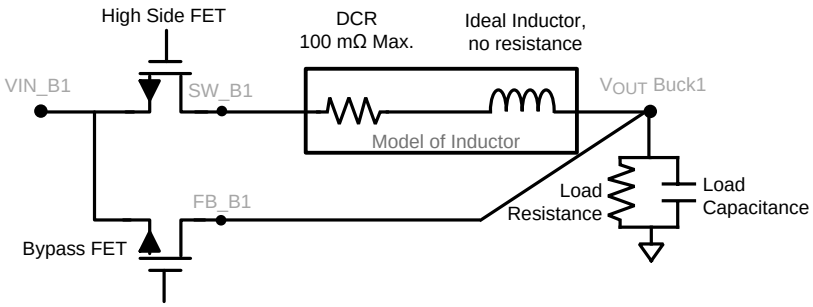

Equivalent Circuit of Bypass Operation of Buck 2

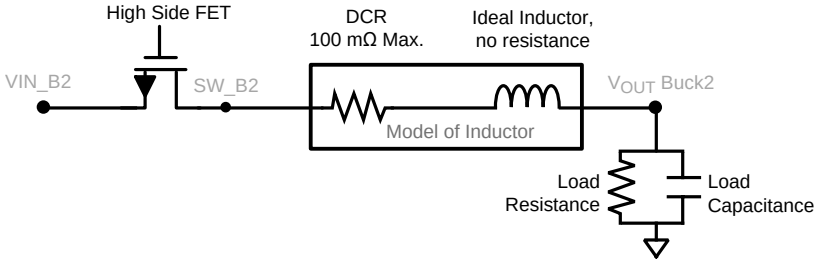

Figure 20. Bucks 1 and 2 Bypass Operations

8.2.1.8 Low Dropout Operation

The device can operate at 100% duty cycle (no switching; PMOS switch completely on) for low dropout support. In this way the output voltage will be controlled down to the lowest possible input voltage. When the device operates near 100% duty cycle, output voltage ripple is approximately 25 mV.

The minimum input voltage needed to support the output voltage:

$V_{IN_MIN}=V_{OUT}+I_{LOAD}*(R_{DSON_PFET}+R_{IND})$, where

- I_{LOAD} = Load Current
- R_{DSON_PFET} = Drain to source resistance of PFET (high side) switch in the triode region
- R_{IND} = Inductor resistance

8.2.1.9 Out of Regulation

When any of the Buck outputs are taken out of regulation (below 85% of the output level) the device will start a shutdown sequence and all other outputs will switch off normally. The device will restart when the forced out-of-regulation condition is removed.

Copyright © 2011–2014, Texas Instruments Incorporated

8.3 Device Functional Modes

8.3.1 Start-Up Sequence

The start-up mode of the LM10506 will depend on the input voltage. Once V_{IN} reaches the UVLO threshold, there is a 15-ms delay before the LM10506 determines how to set up the buck regulators. If V_{IN} is below 3.6 V, then Bucks 1 and 2 will be in bypass mode, see *Bypass FET Operation On Bucks 1 And 2* for functionality description. If the V_{IN} voltage is greater than 3.6 V, the bucks will start up as the standard regulators. The 3 buck regulators are staggered during start-up to avoid large inrush currents. There is a fixed delay of 2 ms between the start-up of each regulator.

The Start-up Sequence will be:

1. 15 ms (±30%) delay after V_{IN} above UVLO
2. LDO → 3.2 V → 3.2 V
3. 2 ms delay
4. Buck 1 → 3 V → 3 V
5. 2 ms delay
6. Buck 2 → 3 V or if H/L_B2 = Low → 1.8 V
   – (For LM10506-A Buck 2 → 2 V or if H/L_B2 = Low → 1.8 V)
7. 2 ms delay
8. Buck 3 → 1.2 V or if H/L_B3 = Low → 1 V

Copyright © 2011–2014, Texas Instruments Incorporated

Device Functional Modes (continued)

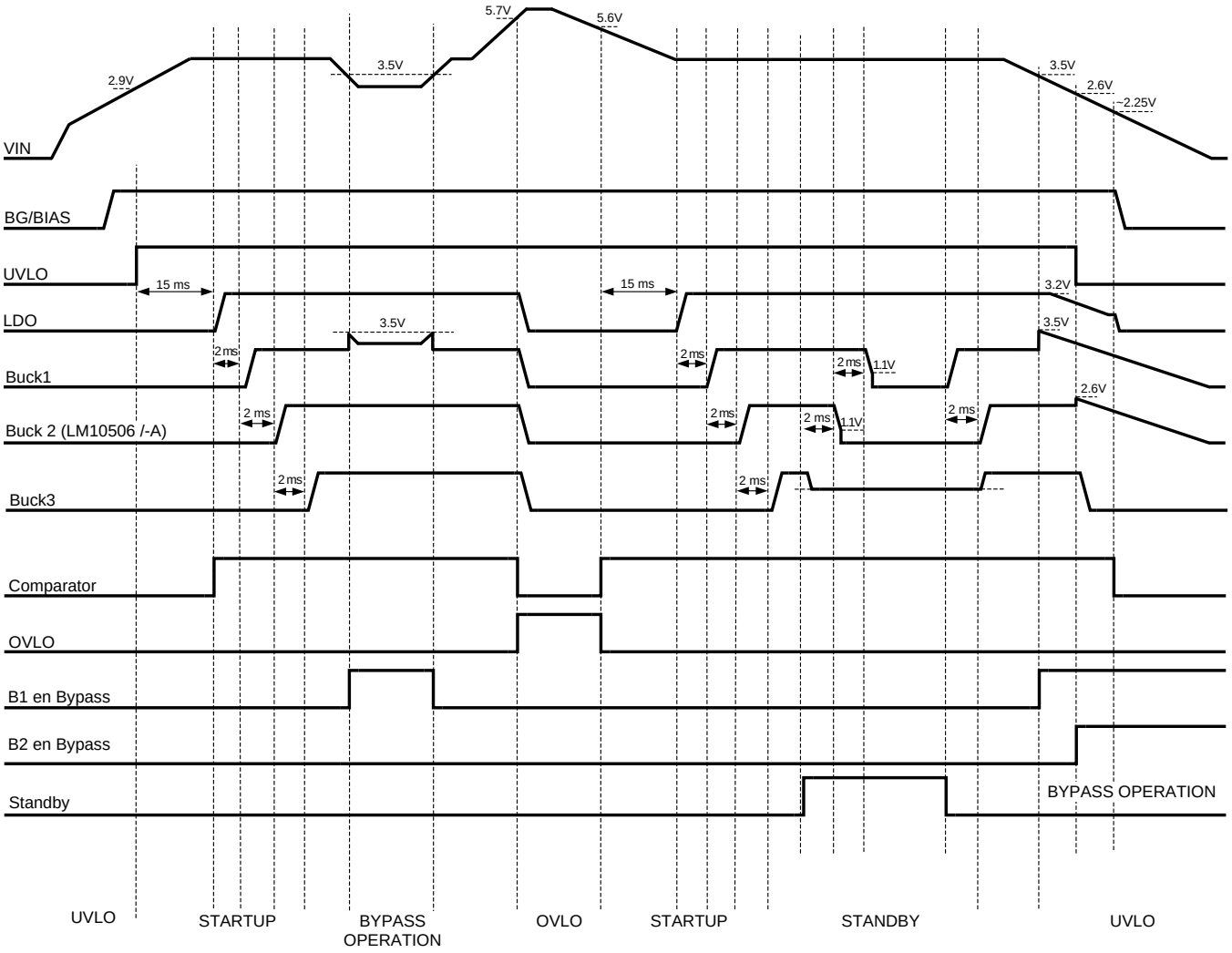

Figure 21. Operating Modes

8.3.2 Power-On Default And Device Enable

The device is always enabled and the LDO is always on, unless outside of operating voltage range. There is no LM10506 ENABLE Pin. Once V_{IN} reaches a minimum required input Voltage the power-up sequence will be started automatically and the startup sequence will be initiated. Once the device is started, the output voltage of the Bucks 1 and 2 can be individually disabled by accessing their corresponding BKEN register bits (BUCK CONTROL).

8.3.3 RESET Pin Function

The RESET pin is internally pulled high. If the reset pin is pulled low, the device will perform a complete reset of all the registers to their default states. This means that all of the voltage settings on the regulators will go back to their default states.

8.3.4 Standby Function

The Device can be programmed into Standby mode. There are 2 ways for doing that:

1. STANDBY pin
2. Programming via SPI

Copyright © 2011–2014, Texas Instruments Incorporated

Device Functional Modes (continued)

8.3.4.1 STANDBY Pin

When the STANDBY pin is asserted high, the LM10506 will enter Standby Mode. While in Standby Mode, Buck 1 and Buck 2 are disabled. Buck 3's output voltage is transitioned to the PSML (Programmable Standby Mode Level) as set by register 0x09. The STANDBY pin is internally pulled down, and there is a 1 second delay during powerup before the state of the STANDBY pin is checked.

NOTE

If Buck 1 and Buck 2 are already disabled, and the STANDBY pin is asserted high, then Buck 3 will not go to PSML – for further instructions, see *STANDBY Programming via SPI*.

Bucks 1 and 2 will be ramped down when the disable signal is given. Buck 1 starts ramping 2 ms after Buck 2 has started ramping.

Entering Standby Sequence will be:

1. Buck 3 → PSML (Programmable Standby Mode Level)
2. 2 ms delay
3. Buck 2 → Disabled
4. 2 ms delay
5. Buck 1 → Disabled

An internal pulldown resistor 22 kΩ (±30%) is attached to the FB pin of Buck 1 and Buck 2. The outputs of Buck 1 and 2 are pulled to ground level when they are disabled to discharge any residual charge present in the output circuitry. When STANDBY transitions to a low, Buck 1 is again enabled followed by Buck 2. Buck 3 will go back to its previous state.

When waking up from Standby, the sequence will be:

1. Buck 1 → Previous State
2. 2 ms delay
3. Buck 2 and Buck 3 transition together → Previous State

8.3.4.2 Standby Programming Via SPI

There is no bit which has the same function as the STANDBY pin. There is only one requirement programming LM10506 into Standby Mode via SPI. Setting LDO Sleep Mode bit high must be the last move when entering Standby Mode and programming the bit low when waking from Standby Mode must be the first move. Disabling or programming the Bucks to new level is the user's decision based on power consumption and other requirements.

The following section describes how to program the chip into Standby Mode corresponding to STANDBY PIN function.

To program the LM10506 to Standby Mode via SPI Buck 1 and Buck 2 must be disabled by host device (Register 0x0A bit 1 and 0). Buck 3 must be programmed to desired level using Register 0x00. After Buck 3 has finished ramping LDO Sleep Mode bit must be set high (Register 0x0E bit 1). To wake LM10506 from Standby Mode LDO Sleep Mode bit must be set low (Register 0x0E bit 1). Bucks 1 and 2 must be enabled. Buck 3 voltage must be programmed to previous output level. For LM10506 -C, -D,when Buck 1 is re-enabled upon exiting STANDBY, soft start will engage.

8.3.4.3 Standby Mode, Operational Constraints

In Standby mode the device is in a low power mode. All internal clocks are turned off to conserve power and Buck 3 will only operate in PFM mode. While limited to PFM mode the loading on Buck 3 should be kept below 80 mA typ. to remain below the PFM/PWM threshold and avoid device shutdown. It is recommended that the device loading should be lowered accordingly prior to entering standby mode via STANDBY.

Copyright © 2011–2014, Texas Instruments Incorporated

Device Functional Modes (continued)

8.3.5 HL_B2, HL_B3 Function

The HL_B2/3 pins are digital pins which control alternate voltage selections of Buck 2 and Buck 3, respectively. HL_B2 has an internal pulldown which defaults to a 1.8-V output voltage selection for Buck 2. Alternatively, if HL_B2 is driven high, an output voltage of 3 V (or 2 V for LM10506-A) is selected. HL_B3 has an internal pull-up which defaults to a 1.2-V output voltage selection for Buck 3. Alternatively, if HL_B3 is driven low, an output voltage of 1 V is selected. The pull-up resistor is connected to the main input voltage. Transitions of the pins will not affect the output voltage, the state is only checked during start-up.

8.3.6 Undervoltage Lockout (UVLO)

The V_{IN} voltage is monitored for a supply under voltage condition, for which the operation of the device can not be ensured. The part will automatically disable Buck 3. To prevent unstable operation, the undervoltage lockout (UVLO) has a hysteresis window of about 300 mV. An UVLO will force the device into the reset state, all internal registers are reset. Once the supply voltage is above the UVLO hysteresis, the device will initiate a power-up sequence and then enter the active state.

Buck 1 and Buck 2 will remain in bypass mode after V_{IN} passes the UVLO until V_{IN} reaches approximately 1.9 V. When Buck 2 is set to 1.8 V, the voltage will jump from 1.8 V to $V_{UVLO_FALLING}$, and then follow V_{IN}.

For LM10506 -C, -D,when Buck 1 is re-enabled upon exiting STANDBY, soft start will engage.

The LDO and the Comparator will remain functional past the UVLO threshold until V_{IN} reaches approximately 2.25 V.

8.3.7 Overvoltage Lockout (OVLO)

The V_{IN} voltage is monitored for a supply over voltage condition, for which the operation of the device cannot be ensured. The purpose of overvoltage lockout (OVLO) is to protect the part and all other consumers connected to the PMU outputs from any damage and malfunction. Once V_{IN} rises over 5.7 V all the Bucks, and LDO will be disabled automatically. To prevent unstable operation, the OVLO has a hysteresis window of about 100 mV. An OVLO will force the device into the reset state; all internal registers are reset. Once the supply voltage is below the OVLO hysteresis, the device will initiate a power-up sequence, and then enter the active state. Operating maximum input voltage at which parameters are ensured is 5.5 V. Absolute maximum of the device is 6 V.

8.3.8 Interrupt Enable/Interrupt Status

The LM10506 has 2 interrupt registers, INTERRUPT ENABLE and INTERRUPT STATUS. These registers can be read via the serial interface. The interrupts are not latched to the register and will always represent the current state and will not be cleared on a read.

If interrupt condition is detected, then corresponding bit in the INTERRUPT STATUS register (0x0D) is set to '1', and IRQ output is asserted. There are 5 interrupt generating conditions:

- Buck 3 output is over flag level (90% when rising, 85% when falling)
- Buck 2 output is over flag level (90% when rising, 85% when falling)
- Buck 1 output is over flag level (90% when rising, 85% when falling)
- LDO is over flag level (90% when rising, 85% when falling
- Comparator input voltage crosses over selected threshold

Reading the interrupt register will not release IRQ output. Interrupt generation conditions can be individually enabled or disabled by writing respective bits in INTERRUPT ENABLE register (0x0C) to '1' or '0'.

8.3.9 Thermal Shutdown (TSD)

The temperature of the silicon die is monitored for an over-temperature condition, for which the operation of the device can not be ensured. The part will automatically be disabled if the temperature is too high. The thermal shutdown (TSD) will force the device into the reset state. In reset, all circuitry is disabled. To prevent unstable operation, the TSD has a hysteresis window of about 20°C. Once the temperature has decreased below the TSD hysteresis, the device will initiate a powerup sequence and then enter the active state. In the active state, the part will start up as if for the first time, all registers will be in their default state.

Copyright © 2011–2014, Texas Instruments Incorporated

Device Functional Modes (continued)

8.3.10 Comparator

The comparator on the LM10506 takes its inputs from the VCOMP pin and an internal threshold level which is programmed by the user. The threshold level is programmable between 2 V and 4 V with a step of 31 mV and a default comp code of 0x19. The output of the comparator is the IRQ pin. Its polarity can be changed using Register 0x0E bit 0. If IRQ_polarity = 0 → Active low (default) is selected, then the output is low if V_{COMP} value is greater than the threshold level. The output is high if the V_{COMP} value is less than the threshold level. If IRQ_polarity = 1 → Active high is selected then the output is high if V_{COMP} value is greater than the threshold level. The output is low if the V_{COMP} value is less than the threshold level. There is some hysteresis when V_{COMP} transitions from high to low, typically 60 mV. There is a control bit in register 0x0B, comparator control, that can double the hysteresis value.

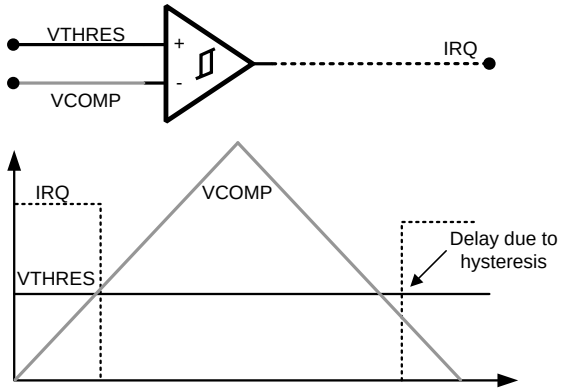

Figure 22.

8.4 Programming

8.4.1 SPI Data Interface

The device is programmable via 4-wire SPI Interface. The signals associated with this interface are CS, DI, DO and CLK. Through this interface, the user can enable/disable the device, program the output voltages of the individual bucks and of course read the status of Flag registers.

By accessing the registers in the device through this interface, the user can get access and control the operation of the buck controllers and program the reference voltage of the comparator in the device.

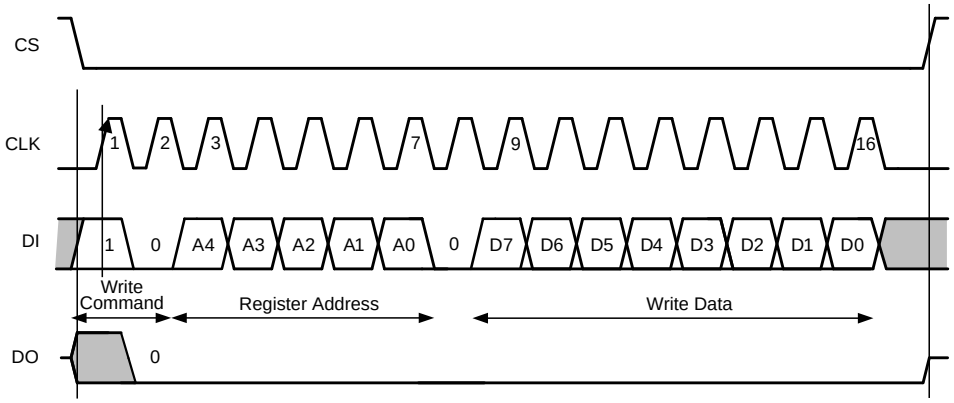

Figure 23. SPI Interface Write

- Data In (DI)
  - 1 to 0 Write Command

Copyright © 2011–2014, Texas Instruments Incorporated

Programming (continued)

  - $A_4$to A_0 Register address to be written
  - D_7 to D_0 Data to be written
- Data Out (DO)
  - All Os

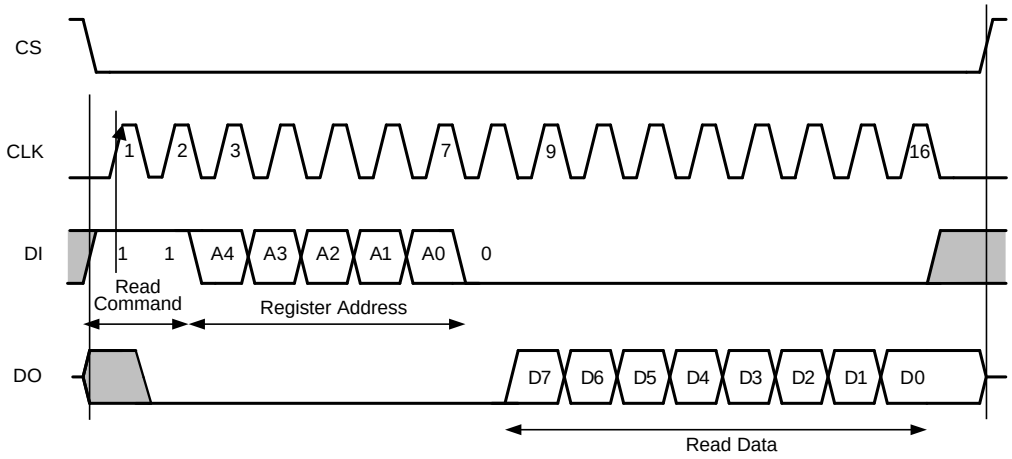

Figure 24. SPI Interface Read

- Data In (DI)
  - 1 to 1 Read Command
  - $A_4$to A_0 Register address to be read
- Data Out (DO)
  - D_7 to D_0 Data Read

8.4.1.1 Registers Configurable via the SPI Interface

ADDR	REG NAME	BIT	R/W	DEFAULT	DESCRIPTION	NOTES
0x00	Buck 3 Voltage	7	—	See Notes		Reset default:
		6	R/W		Buck 3 Voltage Code[6]	HL_B3 = 1 → 0x64 (1.2 V)
		5	R/W		Buck 3 Voltage Code[5]	HL_B3 = 0 → 0x3C (1 V)
		4	R/W		Buck 3 Voltage Code[4]	
		3	R/W		Buck 3 Voltage Code[3]	Range: 0.7 V to 1.335 V
		2	R/W		Buck 3 Voltage Code[2]	
		1	R/W		Buck 3 Voltage Code[1]	
		0	R/W		Buck 3 Voltage Code[0]	
0x07	Buck 1 Voltage	7	—	See Notes		Reset default:
		6	—			0x26 (3 V)
		5	R/W		Buck 1 Voltage Code[5]	
		4	R/W		Buck 1 Voltage Code[4]	Range: 1.1 V to 3.6 V
		3	R/W		Buck 1 Voltage Code[3]	
		2	R/W		Buck 1 Voltage Code[2]	
		1	R/W		Buck 1 Voltage Code[1]	
		0	R/W		Buck 1 Voltage Code[0]	

Copyright © 2011–2014, Texas Instruments Incorporated

Programming (continued)

ADDR	REG NAME	BIT	R/W	DEFAULT	DESCRIPTION	NOTES
0x08	Buck 2 Voltage	7	—	See Notes		Reset default:
		6	—			HL_B2 = 1 → 0x26 (3 V)/ 0x12 (2 V for LM10506−A)
		5	R/W		Buck 2 Voltage Code[5]	HL_B2 = 0 → 0x0E (1.8 V)
		4	R/W		Buck 2 Voltage Code[4]	
		3	R/W		Buck 2 Voltage Code[3]	Range: 1.1 V to 3.6 V
		2	R/W		Buck 2 Voltage Code[2]	
		1	R/W		Buck 2 Voltage Code[1]	
		0	R/W		Buck 2 Voltage Code[0]	
0x09	Standby Mode Voltage for Buck 3	7	R/W	See Notes		Reset default:
		6	R/W		Buck 3 Voltage Code[6]	HL_B3 = 1 → 0x53 (1.115 V)
		5	R/W		Buck 3 Voltage Code[5]	HL_B3 = 0 → 0x2E (0.93 V)
		4	R/W		Buck 3 Voltage Code[4]	
		3	R/W		Buck 3 Voltage Code[3]	
		2	R/W		Buck 3 Voltage Code[2]	
		1	R/W		Buck 3 Voltage Code[1]	
		0	R/W		Buck 3 Voltage Code[0]	
0x0A	Buck Control	7	R	1	BK3EN	Reads Buck 3 enable status
		6	—			
		5	—			
		4	R/W	0	BK1FPWM	Buck 1 forced PWM mode when high
		3	R/W	0	BK2FPWM	Buck 2 forced PWM mode when high
		2	R/W	0	BK3FPWM	Buck 3 forced PWM mode when high
		1	R/W	1	BK1EN	Enables Buck 1 0-disabled, 1-enabled
		0	R/W	1	BK2EN	Enables Buck 2 0-disabled, 1-enabled
0x0B	Comparator Control	7	R/W	0	Comp_hyst[0]	Doubles Comparator hysteresis
		6	R/W	0	Comp_thres[5]	Programmable range of 2 V to 4 V, step size = 31.75 mV
		5	R/W	1	Comp_thres[4]	Comparator Threshold reset default: 0x19
		4	R/W	1	Comp_thres[3]	
		3	R/W	0	Comp_thres[2]	Comp_hyst = 1 → min 80 mV hysteresis
		2	R/W	0	Comp_thres[1]	Comp_hyst = 0 → min 40 mV hysteresis
		1	R/W	1	Comp_thres[0]	
		0	R/W	1	COMPEN	Comparator enable
0x0C	Interrupt Enable	7	—			
		6	—			
		5	—			
		4	R/W	0	LDO OK	
		3	R/W	0	Buck 3 OK	
		2	R/W	0	Buck 2 OK	
		1	R/W	0	Buck 1 OK	
		0	R/W	1	Comparator	Interrupt comp event

Copyright © 2011–2014, Texas Instruments Incorporated

Programming (continued)

ADDR	REG NAME	BIT	R/W	DEFAULT	DESCRIPTION	NOTES
0x0D	Interrupt Status	7	—			
		6	—			
		5	—			
		4	R		LDO OK	LDO is greater than 90% of target
		3	R		Buck 3 OK	Buck 3 is greater than 90% of target
		2	R		Buck 2 OK	Buck 2 is greater than 90% of target
		1	R		Buck 1 OK	Buck 1 is greater than 90% of target
		0	R		Comparator	Comparator output is high
0x0E	MISC Control	7	—			
		6	—			
		5	—			
		4	—			
		3	—			
		2	—			
		1	R/W	0	LDO Sleep Mode	LDO goes into extra power save mode
		0	R/W	0	IRQ Polarity	IRQ_polarity = 0→Active low IRQ IRQ_polarity = 1→Active high IRQ

8.4.1.1.1 ADDR 0x07& 0x08: Buck 1 And Buck 2 Voltage Code And V_{OUT} Level Mapping

VOLTAGE CODE	VOLTAGE (V)	VOLTAGE CODE	VOLTAGE (V)
0x00	1.10	0x20	2.70
0x01	1.15	0x21	2.75
0x02	1.20	0x22	2.80
0x03	1.25	0x23	2.85
0x04	1.30	0x24	2.90
0x05	1.35	0x25	2.95
0x06	1.40	0x26	3.00
0x07	1.45	0x27	3.05
0x08	1.50	0x28	3.10
0x09	1.55	0x29	3.15
0x0A	1.60	0x2A	3.20
0x0B	1.65	0x2B	3.25
0x0C	1.70	0x2C	3.30
0x0D	1.75	0x2D	3.35
0x0E	1.80	0x2E	3.40
0x0F	1.85	0x2F	3.45
0x10	1.90	0x30	3.50
0x11	1.95	0x31	3.55
0x12	2.00	0x32	3.60
0x13	2.05	0x33	3.60
0x14	2.10	0x34	3.60
0x15	2.15	0x35	3.60
0x16	2.20	0x36	3.60
0x17	2.25	0x37	3.60
0x18	2.30	0x38	3.60
0x19	2.35	0x39	3.60
0x1A	2.40	0x3A	3.60

Copyright © 2011–2014, Texas Instruments Incorporated

VOLTAGE CODE	VOLTAGE (V)	VOLTAGE CODE	VOLTAGE (V)
0x1B	2.45	0x3B	3.60
0x1C	2.50	0x3C	3.60
0x1D	2.55	0x3D	3.60
0x1E	2.60	0x3E	3.60
0x1F	2.65	0x3F	3.60

8.4.1.1.2 ADDR 0x00 & 0x09: Buck 3 Voltage Code And V_{OUT} Level Mapping

VOLTAGE CODE	VOLTAGE (V)	VOLTAGE CODE (V)	VOLTAGE (V)	VOLTAGE CODE	VOLTAGE (V)	VOLTAGE CODE	VOLTAGE (V)
0x00	0.700	0x20	0.860	0x40	1.020	0x60	1.180
0x01	0.705	0x21	0.865	0x41	1.025	0x61	1.185
0x02	0.710	0x22	0.870	0x42	1.030	0x62	1.190
0x03	0.715	0x23	0.875	0x43	1.035	0x63	1.195
0x04	0.720	0x24	0.880	0x44	1.040	0x64	1.200
0x05	0.725	0x25	0.885	0x45	1.045	0x65	1.205
0x06	0.730	0x26	0.890	0x46	1.050	0x66	1.210
0x07	0.735	0x27	0.895	0x47	1.055	0x67	1.215
0x08	0.740	0x28	0.900	0x48	1.060	0x68	1.220
0x09	0.745	0x29	0.905	0x49	1.065	0x69	1.225
0x0A	0.750	0x2A	0.910	0x4A	1.070	0x6A	1.230
0x0B	0.755	0x2B	0.915	0x4B	1.075	0x6B	1.235
0x0C	0.760	0x2C	0.920	0x4C	1.080	0x6C	1.240
0x0D	0.765	0x2D	0.925	0x4D	1.085	0x6D	1.245
0x0E	0.770	0x2E	0.930	0x4E	1.090	0x6E	1.250
0x0F	0.775	0x2F	0.935	0x4F	1.095	0x6F	1.255
0x10	0.780	0x30	0.940	0x50	1.100	0x70	1.260
0x11	0.785	0x31	0.945	0x51	1.105	0x71	1.265
0x12	0.790	0x32	0.950	0x52	1.110	0x72	1.270
0x13	0.795	0x33	0.955	0x53	1.115	0x73	1.275
0x14	0.800	0x34	0.960	0x54	1.120	0x74	1.280
0x15	0.805	0x35	0.965	0x55	1.125	0x75	1.285
0x16	0.810	0x36	0.970	0x56	1.130	0x76	1.290
0x17	0.815	0x37	0.975	0x57	1.135	0x77	1.295
0x18	0.820	0x38	0.980	0x58	1.140	0x78	1.300
0x19	0.825	0x39	0.985	0x59	1.145	0x79	1.305
0x1A	0.830	0x3A	0.990	0x5A	1.150	0x7A	1.310
0x1B	0.835	0x3B	0.995	0x5B	1.155	0x7B	1.315
0x1C	0.840	0x3C	1.000	0x5C	1.160	0x7C	1.320
0x1D	0.845	0x3D	1.005	0x5D	1.165	0x7D	1.325
0x1E	0.850	0x3E	1.010	0x5E	1.170	0x7E	1.330
0x1F	0.855	0x3F	1.015	0x5F	1.175	0x7F	1.335

Copyright © 2011–2014, Texas Instruments Incorporated

8.4.1.1.3 ADDR0x0B: Comparator Threshold Mapping

VOLTAGE CODE	VOLTAGE (V)	VOLTAGE CODE	VOLTAGE (V)
0x00	2.000	0x20	3.016
0x01	2.032	0x21	3.048
0x02	2.064	0x22	3.080
0x03	2.095	0x23	3.111
0x04	2.127	0x24	3.143
0x05	2.159	0x25	3.175
0x06	2.191	0x26	3.207
0x07	2.222	0x27	3.238
0x08	2.254	0x28	3.270
0x09	2.286	0x29	3.302
0x0A	2.318	0x2A	3.334
0x0B	2.349	0x2B	3.365
0x0C	2.381	0x2C	3.397
0x0D	2.413	0x2D	3.429
0x0E	2.445	0x2E	3.461
0x0F	2.476	0x2F	3.492
0x10	2.508	0x30	3.524
0x11	2.540	0x31	3.556
0x12	2.572	0x32	3.588
0x13	2.603	0x33	3.619
0x14	2.635	0x34	3.651
0x15	2.667	0x35	3.683
0x16	2.699	0x36	3.715
0x17	2.730	0x37	3.746
0x18	2.762	0x38	3.778
0x19	2.794	0x39	3.810
0x1A	2.826	0x3A	3.842
0x1B	2.857	0x3B	3.873
0x1C	2.889	0x3C	3.905
0x1D	2.921	0x3D	3.937
0x1E	2.953	0x3E	3.969
0x1F	2.984	0x3F	4.000

Copyright © 2011–2014, Texas Instruments Incorporated

9 Application and Implementation

9.1 Application Information

The LM10506 device provides 4 regulated outputs from 3 step-down switching regulators and one linear regulator. The regulated outputs are achieved using a minimum of external components. To support low load conditions within an application the device may be placed in a low power mode - STANDBY.

A 4-wire SPI interface may be used to reconfigure the device outputs and return an indication of output status. A separate device output provides an Interrupt signal when the device status changes. All programmed settings may be returned to default state via a RESET input.

9.2 Typical Application

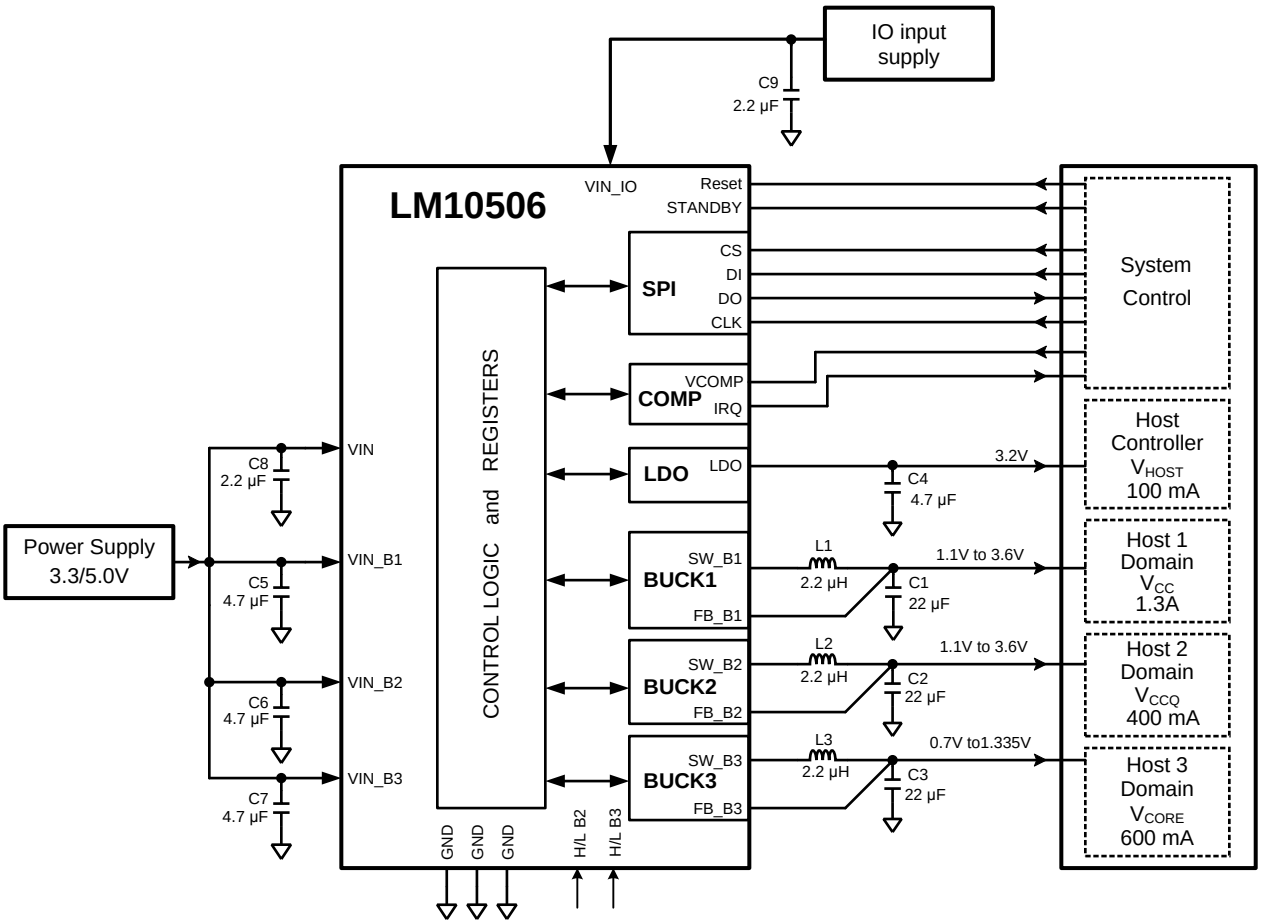

Figure 25. LM10506 Typical Application

Copyright © 2011–2014, Texas Instruments Incorporated

Typical Application (continued)

9.2.1 Design Requirements

Table 2. Output Voltage Configurations for LM10506

REGULATOR	V_{OUT} if H/L=HIGH (B2, B3)	V_{OUT} if H/L=LOW (B2, B3)	V_{OUT} if STANDBY=HIGH (STANDBY MODE)	V_{OUT}	MAXIMUM OUTPUT CURRENT	TYPICAL APPLICATION	COMMENTS
Buck 1(1)	3 V	3 V	Off	1.1 V to 3.6 V; 50-mV steps	1.3 A	V_{CC}	Flash
Buck 2(1)	3 V	1.8 V	Off	1.1 V to 3.6 V; 50-mV steps	400 mA	V_{CCQ}	Interface
Buck 3(1)	1.2 V	1 V	V_{NOM} - 7%	0.7 V to 1.335 V; 5-mV steps	600 mA	V_{CORE}	Core
LDO	3.2 V	3.2 V	3.2 V	N/A	100 mA	V_{HOST} controller	Reference for Digital

(1) Default voltage values are determined when working in PWM mode. Voltage may be 0.8-1.6% higher when in PFM mode.

Table 3. Output Voltage Configurations for LM10506-A

REGULATOR	V_{OUT} if H/L=HIGH (B2, B3)	V_{OUT} if H/L=LOW (B2, B3)	V_{OUT} if STANDBY=HIGH (STANDBY MODE)	V_{OUT}	MAXIMUM OUTPUT CURRENT	TYPICAL APPLICATION	COMMENTS
Buck 1(1)	3 V	3 V	Off	1.1 V to 3.6 V; 50-mV steps	1.3 A	V_{CC}	Flash
Buck 2(1)	2 V	1.8 V	Off	1.1 V to 3.6 V; 50-mV steps	400 mA	V_{CCQ}	Interface
Buck 3(1)	1.2 V	1 V	V_{NOM} - 7%	0.7 V to 1.335 V; 5-mV steps	600 mA	V_{CORE}	Core
LDO	3.2 V	3.2 V	3.2 V	N/A	100 mA	V_{HOST} controller	Reference for Digital

(1) Default voltage values are determined when working in PWM mode. Voltage may be 0.8-1.6% higher when in PFM mode.

9.2.2 Detailed Design Procedure

9.2.2.1 Input Voltage

VIN, VIN_B1, VIN_B2, and VIN_B3 must all be connected to the same power source.

9.2.2.2 Standby Mode

Ensure that the device is in a low power mode before entering Standby and throughout the Standby phase. In Standby mode the device is in a low power mode in which all internal clocks are turned off to conserve power and Buck 3 will only operate in PFM mode. While limited to PFM mode the loading on Buck 3 should be kept below 80 mA (typ.) to remain below the PFM/PWM threshold and avoid device shutdown.

9.2.2.3 External Components Selection

All three switchers require an input capacitor and an output inductor-capacitor filter. These components are critical to the performance of the device. All three switchers are internally compensated and do not require external components to achieve stable operation. The output voltages of the bucks can be programmed through the SPI pins.

9.2.2.3.1 Output Inductors & Capacitors Selection

There are several design considerations related to the selection of output inductors and capacitors:

- Load transient response
- Stability
- Efficiency
- Output ripple voltage
- Overcurrent ruggedness

Copyright © 2011–2014, Texas Instruments Incorporated

The device has been optimized for use with nominal LC values as shown in the Typical Application Circuit.

9.2.2.3.2 Inductor Selection

The recommended inductor values are shown in Typical Application Diagram. It is important to ensure the inductor core does not saturate during any foreseeable operational situation. The inductor should be rated to handle the peak load current plus the ripple current:

Care should be taken when reviewing the different saturation current ratings that are specified by different manufacturers. Saturation current ratings are typically specified at 25°C, so ratings at maximum ambient temperature of the application should be requested from the manufacturer.

$$I_{L(MAX)} = I_{LOAD(MAX)} + \Delta I_{RIPPLE}$$

$$= I_{LOAD(MAX)} + \frac{D \times (V_{IN} - V_{OUT})}{2 \times L \times F_S}$$

$$\approx I_{LOAD(MAX)} + \frac{D \times (V_{IN} - V_{OUT})}{2 \times 2.2 \times 2.0} \text{ (A typ.),}$$

$$D = \frac{V_{OUT}}{V_{IN}}, F_S = 2 \text{ MHz}, L = 2.2 \mu H \quad (1)$$

There are two methods to choose the inductor saturation current rating:

9.2.2.3.2.1 Recommended Method For Inductor Selection:

The best way to ensure the inductor does not saturate is to choose an inductor that has saturation current rating greater than the maximum device current limit, as specified in the *Electrical Characteristics* tables. In this case the device will prevent inductor saturation by going into current limit before the saturation level is reached.

9.2.2.3.2.2 Alternate Method For Inductor Selection:

If the recommended approach cannot be used care must be taken to ensure that the saturation current is greater than the peak inductor current:

$$I_{SAT} > IL_{PEAK}$$

$$IL_{PEAK} = I_{OUTMAX} + \frac{I_{RIPPLE}}{2}$$

$$I_{RIPPLE} = \frac{D \times (V_{IN} - V_{OUT})}{L \times F_S}$$

$$D = \frac{V_{OUT}}{V_{IN} \times EFF} \quad (2)$$

- I_{SAT}: Inductor saturation current at operating temperature
- I_{LPEAK}: Peak inductor current during worst case conditions
- I_{OUTMAX}: Maximum average inductor current
- I_{RIPPLE}: Peak-to-Peak inductor current
- V_{OUT}: Output voltage
- V_{IN}: Input voltage
- L: Inductor value in Henries at I_{OUTMAX}
- F: Switching frequency, Hertz
- D: Estimated duty factor
- EFF: Estimated power supply efficiency

I_{SAT} may not be exceeded during any operation, including transients, startup, high temperature, worst-case conditions, etc.

Copyright © 2011–2014, Texas Instruments Incorporated

9.2.2.3.2.2.1 Suggested Inductors and Their Suppliers

The designer should choose the inductors that best match the system requirements. A very wide range of inductors are available as regarding physical size, height, maximum current (thermally limited, and inductance loss limited), series resistance, maximum operating frequency, losses, etc. In general, smaller physical size inductors will have higher series resistance (DCR) and implicitly lower overall efficiency is achieved. Very low-profile inductors may have even higher series resistance. The designer should try to find the best compromise between system performance and cost.

Table 4. Recommended Inductors

VALUE (µH)	MANUFACTURER	PART NUMBER	DCR (mΩ)	CURRENT (A)	PACKAGE
2.2	Murata	LQH55PN2R2NR0L	31	2.5	2220
2.2	TDK	NLC565050T-2R2K-PF	60	1.3	2220
2.2	Murata	LQM2MPN2R2NG0	110	1.2	806
2.2	Coilcraft	LPS3015-222MLB	110	2.0	3015
2.2	Vishay	IFSC-1008AB-ER-2R2	90	2.15	2520

9.2.2.3.2.3 Output And Input Capacitors Characteristics

Special attention should be paid when selecting these components. As shown in Figure 26, the DC bias of these capacitors can result in a capacitance value that falls below the minimum value given in the recommended capacitor specifications table. Note that the graph shows the capacitance out of spec for the 0402 case size capacitor at higher bias voltages. It is therefore recommended that the capacitor manufacturers' specifications for the nominal value capacitor are consulted for all conditions, as some capacitor sizes (for example, 0402) may not be suitable in the actual application.

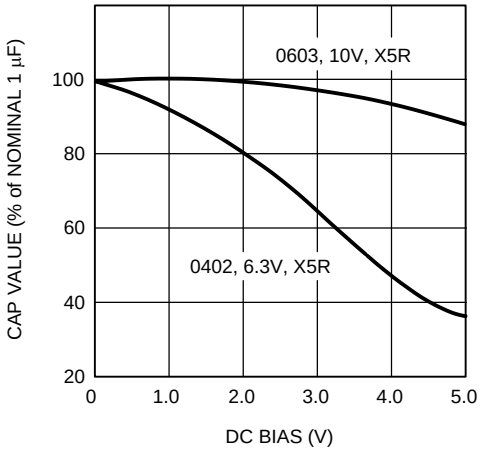

Figure 26. Typical Variation In Capacitance vs. DC Bias

The ceramic capacitor's capacitance can vary with temperature. The capacitor type X7R, which operates over a temperature range of −55°C to 125°C, will only vary the capacitance to within ±15%. The capacitor type X5R has a similar tolerance over a reduced temperature range of −55°C to 85°C. Many large value ceramic capacitors, larger than 1 µF are manufactured with Z5U or Y5V temperature characteristics. Their capacitance can drop by more than 50% as the temperature varies from 25°C to 85°C. Therefore X7R is recommended over Z5U and Y5V in applications where the ambient temperature will change significantly above or below 25°C.

Tantalum capacitors are less desirable than ceramic for use as output capacitors because they are more expensive when comparing equivalent capacitance and voltage ratings in the 0.47 µF to 44 µF range. Another important consideration is that tantalum capacitors have higher ESR values than equivalent size ceramics. This means that while it may be possible to find a tantalum capacitor with an ESR value within the stable range, it would have to be larger in capacitance (which means bigger and more costly) than a ceramic capacitor with the same ESR value. It should also be noted that the ESR of a typical tantalum will increase about 2:1 as the temperature goes from 25°C down to −40°C, so some guard band must be allowed.

Copyright © 2011–2014, Texas Instruments Incorporated

9.2.2.3.2.3.1 Output Capacitor Selection

The output capacitor of a switching converter absorbs the AC ripple current from the inductor and provides the initial response to a load transient. The ripple voltage at the output of the converter is the product of the ripple current flowing through the output capacitor and the impedance of the capacitor. The impedance of the capacitor can be dominated by capacitive, resistive, or inductive elements within the capacitor, depending on the frequency of the ripple current. Ceramic capacitors have very low ESR and remain capacitive up to high frequencies. Their inductive component can usually be neglected at the frequency ranges at which the switcher operates.

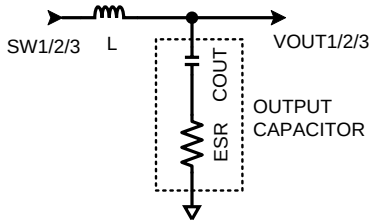

The output-filter capacitor smooths out the current flow from the inductor to the load and helps maintain a steady output voltage during transient load changes. It also reduces output voltage ripple. These capacitors must be selected with sufficient capacitance and low enough ESR to perform these functions.

Note that the output voltage ripple increases with the inductor current ripple and the Equivalent Series Resistance of the output capacitor (ESR_{COUT}). Also note that the actual value of the capacitor's ESR_{COUT} is frequency and temperature dependent, as specified by its manufacturer. The ESR should be calculated at the applicable switching frequency and ambient temperature.

$$V_{OUT\text{-}RIPPLE\text{-}PP} = \frac{\Delta I_{RIPPLE}}{8 \times F_S \times C_{OUT}} \text{ where } \Delta I_{RIPPLE} = \frac{D \times (V_{IN} - V_{OUT})}{2 \times L \times F_S} \text{ and } D = \frac{V_{OUT}}{V_{IN}} \quad (3)$$

Output ripple can be estimated from the vector sum of the reactive (capacitance) voltage component and the real (ESR) voltage component of the output capacitor where:

$$V_{OUT\text{-}RIPPLE\text{-}PP} = \sqrt{V^2_{ROUT} + V^2_{COUT}} \quad (4)$$

where:

$$V_{ROUT} = I_{RIPPLE} \times ESR_{COUT} \text{ and } V_{COUT} = \frac{I_{RIPPLE}}{8 \times F_S \times C_{OUT}}$$

- $V_{OUT\text{-}RIPPLE\text{-}PP}$: estimated output ripple,
- V_{ROUT}: estimated real output ripple,
- V_{COUT}: estimated reactive output ripple. (5)

The device is designed to be used with ceramic capacitors on the outputs of the buck regulators. The recommended dielectric type of these capacitors is X5R, X7R, or of comparable material to maintain proper tolerances over voltage and temperature. The recommended value for the output capacitors is 22 µF, 6.3V with an ESR of 2 mΩ or less. The output capacitors need to be mounted as close as possible to the output/ground pins of the device.

Table 5. Recommended Output Capacitors

MODEL	TYPE	VENDOR	VOLTAGE RATING (V)	CASE SIZE
08056D226MAT2A	Ceramic, X5R	AVX Corporation	6.3	0805, (2012)
C0805L226M9PACTU	Ceramic, X5R	Kemet	6.3	0805, (2012)
ECJ-2FB0J226M	Ceramic, X5R	Panasonic - ECG	6.3	0805, (2012)
JMK212BJ226MG-T	Ceramic, X5R	Taiyo Yuden	6.3	0603, (1608)
C2012X5R0J226M	Ceramic, X5R	TDK Corporation	6.3	0603, (1608)

Copyright © 2011–2014, Texas Instruments Incorporated

9.2.2.3.2.3.2 Input Capacitor Selection

There are 3 buck regulators in the LM10506 device. Each of these buck regulators has its own input capacitor which should be located as close as possible to their corresponding SWx_VIN and SWx_GND pins, where x designates Buck 1, 2, or 3. The 3 buck regulators operate at 120° out of phase, which means that they switch on at equally spaced intervals, in order to reduce the input power rail ripple. It is recommended to connect all the supply/ground pins of the buck regulators, SWx_VIN to two solid internal planes located under the device. In this way, the 3 input capacitors work together and further reduce the input current ripple. A larger tantalum capacitor can also be located in the proximity of the device.

The input capacitor supplies the AC switching current drawn from the switching action of the internal power FETs. The input current of a buck converter is discontinuous, so the ripple current supplied by the input capacitor is large. The input capacitor must be rated to handle both the RMS current and the dissipated power.

The input capacitor must be rated to handle this current:

$$I_{RMS_CIN} = I_{OUT} \frac{\sqrt{V_{OUT} (V_{IN} - V_{OUT})}}{V_{IN}} \quad (6)$$

The power dissipated in the input capacitor is given by:

$$P_{D_CIN} = I^2_{RMS_CIN} \times R_{ESR_CIN} \quad (7)$$

The device is designed to be used with ceramic capacitors on the inputs of the buck regulators. The recommended dielectric type of these capacitors is X5R, X7R, or of comparable material to maintain proper tolerances over voltage and temperature. The minimum recommended value for the input capacitor is 10 µF with an ESR of 10 mΩ or less. The input capacitors need to be mounted as close as possible to the power/ground input pins of the device.

The input power source supplies the average current continuously. During the PFET switch on-time, however, the demanded di/dt is higher than can be typically supplied by the input power source. This delta is supplied by the input capacitor.

A simplified “worst case” assumption is that all of the PFET current is supplied by the input capacitor. This will result in conservative estimates of input ripple voltage and capacitor RMS current.

Input ripple voltage is estimated as follows:

$$V_{PPIN} = \frac{I_{OUT} \times D}{C_{IN} \times F_S} + I_{OUT} \times ESR_{CIN}$$

where

- V_{PPIN}: estimated peak-to-peak input ripple voltage,
- I_{OUT}: Output Current
- C_{IN}: Input capacitor value
- ESR_{CIN}: input capacitor ESR. (8)

This capacitor is exposed to significant RMS current, so it is important to select a capacitor with an adequate RMS current rating. Capacitor RMS current estimated as follows:

$$I_{RMSCIN} = \sqrt{D \times \left(I^2_{OUT} + \frac{I^2_{RIPPLE}}{12} \right)}$$

- I_{RMSCIN}: estimated input capacitor RMS current. (9)

9.2.2.4 Recommendations For Unused Functions And Pins

If any function is not used in the end application then the following recommendations for tying-off the associated pins on the circuit boards should be used.

FUNCTION	PIN	IF UNUSED
BUCK1	VIN_B1	Connect to VIN
	SW_B1	Connect to VIN
	FB_B1	Connect to GND

Copyright © 2011–2014, Texas Instruments Incorporated

FUNCTION	PIN	IF UNUSED
BUCK2	VIN_B2	Connect to VIN
	SW_B2	Connect to VIN
	FB_B2	Connect to GND
BUCK3	VIN_B3	Connect to VIN
	SW_B3	Connect to VIN
	FB_B3	Connect to GND
SPI	SPI_CS	Connect to VIN_IO
	SPI_DI	Connect to GND
	SPI_DO	Connect to GND
	SPI_CK	Connect to GND
HL_B2		Connect to GND
HL_B3		Connect to VIN
STANDBY		Connect to GND
RESET		Connect to VIN_IO
COMPARATOR	VCOMP	Connect to VIN
	IRQ	Leave open

9.2.3 Application Curves

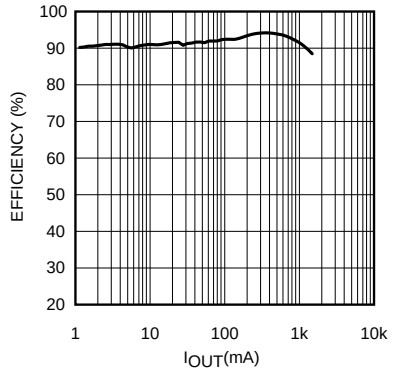

V_{IN} = 5 V V_{OUT} = 3 V

Figure 27. Efficiency Of Buck 1

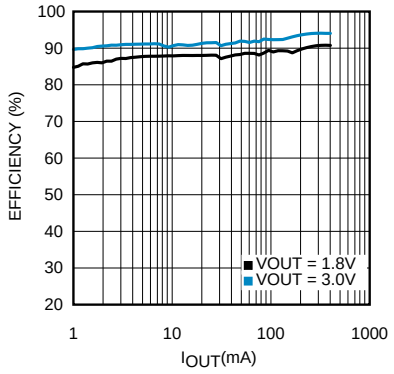

V_{IN} = 5 V V_{OUT} = 1.8 V and 3 V

Figure 28. Efficiency Of Buck 2

Copyright © 2011–2014, Texas Instruments Incorporated

10 Power Supply Recommendations

The device is designed to operate from a fixed input voltage supply at 3.3 V or 5 V but will operate at input voltages between 3 V to 5.5 V.

11 Layout

11.1 Layout Guidelines

11.1.1 PCB Layout Considerations

PC board layout is an important part of DC-DC converter design. Poor board layout can disrupt the performance of a DC-DC converter and surrounding circuitry by contributing to EMI, ground bounce, and resistive voltage loss in the traces. These can send erroneous signals to the DC-DC converter resulting in poor regulation or instability. Good layout can be implemented by following a few simple design rules.

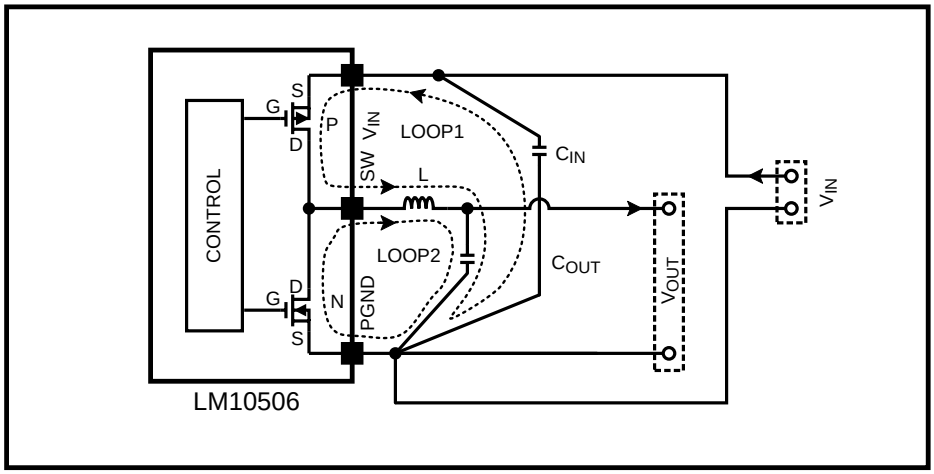

Schematic Of LM10506 Highlighting Layout Sensitive Nodes

1. Minimize area of switched current loops. In a buck regulator there are two loops where currents are switched rapidly. The first loop starts from the C_{IN} input capacitor, to the regulator SWx_VIN pin, to the regulator SW pin, to the inductor then out to the output capacitor C_{OUT} and load. The second loop starts from the output capacitor ground, to the regulator SWx_GND pins, to the inductor and then out to C_{OUT} and the load (see above). To minimize both loop areas the input capacitor should be placed as close as possible to the VIN pin. Grounding for both the input and output capacitors should consist of a small localized top side plane that connects to PGND. The inductor should be placed as close as possible to the SW pin and output capacitor.
2. Minimize the copper area of the switch node. The SW pins should be directly connected with a trace that runs on top side directly to the inductor. To minimize IR losses this trace should be as short as possible and with a sufficient width. However, a trace that is wider than 100 mils will increase the copper area and cause too much capacitive loading on the SW pin. The inductors should be placed as close as possible to the SW pins to further minimize the copper area of the switch node.
3. Have a single point ground for all device analog grounds. The ground connections for the feedback components should be connected together then routed to the GND pin of the device. This prevents any switched or load currents from flowing in the analog ground plane. If not properly handled, poor grounding can result in degraded load regulation or erratic switching behavior.
4. Minimize trace length to the FB pin. The feedback trace should be routed away from the SW pin and inductor to avoid contaminating the feedback signal with switch noise.
5. Make input and output bus connections as wide as possible. This reduces any voltage drops on the input or output of the converter and can improve efficiency. If voltage accuracy at the load is important make sure feedback voltage sense is made at the load. Doing so will correct for voltage drops at the load and provide the best output accuracy.

Outside 7x7 array 0.4 mm 34-bump DSBGA, with 24 peripheral and 6 inner vias = 30 individual signals

Copyright © 2011–2014, Texas Instruments Incorporated

Layout Guidelines (continued)

11.1.2 PCB Layout Thermal Dissipation For DSBGA Package

1. Position ground layer as close as possible to DSBGA package. Second PCB layer is usually good option. LM10506 evaluation board is a good example.
2. Draw power traces as wide as possible. Bumps which carry high currents should be connected to wide traces. This helps the silicon to cool down.

11.2 Layout Example

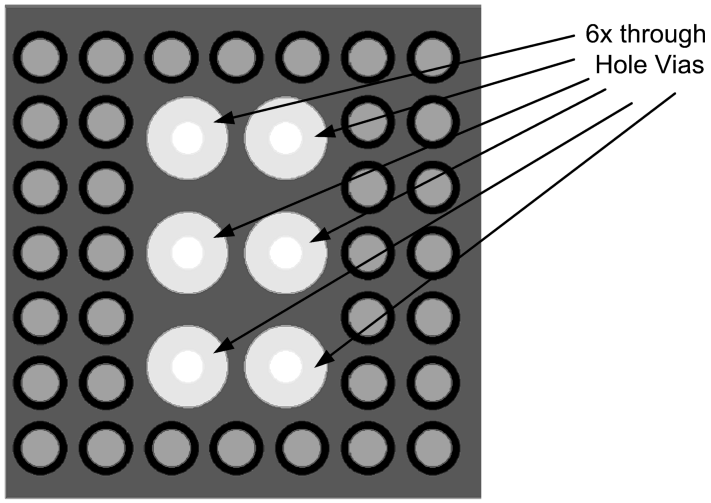

Figure 29. Possible PCB Layout Configuration
6x Through Hole Vias In The Middle

Copyright © 2011–2014, Texas Instruments Incorporated

12 Device and Documentation Support

12.1 Device Support

12.1.1 Third-Party Products Disclaimer

TI'S PUBLICATION OF INFORMATION REGARDING THIRD-PARTY PRODUCTS OR SERVICES DOES NOT CONSTITUTE AN ENDORSEMENT REGARDING THE SUITABILITY OF SUCH PRODUCTS OR SERVICES OR A WARRANTY, REPRESENTATION OR ENDORSEMENT OF SUCH PRODUCTS OR SERVICES, EITHER ALONE OR IN COMBINATION WITH ANY TI PRODUCT OR SERVICE.

12.2 Trademarks

SPI is a trademark of Motorola.
All other trademarks are the property of their respective owners.

12.3 Electrostatic Discharge Caution



This integrated circuit can be damaged by ESD. Texas Instruments recommends that all integrated circuits be handled with appropriate precautions. Failure to observe proper handling and installation procedures can cause damage.

ESD damage can range from subtle performance degradation to complete device failure. Precision integrated circuits may be more susceptible to damage because very small parametric changes could cause the device not to meet its published specifications.

12.4 Glossary

SLYZ022 — *TI Glossary*.

This glossary lists and explains terms, acronyms, and definitions.

13 Mechanical, Packaging, and Orderable Information

The following pages include mechanical, packaging, and orderable information. This information is the most current data available for the designated devices. This data is subject to change without notice and revision of this document. For browser-based versions of this data sheet, refer to the left-hand navigation.

Copyright © 2011–2014, Texas Instruments Incorporated

PACKAGING INFORMATION

Orderable Device	Status (1)	Package Type	Package Drawing	Pins	Package Qty	Eco Plan (2)	Lead/Ball Finish	MSL Peak Temp (3)	Op Temp (°C)	Device Marking (4/5)	Samples
LM10506TME-A/NOPB	ACTIVE	DSBGA	YFR	34	250	Green (RoHS & no Sb/Br)	SNAGCU	Level-1-260C-UNLIM	-40 to 85	V045	Samples
LM10506TME/NOPB	ACTIVE	DSBGA	YFR	34	250	Green (RoHS & no Sb/Br)	SNAGCU	Level-1-260C-UNLIM	-40 to 85	V037	Samples
LM10506TMX-A/NOPB	ACTIVE	DSBGA	YFR	34	3000	Green (RoHS & no Sb/Br)	SNAGCU	Level-1-260C-UNLIM	-40 to 85	V045	Samples
LM10506TMX/NOPB	ACTIVE	DSBGA	YFR	34	3000	Green (RoHS & no Sb/Br)	SNAGCU	Level-1-260C-UNLIM	-40 to 85	V037	Samples

(1) The marketing status values are defined as follows:
ACTIVE: Product device recommended for new designs.
LIFEBUY: TI has announced that the device will be discontinued, and a lifetime-buy period is in effect.
NRND: Not recommended for new designs. Device is in production to support existing customers, but TI does not recommend using this part in a new design.
PREVIEW: Device has been announced but is not in production. Samples may or may not be available.
OBSOLETE: TI has discontinued the production of the device.

(2) Eco Plan - The planned eco-friendly classification: Pb-Free (RoHS), Pb-Free (RoHS Exempt), or Green (RoHS & no Sb/Br) - please check http://www.ti.com/productcontent for the latest availability information and additional product content details.
TBD: The Pb-Free/Green conversion plan has not been defined.
Pb-Free (RoHS): TI's terms "Lead-Free" or "Pb-Free" mean semiconductor products that are compatible with the current RoHS requirements for all 6 substances, including the requirement that lead not exceed 0.1% by weight in homogeneous materials. Where designed to be soldered at high temperatures, TI Pb-Free products are suitable for use in specified lead-free processes.
Pb-Free (RoHS Exempt): This component has a RoHS exemption for either 1) lead-based flip-chip solder bumps used between the die and package, or 2) lead-based die adhesive used between the die and leadframe. The component is otherwise considered Pb-Free (RoHS compatible) as defined above.
Green (RoHS & no Sb/Br): TI defines "Green" to mean Pb-Free (RoHS compatible), and free of Bromine (Br) and Antimony (Sb) based flame retardants (Br or Sb do not exceed 0.1% by weight in homogeneous material)

(3) MSL, Peak Temp. -- The Moisture Sensitivity Level rating according to the JEDEC industry standard classifications, and peak solder temperature.

(4) There may be additional marking, which relates to the logo, the lot trace code information, or the environmental category on the device.

(5) Multiple Device Markings will be inside parentheses. Only one Device Marking contained in parentheses and separated by a "~" will appear on a device. If a line is indented then it is a continuation of the previous line and the two combined represent the entire Device Marking for that device.

Important Information and Disclaimer: The information provided on this page represents TI's knowledge and belief as of the date that it is provided. TI bases its knowledge and belief on information provided by third parties, and makes no representation or warranty as to the accuracy of such information. Efforts are underway to better integrate information from third parties. TI has taken and

continues to take reasonable steps to provide representative and accurate information but may not have conducted destructive testing or chemical analysis on incoming materials and chemicals.
TI and TI suppliers consider certain information to be proprietary, and thus CAS numbers and other limited information may not be available for release.

In no event shall TI's liability arising out of such information exceed the total purchase price of the TI part(s) at issue in this document sold by TI to Customer on an annual basis.

TAPE AND REEL INFORMATION

REEL DIMENSIONS

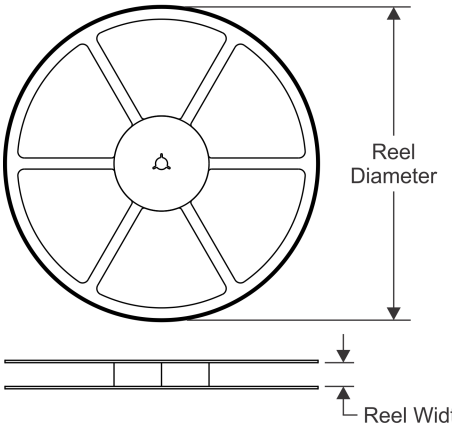

TAPE DIMENSIONS

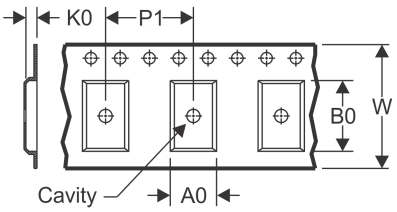

A0	Dimension designed to accommodate the component width
B0	Dimension designed to accommodate the component length
K0	Dimension designed to accommodate the component thickness
W	Overall width of the carrier tape
P1	Pitch between successive cavity centers

QUADRANT ASSIGNMENTS FOR PIN 1 ORIENTATION IN TAPE

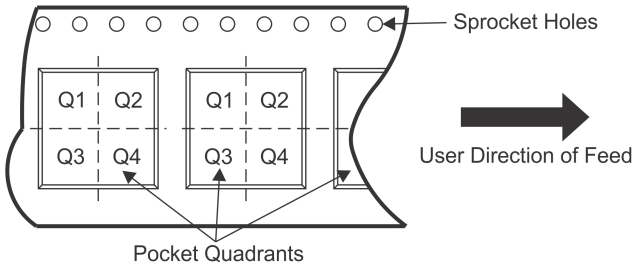

*All dimensions are nominal

Device	Package Type	Package Drawing	Pins	SPQ	Reel Diameter (mm)	Reel Width W1 (mm)	A0 (mm)	B0 (mm)	K0 (mm)	P1 (mm)	W (mm)	Pin1 Quadrant
LM10506TME-A/NOPB	DSBGA	YFR	34	250	178.0	8.4	3.02	3.02	0.76	4.0	8.0	Q1
LM10506TME/NOPB	DSBGA	YFR	34	250	178.0	8.4	3.02	3.02	0.76	4.0	8.0	Q1
LM10506TMX-A/NOPB	DSBGA	YFR	34	3000	178.0	8.4	3.02	3.02	0.76	4.0	8.0	Q1
LM10506TMX/NOPB	DSBGA	YFR	34	3000	178.0	8.4	3.02	3.02	0.76	4.0	8.0	Q1

TAPE AND REEL BOX DIMENSIONS

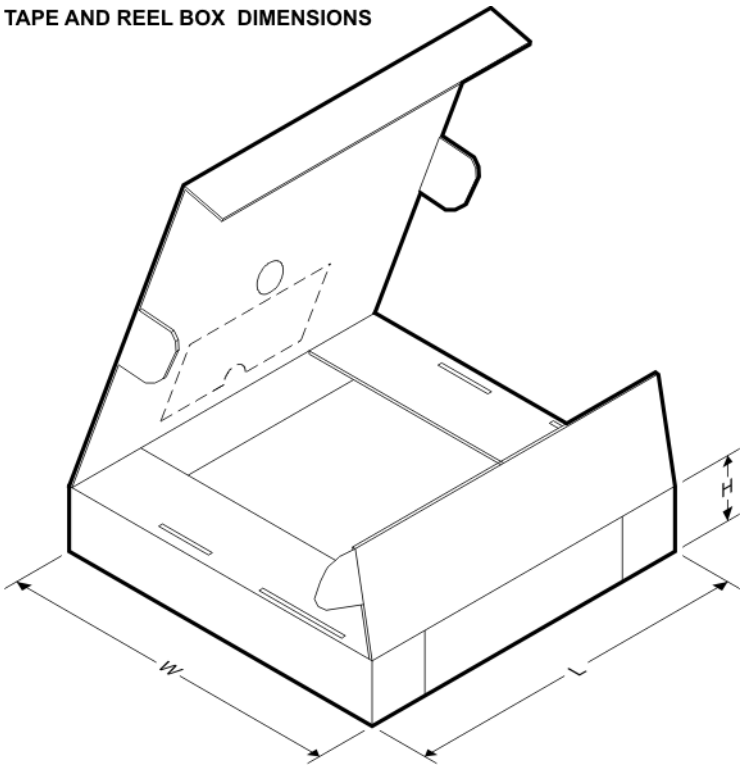

*All dimensions are nominal

Device	Package Type	Package Drawing	Pins	SPQ	Length (mm)	Width (mm)	Height (mm)
LM10506TME-A/NOPB	DSBGA	YFR	34	250	210.0	185.0	35.0
LM10506TME/NOPB	DSBGA	YFR	34	250	210.0	185.0	35.0
LM10506TMX-A/NOPB	DSBGA	YFR	34	3000	210.0	185.0	35.0
LM10506TMX/NOPB	DSBGA	YFR	34	3000	210.0	185.0	35.0

YFR0034

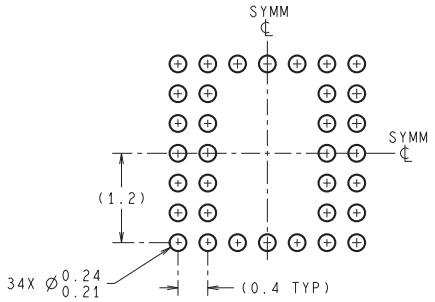

DIMENSIONS ARE IN MILLIMETERS
DIMENSIONS IN ( ) FOR REFERENCE ONLY

LAND PATTERN RECOMMENDATION

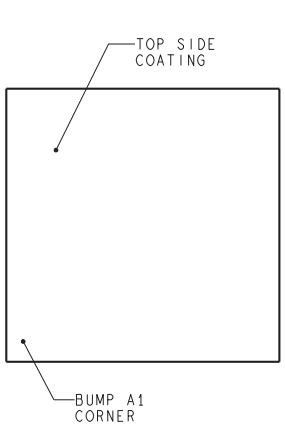

TOP SIDE OF PACKAGE

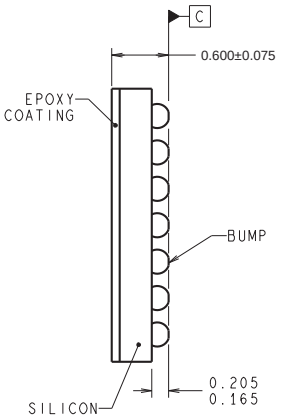

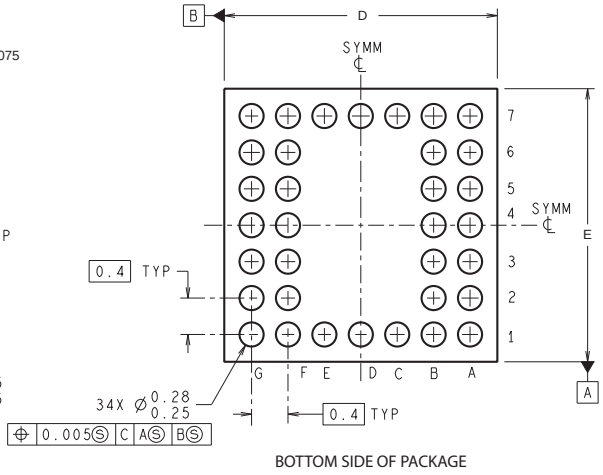

BOTTOM SIDE OF PACKAGE

TME34XXX (Rev B)

D: Max = 2.84 mm, Min = 2.78 mm

E: Max = 2.84 mm, Min = 2.78 mm

4215092/A 12/12

NOTES: A. All linear dimensions are in millimeters. Dimensioning and tolerancing per ASME Y14.5M-1994.
B. This drawing is subject to change without notice.

IMPORTANT NOTICE

Texas Instruments Incorporated and its subsidiaries (TI) reserve the right to make corrections, enhancements, improvements and other changes to its semiconductor products and services per JESD46, latest issue, and to discontinue any product or service per JESD48, latest issue. Buyers should obtain the latest relevant information before placing orders and should verify that such information is current and complete. All semiconductor products (also referred to herein as “components”) are sold subject to TI’s terms and conditions of sale supplied at the time of order acknowledgment.

TI warrants performance of its components to the specifications applicable at the time of sale, in accordance with the warranty in TI’s terms and conditions of sale of semiconductor products. Testing and other quality control techniques are used to the extent TI deems necessary to support this warranty. Except where mandated by applicable law, testing of all parameters of each component is not necessarily performed.

TI assumes no liability for applications assistance or the design of Buyers’ products. Buyers are responsible for their products and applications using TI components. To minimize the risks associated with Buyers’ products and applications, Buyers should provide adequate design and operating safeguards.

TI does not warrant or represent that any license, either express or implied, is granted under any patent right, copyright, mask work right, or other intellectual property right relating to any combination, machine, or process in which TI components or services are used. Information published by TI regarding third-party products or services does not constitute a license to use such products or services or a warranty or endorsement thereof. Use of such information may require a license from a third party under the patents or other intellectual property of the third party, or a license from TI under the patents or other intellectual property of TI.

Reproduction of significant portions of TI information in TI data books or data sheets is permissible only if reproduction is without alteration and is accompanied by all associated warranties, conditions, limitations, and notices. TI is not responsible or liable for such altered documentation. Information of third parties may be subject to additional restrictions.

Resale of TI components or services with statements different from or beyond the parameters stated by TI for that component or service voids all express and any implied warranties for the associated TI component or service and is an unfair and deceptive business practice. TI is not responsible or liable for any such statements.

Buyer acknowledges and agrees that it is solely responsible for compliance with all legal, regulatory and safety-related requirements concerning its products, and any use of TI components in its applications, notwithstanding any applications-related information or support that may be provided by TI. Buyer represents and agrees that it has all the necessary expertise to create and implement safeguards which anticipate dangerous consequences of failures, monitor failures and their consequences, lessen the likelihood of failures that might cause harm and take appropriate remedial actions. Buyer will fully indemnify TI and its representatives against any damages arising out of the use of any TI components in safety-critical applications.

In some cases, TI components may be promoted specifically to facilitate safety-related applications. With such components, TI’s goal is to help enable customers to design and create their own end-product solutions that meet applicable functional safety standards and requirements. Nonetheless, such components are subject to these terms.

No TI components are authorized for use in FDA Class III (or similar life-critical medical equipment) unless authorized officers of the parties have executed a special agreement specifically governing such use.

Only those TI components which TI has specifically designated as military grade or “enhanced plastic” are designed and intended for use in military/aerospace applications or environments. Buyer acknowledges and agrees that any military or aerospace use of TI components which have ***not*** been so designated is solely at the Buyer's risk, and that Buyer is solely responsible for compliance with all legal and regulatory requirements in connection with such use.

TI has specifically designated certain components as meeting ISO/TS16949 requirements, mainly for automotive use. In any case of use of non-designated products, TI will not be responsible for any failure to meet ISO/TS16949.

Products		**Applications**	
Audio	www.ti.com/audio	Automotive and Transportation	www.ti.com/automotive
Amplifiers	amplifier.ti.com	Communications and Telecom	www.ti.com/communications
Data Converters	dataconverter.ti.com	Computers and Peripherals	www.ti.com/computers
DLP® Products	www.dlp.com	Consumer Electronics	www.ti.com/consumer-apps
DSP	dsp.ti.com	Energy and Lighting	www.ti.com/energy
Clocks and Timers	www.ti.com/clocks	Industrial	www.ti.com/industrial
Interface	interface.ti.com	Medical	www.ti.com/medical
Logic	logic.ti.com	Security	www.ti.com/security
Power Mgmt	power.ti.com	Space, Avionics and Defense	www.ti.com/space-avionics-defense
Microcontrollers	microcontroller.ti.com	Video and Imaging	www.ti.com/video
RFID	www.ti-rfid.com		
OMAP Applications Processors	www.ti.com/omap	**TI E2E Community**	e2e.ti.com
Wireless Connectivity	www.ti.com/wirelessconnectivity		

Mailing Address: Texas Instruments, Post Office Box 655303, Dallas, Texas 75265
Copyright © 2015, Texas Instruments Incorporated