# LLZ2V0 – LLZ75

500mW Hermetically Sealed Glass Zener Voltage Regulators

**MINI MELF**



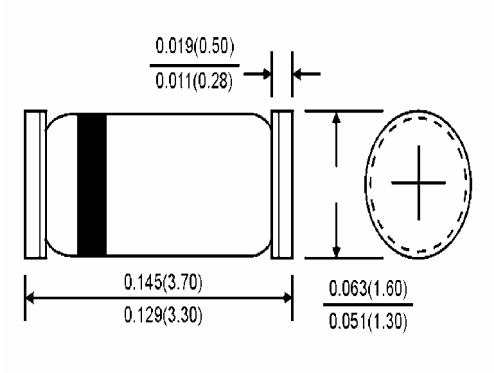


Dimensions in inches and (millimeters)

## Features

- ✧ Zener voltage range 2.0 to 75 volts
- ✧ Mini-MELF package
- ✧ Surface device type mounting
- ✧ Hermetically sealed glass
- ✧ Compression bonded construction
- ✧ All external surfaces are corrosion resistant and leads are readily solderable
- ✧ RoHS compliant
- ✧ Matte Tin (Sn) lead finish
- ✧ Color band indicates negative polarity

## Maximum Ratings and Electrical Characteristics

Rating at 25°C ambient temperature unless otherwise specified.

| Type Number | Symbol | Value | Units |
|---|---|---|---|
| Power Dissipation | Pd | 500 | mW |
| Maximum Forward Voltage @ IF=200mA | $V_F$ | 1.2 | V |
| Storage Temperature Range | $T_{STG}$ | -65 to + 200 | °C |
| Operating Junction Temperature | $T_J$ | + 200 | °C |

## ELECTRICAL CHARACTERISTICS (TA=25°C unless otherwise noted)

| Device | $V_Z$ @ $I_{zt}$ (Volts) Nom | $I_{ZT}$ mA | $Z_{ZT}$ @ $I_{ZT}$ Ω Max | $I_R$ @ $V_R$ (uA) Max | $V_R$ Volts |
|---|---|---|---|---|---|
| LLZ2V0 | 2.0 | 5 | 100 | 120 | 0.5 |
| LLZ2V2 | 2.2 | 5 | 100 | 120 | 0.7 |
| LLZ2V4 | 2.4 | 5 | 100 | 120 | 1.0 |
| LLZ2V7 | 2.7 | 5 | 110 | 100 | 1.0 |
| LLZ3V0 | 3.0 | 5 | 120 | 50 | 1.0 |
| LLZ3V3 | 3.3 | 5 | 120 | 20 | 1.0 |
| LLZ3V6 | 3.6 | 5 | 100 | 10 | 1.0 |
| LLZ3V9 | 3.9 | 5 | 100 | 5 | 1.0 |
| LLZ4V3 | 4.3 | 5 | 100 | 5 | 1.0 |
| LLZ4V7 | 4.7 | 5 | 80 | 5 | 1.0 |
| LLZ5V1 | 5.1 | 5 | 80 | 5 | 1.5 |
| LLZ5V6 | 5.6 | 5 | 60 | 5 | 2.5 |
| LLZ6V2 | 6.2 | 5 | 60 | 5 | 3.0 |
| LLZ6V8 | 6.8 | 5 | 20 | 2.0 | 3.5 |
| LLZ7V5 | 7.5 | 5 | 20 | 0.5 | 4.0 |
| LLZ8V2 | 8.2 | 5 | 20 | 0.5 | 5.0 |
| LLZ9V1 | 9.1 | 5 | 25 | 0.5 | 6.0 |
| LLZ10 | 10.0 | 5 | 30 | 0.2 | 7.0 |
| LLZ11 | 11.0 | 5 | 30 | 0.2 | 8.0 |
| LLZ12 | 12 | 5 | 30 | 0.2 | 9.0 |
| LLZ13 | 13 | 5 | 35 | 0.2 | 10.0 |
| LLZ15 | 15 | 5 | 40 | 0.2 | 11.0 |
| LLZ16 | 16 | 5 | 40 | 0.2 | 12.0 |
| LLZ18 | 18 | 5 | 45 | 0.2 | 13 |
| LLZ20 | 20 | 5 | 45 | 0.2 | 15 |
| LLZ22 | 22 | 5 | 30 | 0.2 | 17 |
| LLZ24 | 24 | 5 | 35 | 0.2 | 19 |
| LLZ27 | 27 | 5 | 45 | 0.2 | 21 |
| LLZ30 | 30 | 5 | 55 | 0.2 | 23 |

## ELECTRICAL CHARACTERISTICS (TA=25°C unless otherwise noted)

| Device | $V_Z$ @ $I_{zt}$ (Volts) Nom | $I_{ZT}$ mA | $Z_{ZT}$ @ $I_{ZT}$ Ω Max | $I_R$ @ $V_R$ (uA) Max | $V_R$ Volts |
|---|---|---|---|---|---|
| LLZ33 | 33 | 5 | 65 | 0.2 | 25 |
| LLZ36 | 36 | 5 | 75 | 0.2 | 27 |
| ZZL39 | 39 | 5 | 85 | 0.2 | 30 |
| LLZ43 | 43 | 5 | 90 | 0.2 | 33 |
| LLZ47 | 47 | 5 | 90 | 0.2 | 36 |
| LLZ51 | 51 | 5 | 110 | 0.2 | 39 |
| LLZ56 | 56 | 5 | 110 | 0.2 | 43 |
| LLZ62 | 62 | 2 | 201 | 0.2 | 47 |
| LLZ68 | 68 | 2 | 230 | 0.2 | 51 |
| LLZ75 | 75 | 2 | 240 | 0.2 | 56 |

**Notes:**

1. The type numbers listed have zener voltage as shown and have a standard tolerance on the nominal zener voltae of ±5% .
2. For detailed information on price, availability and deliver of nominal zener voltages between the voltages shown and tighter voltage tolerances.
3. The zener impedance is derived from the 60-cycle ac voltage, which results when an ac current having an ms value equal to 10% of the dc zener current ($I_{ZT}$ or $I_{ZK}$) is superimposed to $I_{ZT}$ or $I_{ZK}$.