PRODUCT SPECIFICATIONS

SHARP®

Integrated Circuits Group

LH28F008SAT-85

8M Flash Memory

(Model No.: LHF08S49)

Spec No.: EL105017

Issue Date: August 31, 1998

●Handle this document carefully for it contains material protected by international copyright law. Any reproduction, full or in part, of this material is prohibited without the express written permission of the company.

●When using the products covered herein, please observe the conditions written herein and the precautions outlined in the following paragraphs. In no event shall the company be liable for any damages resulting from failure to strictly adhere to these conditions and precautions.

(1) The products covered herein are designed and manufactured for the following application areas. When using the products covered herein for the equipment listed in Paragraph (2), even for the following application areas, be sure to observe the precautions given in Paragraph (2). Never use the products for the equipment listed in Paragraph (3).

- ·Office electronics
- ·Instrumentation and measuring equipment
- ·Machine tools
- ·Audiovisual equipment
- ·Home appliance
- ·Communication equipment other than for trunk lines

(2) Those contemplating using the products covered herein for the following equipment which demands high reliability, should first contact a sales representative of the company and then accept responsibility for incorporating into the design fail-safe operation, redundancy, and other appropriate measures for ensuring reliability and safety of the equipment and the overall system.

- ·Control and safety devices for airplanes, trains, automobiles, and other transportation equipment
- ·Mainframe computers
- ·Traffic control systems
- ·Gas leak detectors and automatic cutoff devices
- ·Rescue and security equipment
- ·Other safety devices and safety equipment,etc.

(3) Do not use the products covered herein for the following equipment which demands extremely high performance in terms of functionality, reliability, or accuracy.

- ·Aerospace equipment
- ·Communications equipment for trunk lines
- ·Control equipment for the nuclear power industry
- ·Medical equipment related to life support, etc.

(4) Please direct all queries and comments regarding the interpretation of the above three Paragraphs to a sales representative of the company.

●Please direct all queries regarding the products covered herein to a sales representative of the company.

CONTENTS

1 FEATURES 2
2 PRODUCT OVERVIEW 3
3 PRINCIPLES OF OPERATION 8
4 BUS OPERATION 9
5 COMMAND DEFINITIONS 11
6 EXTENDED BLOCK ERASE/BYTE WRITE CYCLING 13
7 AUTOMATED BYTE WRITE 13
8 AUTOMATED BLOCK ERASE 13
9 DESIGN CONSIDERATIONS 13
10 ABSOLUTE MAXIMUM RATINGS 18
11 OPERATING CONDITIONS 18
12 DC CHARACTERISTICS 18
13 CAPACITANCE 19
14 AC CHARACTERISTICS 20
15 BLOCK ERASE AND BYTE WRITE PERFORMANCE 23
16 ALTERNATIVE CE#-CONTROLLED WRITES 25
17 PACKAGING AND PACKING SPECIFICATION 27

LH28F008SAT-85
8 MBIT (1 MBIT x 8) FLASH MEMORY

1. FEATURES

- **High-Density Symmetrically Blocked Architecture**
  - **Sixteen 64 KByte Blocks**
- **Extended Cycling Capability**
  - **100,000 Block Erase Cycles**
  - **1.6 Million Block Erase Cycles per Chip**
- **Automated Byte Write and Block Erase**
  - **Command User Interface**
  - **Status Register**
- **System Performance Enhancements**
  - **RY/BY# Status Output**
  - **Erase Suspend Capability**
- **Deep-Powerdown Mode**
  - **10 μA I_{CC} Maximum**
- **Very High-Performance Read**
  - **85 ns Maximum Access Time**
- **Operating Temperature**
  - **0°C to +70°C**
- **SRAM-Compatible Write Interface**
- **Hardware Data Protection Feature**
  - **Erase/Write Lockout during Power Transitions**
- **Industry Standard Packaging**
  - **40-Lead TSOP**
- **ETOX™* Nonvolatile Flash Technology**
  - **12V Byte Write/Block Erase**
- **CMOS Process (P-type silicon substrate)**
- **Not designed or rated as radiation hardened**

SHARP's LH28F008SAT-85 8 Mbit Flash Memory is the highest density nonvolatile read/write solution for solid state storage. The LH28F008SA's extended cycling, symmetrically blocked architecture, fast access time, write automation and low power consumption provide a more reliable, lower power, lighter weight and higher performance alternative to traditional rotating disk technology. The LH28F008SAT-85 brings new capabilities to portable computing. Application and operating system software stored in resident flash memory arrays provide instant-on rapid execute-in-place and protection from obsolescence through in-system software updates. Resident software also extends system battery life and increases reliability by reducing disk drive accesses.

For high density data acquisition applications, the LH28F008SAT-85 offers a more cost-effective and reliable alternative to SRAM and battery. Traditional high density embedded applications, such as telecommunications, can take advantage of the LH28F008SA's nonvolatility, blocking and minimal system code requirements for flexible firmware and modular software designs.

The LH28F008SAT-85 is offered in 40-lead TSOP (standard) package. Pin assignments simplify board layout when integrating multiple devices in a flash memory array or subsystem. This device uses an integrated Command User Interface and state machine for simplified block erasure and byte write. The LH28F008SAT-85 memory map consists of 16 separately erasable 64 Kbyte blocks.

SHARP's LH28F008SAT-85 employs advanced CMOS circuitry for systems requiring low power consumption and noise immunity. Its 85 ns access time provides superior performance when compared with magnetic storage media. A deep powerdown mode lowers power consumption to 50 μW maximum thru V_{CC}, crucial in portable computing, handheld instrumentation and other low-power applications. The RP# power control input also provides absolute data protection during system powerup/down.

---

* ETOX is a trademark of Intel Corporation.

2. PRODUCT OVERVIEW

The LH28F008SAT-85 is a high-performance **8 Mbit** (8,388,608 bit) memory organized as **1 Mbyte** (1,048,576 bytes) of 8 bits each. **Sixteen 64 KByte** (65,536 byte) **blocks** are included on the LH28F008SAT-85. A memory map is shown in Figure 4 of this specification. A block erase operation erases one of the sixteen blocks of memory in typically **1.6 seconds**, independent of the remaining blocks. Each block can be independently erased and written **100,000 cycles. Erase Suspend** mode allows system software to suspend block erase to read data or execute code from any other block of the LH28F008SAT-85.

The LH28F008SAT-85 is available in the **40-lead TSOP** (Thin Small Outline Package, 1.2 mm thick) package. Pinouts are shown in Figure 2 of this specification.

The **Command User Interface** serves as the interface between the microprocessor or microcontroller and the internal operation of the LH28F008SAT-85.

Byte Write and Block Erase Automation allow byte write and block erase operations to be executed using a two-write command sequence to the Command User Interface. The internal **Write State Machine** (WSM) automatically executes the algorithms and timings necessary for byte write and block erase operations, including verifications, thereby unburdening the microprocessor or microcontroller. Writing of memory data is performed in byte increments typically within 8 µs. **I_{PP} byte write and block erase currents** are **10 mA typical, 30 mA maximum. V_{PP} byte write and block erase voltage** is **11.4V to 12.6V.**

The **Status Register** indicates the status of the WSM and when the WSM successfully completes the desired byte write or block erase operation.

The **RY/BY#** output gives an additional indicator of WSM activity, providing capability for both hardware signal of status (versus software polling) and status masking (interrupt masking for background erase, for example). Status polling using RY/BY# minimizes both CPU overhead and system power consumption. When low, RY/BY# indicates that the WSM is performing a block erase or byte write operation. RY/BY# high indicates that the WSM is ready for new commands, block erase is suspended or the device is in deep powerdown mode.

Maximum access time is **85 ns (t_{ACC})** over the commercial temperature range (0°C to +70°C) and over V_{CC} supply voltage range (4.5V to 5.5V and 4.75V to 5.25V). **I_{CC} active current** (CMOS Read) is **20mA typical, 35 mA maximum at 8 MHz.**

When the CE# and RP# pins are at V_{CC}, the **I_{CC} CMOS Standby** mode is enabled.

A **Deep Powerdown** mode is enabled when the RP# pin is at GND, minimizing power consumption and providing write protection. **I_{CC} current** in deep powerdown is **10 µA maximum**. Reset time of 400 ns is required from RP# switching high until outputs are valid to read attempts. Equivalently, the device has a wake time of 1 µs from RP# high until writes to the Command User Interface are recognized by the LH28F008SAT-85. With RP# at GND, the WSM is reset and the Status Register is cleared.

Please do not execute reprogramming "0" for the bit which has already been programed "0". Overwrite operation may generate unerasable bit. In case of reprogramming "0" to the data which has been programed "1".

- Program "0" for the bit in which you want to change data from "1" to "0".
- Program "1" for the bit which has already been programmed "0".

For example, changing data from "10111101" to "10111100" requires "11111110" programming.

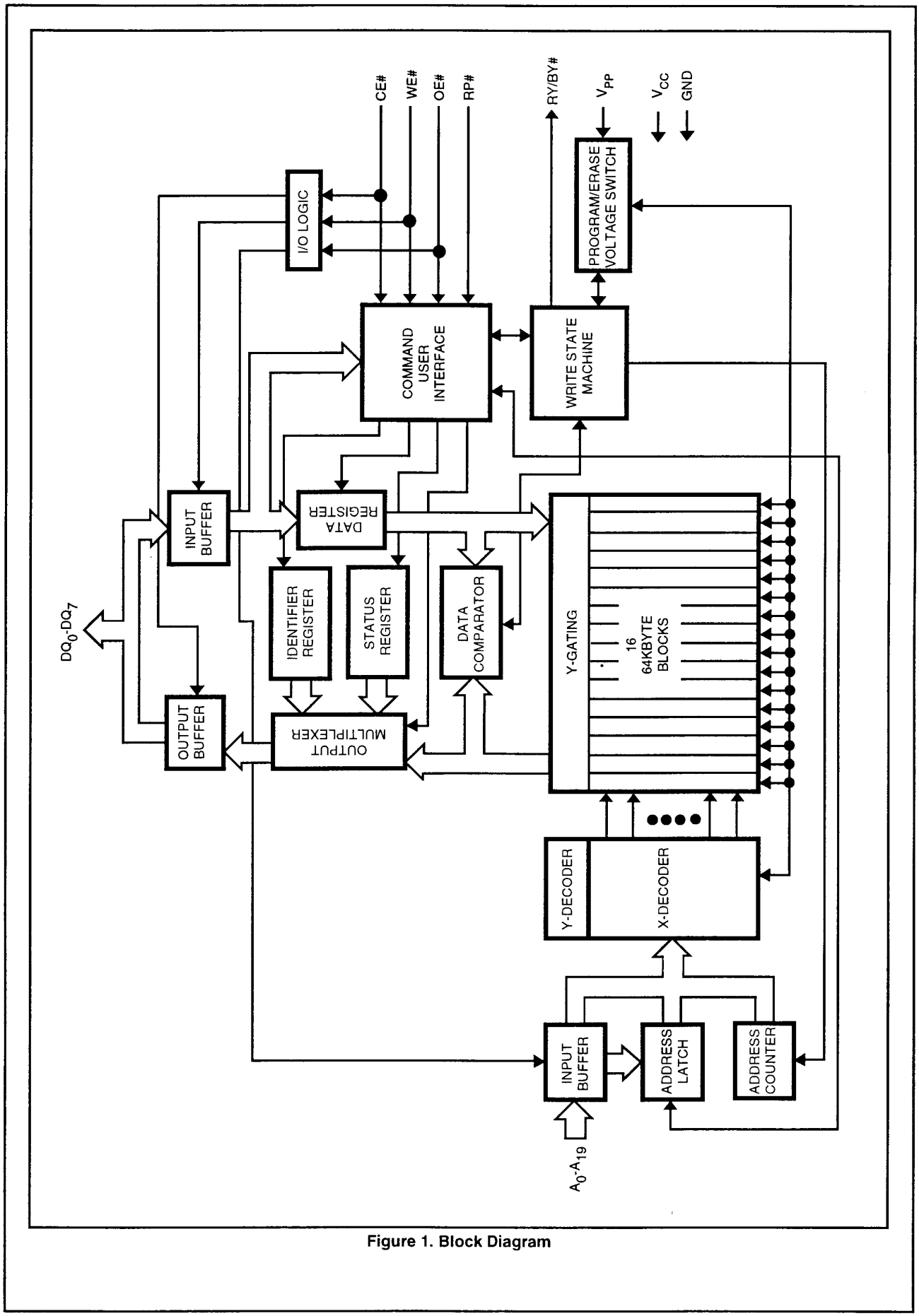

Figure 1. Block Diagram

Table 1. Pin Description

Symbol	Type	Name and Function
A_0-A_{19}	INPUT	**ADDRESS INPUTS:** for memory addresses. Addresses are internally latched during a write cycle.
DQ_0-DQ_7	INPUT/OUTPUT	**DATA INPUT/OUTPUTS:** Inputs data and commands during Command User Interface write cycles; outputs data during memory array, Status Register and Identifier read cycles. The data pins are active high and float to tri-state off when the chip is deselected or the outputs are disabled. Data is internally latched during a write cycle.
CE#	INPUT	**CHIP ENABLE:** Activates the device's control logic input buffers decoders, and sense amplifiers. CE# is active low; CE# high deselects the memory device and reduces power consumption to standby levels.
RP#	INPUT	**RESET/POWERDOWN:** Puts the device in deep powerdown mode. RP# is active low; RP# high gates normal operation. RP# also locks out block erase or byte write operations when active low, providing data protection during power transitions. RP# active resets internal automation. Exit from Deep Powerdown sets device to read-array mode.
OE#	INPUT	**OUTPUT ENABLE:** Gates the device's outputs through the data buffers during a read cycle. OE# is active low.
WE#	INPUT	**WRITE ENABLE:** Controls writes to the Command User Interface and array blocks. WE# is active low. Addresses and data are latched on the rising edge of the WE# pulse.
RY/BY#	OUTPUT	**READY/BUSY#:** Indicates the status of the internal Write State Machine. When low, it indicates that the WSM is performing a block erase or byte write operation. RY/BY# high indicates that the WSM is ready for new commands, block erase is suspended or the device is in deep powerdown mode. RY/BY# is always active and does **NOT** float to tri-state off when the chip is deselected or data outputs are disabled.
V_{PP}		**BLOCK ERASE/BYTE WRITE POWER SUPPLY:** for erasing blocks of the array or writing bytes of each block. **NOTE:** With $V_{PP}<V_{PPLMAX}$, memory contents cannot be altered.
V_{CC}		**DEVICE POWER SUPPLY (5V±0.5V, 5V±0.25V)**
GND		**GROUND**

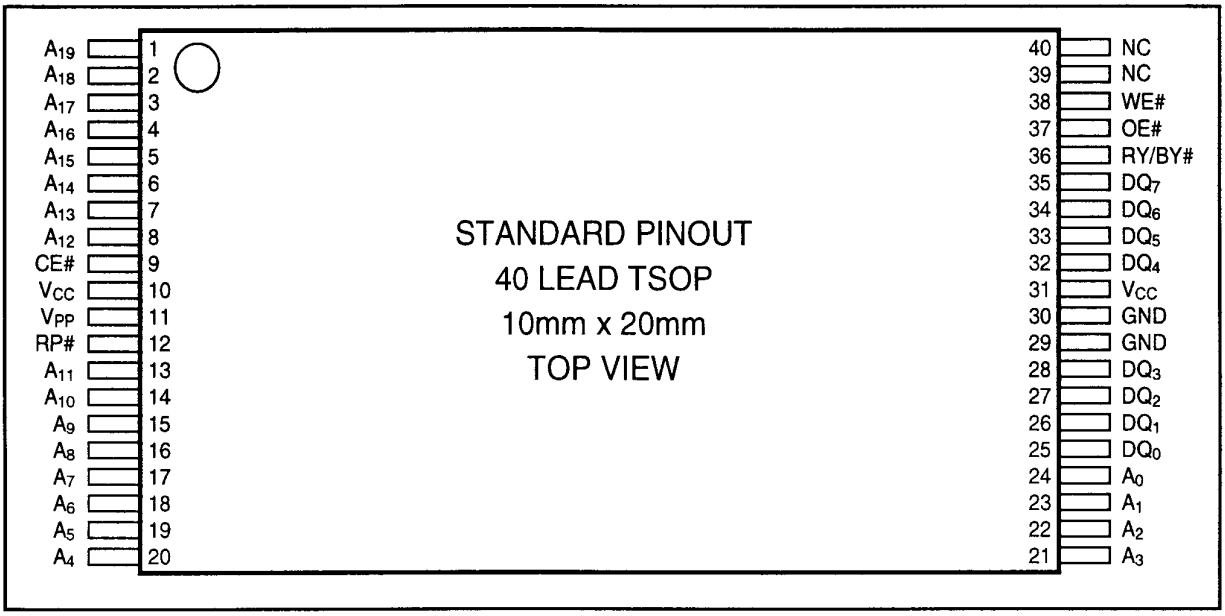

Figure 2. TSOP Lead Configuration

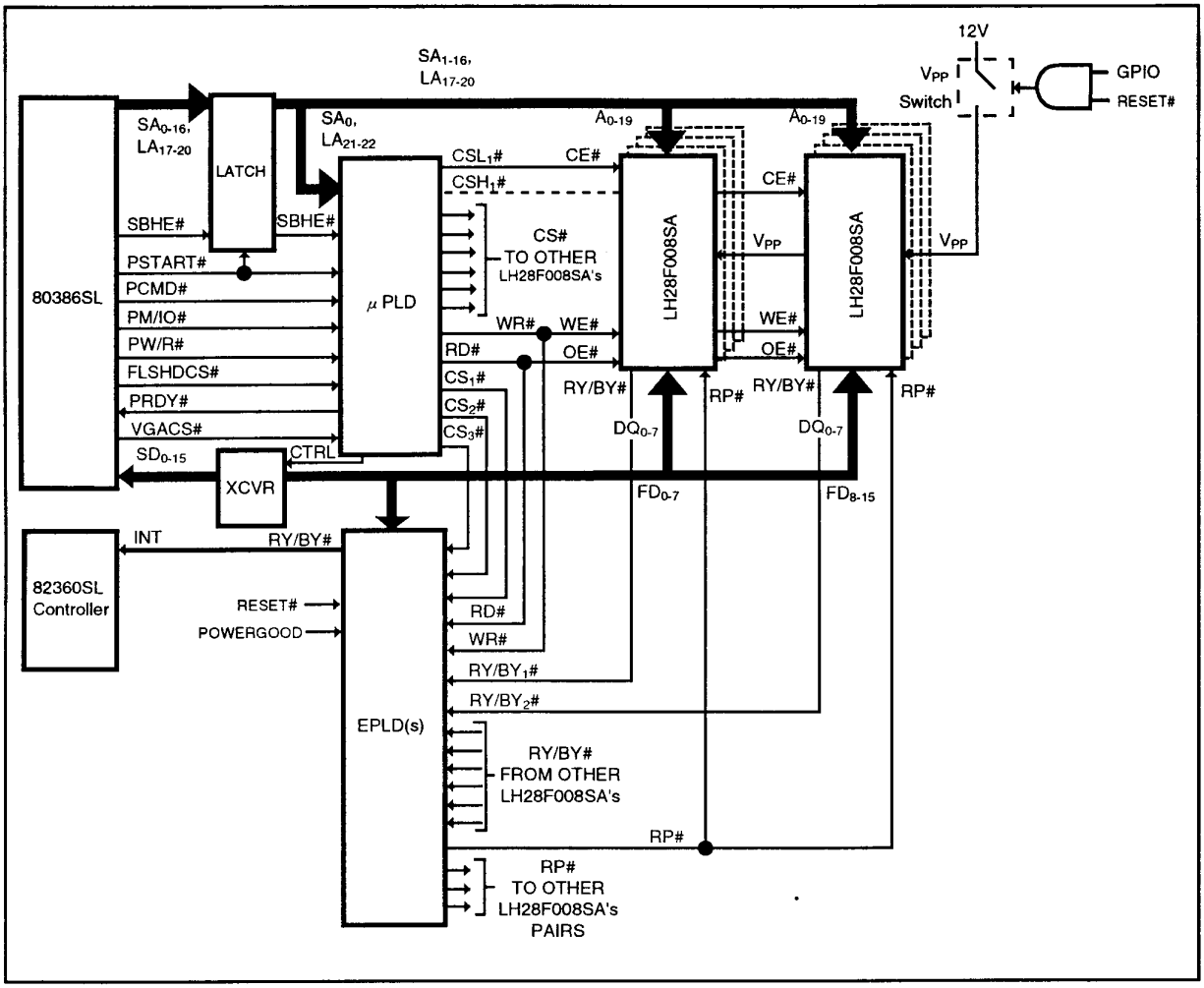

Figure 3. LH28F008SA Array Interface to 386SL Microprocessor Superset through PI Bus (Including RY/BY# Masking and Selective Powerdown), for DRAM Backup during System SUSPEND, Resident O/S and Applications and Motherboard Solid-State Disk.

3. PRINCIPLES OF OPERATION

The LH28F008SAT-85 includes on-chip write automation to manage write and erase functions. The Write State Machine allows for: 100% TTL-level control inputs; fixed power supplies during block erasure and byte write; and minimal processor overhead with SRAM-like interface timings.

After initial device powerup, or after return from deep powerdown mode (see Bus Operations), the LH28F008SAT-85 functions as a read-only memory. Manipulation of external memory-control pins allow array read, standby and output disable operations. Both Status Register and intelligent identifiers can also be accessed through the Command User Interface when $V_{PP}=V_{PPL}$.

This same subset of operations is also available when high voltage is applied to the V_{PP} pin. In addition, high voltage on V_{PP} enables successful block erasure and byte writing of the device. All functions associated with altering memory contents — byte write, block erase, status and intelligent identifier — are accessed via the Command User Interface and verified thru the Status Register.

Commands are written using standard microprocessor write timings. Command User Interface contents serve as input to the WSM, which controls the block erase and byte write circuitry. Write cycles also internally latch addresses and data needed for byte write or block erase operations. With the appropriate command written to the register, standard microprocessor read timings output array data, access the intelligent identifier codes, or output byte write and block erase status for verification.

Interface software to initiate and poll progress of internal byte write and block erase can be stored in any of the LH28F008SAT-85 blocks. This code is copied to, and executed from, system RAM during actual flash memory update. After successful completion of byte write and/or block erase, code/data reads from the LH28F008SAT-85 are again possible via the Read Array command. Erase suspend/resume capability allows system software to suspend block erase to read data and execute code from any other block.

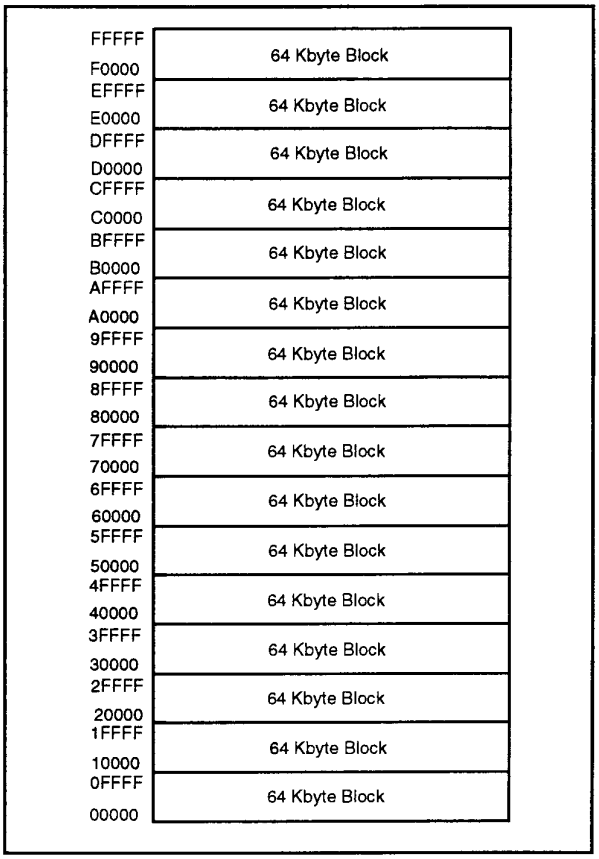

Figure 4. Memory Map

Command User Interface and Write Automation

An on-chip state machine controls block erase and byte write, freeing the system processor for other tasks. After receiving the Erase Setup and Erase Confirm commands, the state machine controls block pre-conditioning and erase, returning progress via the Status Register and RY/BY# output. Byte write is similarly controlled, after destination address and expected data are supplied. The program and erase algorithms of past standard Flash memories are now regulated by the state machine, including pulse repetition where required and internal verification and margining of data.

Data Protection

Depending on the application, the system designer may choose to make the V_{PP} power supply switchable (available only when memory byte writes/block erases are required) or hardwired to V_{PPH}. When $V_{PP}=V_{PPL}$, memory contents cannot be altered. The LH28F008SAT-85 Command User Interface architecture provides protection from unwanted byte write or block erase operations even when high voltage is applied to V_{PP}. Additionally, all functions are disabled whenever V_{CC} is below the write lockout voltage V_{LKO}, or when RP# is at V_{IL}. The LH28F008SAT-85 accommodates either design practice and encourages optimization of the processor-memory interface.

The two-step byte write/block erase Command User Interface write sequence provides additional software write protection.

4. BUS OPERATION

Flash memory reads, erases and writes in-system via the local CPU. All bus cycles to or from the flash memory conform to standard microprocessor bus cycles.

Read

The LH28F008SAT-85 has three read modes. The memory can be read from any of its blocks, and information can be read from the intelligent identifier or Status Register. V_{PP} can be at either V_{PPL} or V_{PPH}.

The first task is to write the appropriate read mode command to the Command User Interface (array, intelligent identifier, or Status Register). The LH28F008SAT-85 automatically resets to Read Array mode upon initial device powerup or after exit from deep powerdown. The LH28F008SAT-85 has four control pins, two of which must be logically active to obtain data at the outputs. Chip Enable (CE#) is the device selection control, and when active enables the selected memory device. Output Enable (OE#) is the data input/output (DQ_0-DQ_7) direction control, and when active drives data from the selected memory onto the I/O bus. RP# and WE# must also be at V_{IH}. Figure 8 illustrates read bus cycle waveforms.

Output Disable

With OE# at a logic-high level (V_{IH}), the device outputs are disabled. Output pins (DQ_0-DQ_7) are placed in a high-impedance state.

Standby

CE# at a logic-high level (V_{IH}) places the LH28F008SAT-85 in standby mode. Standby operation disables much of the LH28F008SA's circuitry and substantially reduces device power consumption. The outputs (DQ_0-DQ_7) are placed in a high-impedence state independent of the status of OE#. If the LH28F008SAT-85 is deselected during block erase or byte write, the device will continue functioning and consuming normal active power until the operation completes.

Table 2. Bus Operations(1,2)

Mode	Notes	RP#	CE#	OE#	WE#	A_0	V_{PP}	DQ_{0-7}	RY/BY#(3)
Read	6	V_{IH}	V_{IL}	V_{IL}	V_{IH}	X	X	D_{OUT}	X
Output Disable		V_{IH}	V_{IL}	V_{IH}	V_{IH}	X	X	High Z	X
Standby		V_{IH}	V_{IH}	X	X	X	X	High Z	X
Deep PowerDown		V_{IL}	X	X	X	X	X	High Z	V_{OH}
Intelligent Identifier (Mfr)	6	V_{IH}	V_{IL}	V_{IL}	V_{IH}	V_{IL}	X	89H	V_{OH}
Intelligent Identifier (Device)	6	V_{IH}	V_{IL}	V_{IL}	V_{IH}	V_{IH}	X	A2H	V_{OH}
Write	4,5,6	V_{IH}	V_{IL}	V_{IH}	V_{IL}	X	X	D_{IN}	X

NOTES:

1. Refer to DC Characteristics. When $V_{PP}=V_{PPL}$, memory contents can be read but not written or erased.
2. X can be V_{IL} or V_{IH} for control pins and addresses, and V_{PPL} or V_{PPH} for V_{PP}. See DC Characteristics for V_{PPL} and V_{PPH} voltages.
3. RY/BY# is V_{OL} when the Write State Machine is executing internal block erase or byte write algorithms. It is V_{OH} when the WSM is not busy, in Erase Suspend mode or deep powerdown mode.
4. Command writes involving block erase or byte write are only successfully executed when $V_{PP}=V_{PPH}$.
5. Refer to Table 3 for valid D_{IN} during a write operation.
6. Don't use the timing both OE# and WE# are V_{IL}.

Deep Power-Down

The LH28F008SAT-85 offers a deep powerdown feature, entered when RP# is at V_{IL}. Current draw thru V_{CC} is 10 µA maximum in deep powerdown mode, with current draw through V_{PP} maximal 5µA. During read modes, RP#-low deselects the memory, places output drivers in a high-impedence state and turns off all internal circuits. The LH28F008SAT-85 requires time t_{PHQV} (see AC Characteristics-Read-Only Operations) after return from powerdown until initial memory access outputs are valid. After this wakeup interval, normal operation is restored. The Command User Interface is reset to Read Array, and the upper 5bits of the Status Register are cleared to value 10000, upon return to normal operation.

During block erase or byte write modes, RP# low will abort either operation. Memory contents of the block being altered are no longer valid as the data will be partially written or erased. Time t_{PHWL} after RP# goes to logic-high (V_{IH}) is required before another command can be written.

Intelligent Identifier Operation

The intelligent identifier operation outputs the manufacturer code, 89H; and the device code, A2H for the LH28F008SAT-85. The system CPU can then automatically match the device with its proper block erase and byte write algorithms.

The manufacturer- and device-codes are read via the Command User Interface. Following a write of 90H to the Command User Interface, a read from address location 00000H outputs the manufacturer code (89H). A read from address 00001H outputs the device code (A2H). It is not necessary to have high voltage applied to V_{PP} to read the intelligent identifiers from the Command User Interface.

Write

Writes to the Command User Interface enable reading of device data and intelligent identifiers. They also control inspection and clearing of the Status Register. Additionally, when $V_{PP}=V_{PPH}$, the Command User Interface controls block erasure and byte write. The contents of the interface register serve as input to the internal state machine.

Table 3. Command Definitions(6)

Command	Bus Cycles Req'd	Notes	First Bus Cycle			Second Bus Cycle		
			Operation(1)	Address(2)	Data(3)	Operation(1)	Address(2)	Data(3)
Read Array/Reset	1		Write	X	FFH			
Intelligent Identifier	3	4	Write	X	90H	Read	IA	IID
Read Status Register	2		Write	X	70H	Read	X	SRD
Clear Status Register	1		Write	X	50H			
Erase Setup/Erase Confirm	2		Write	BA	20H	Write	BA	D0H
Erase Suspend/Erase Resume	2		Write	X	B0H	Write	X	D0H
Byte Write Setup/Write	2	5	Write	WA	40H	Write	WA	WD
Alternate Byte Write Setup/Write	2	5	Write	WA	10H	Write	WA	WD

NOTES:

1. Bus operations are defined in Table 2.
2. IA=Identifier Address: 00H for manufacturer code, 01H for device code.
   BA=Address within the block being erased.
   WA=Address of memory location to be written.
3. SRD=Data read from Status Register. See Table 4 for a description of the Status Register bits.
   WD=Data to be written at location WA. Data is latched on the rising edge of WE#.
   IID=Data read from intelligent identifiers.
4. Following the intelligent identifier command, two read operations access manufacture and device codes.
5. Either 40H or 10H are recognized by the WSM as the Byte Write Setup command.
6. Commands other than those shown above are reserved by SHARP for future device implementations and should not be used.

The Command User Interface itself does not occupy an addressable memory location. The interface register is a latch used to store the command and address and data information needed to execute the command. Erase Setup and Erase Confirm commands require both appropriate command data and an address within the block to be erased. The Byte Write Setup command requires both appropriate command data and the address of the location to be written, while the Byte Write command consists of the data to be written and the address of the location to be written.

The Command User Interface is written by bringing WE# to a logic-low level (V_{IL}) while CE# is low. Addresses and data are latched on the rising edge of WE#. Standard microprocessor write timings are used.

Refer to AC Write Characteristics and the AC Waveforms for Write Operations, Figure 9, for specific timing parameters.

5. COMMAND DEFINITIONS

When V_{PPL} is applied to the V_{PP} pin, read operations from the Status Register, intelligent identifiers, or array blocks are enabled. Placing V_{PPH} on V_{PP} enables successful byte write and block erase operations as well.

Device operations are selected by writing specific commands into the Command User Interface. Table 3 defines the LH28F008SAT-85 commands.

Read Array Command

Upon initial device powerup and after exit from deep powerdown mode, the LH28F008SAT-85 defaults to Read Array mode. This operation is also initiated by writing FFH into the Command User Interface. Microprocessor read cycles retrieve array data. The device remains enabled for reads until the Command User Interface contents are altered. Once the internal Write State Machine has started a block erase or byte write operation, the device will not recognize the Read Array command, until the WSM has completed its operation. The Read Array command is functional when $V_{PP}=V_{PPL}$ or V_{PPH}.

Intelligent Identifier Command

The LH28F008SAT-85 contains an intelligent identifier operation, initiated by writing 90H into the Command User Interface. Following the command write, a read cycle from address 00000H retrieves the manufacturer code of 89H. A read cycle from address 00001H returns the device code of A2H. To terminate the operation, it is necessary to write another valid command into the register. Like the Read Array command, the intelligent identifier command is functional when $V_{PP}=V_{PPL}$ or V_{PPH}.

Table 4. Status Register Definitions

WSMS	ESS	ES	BWS	VPPS	R	R	R
7	6	5	4	3	2	1	0

SR. 7 = WRITE STATE MACHINE STATUS (WSMS)
1 = Ready
0 = Busy
SR. 6 = ERASE SUSPEND STATUS (ESS)
1 = Erase Suspended
0 = Erase in Progress/Completed
SR. 5 = ERASE STATUS (ES)
1 = Error in Block Erasure
0 = Successful Block Erase
SR. 4 = BYTE WRITE STATUS (BWS)
1 = Error in Byte Write
0 = Successful Byte Write
SR. 3 = V_{PP} STATUS (VPPS)
1 = V_{PP} Low Detect; Operation Abort
0 = V_{PP} OK
SR. 2-0 = RESERVED FOR FUTURE (R) ENHANCEMENTS

These bits are reserved for future use and should be masked out when polling the Status Register.

NOTES:
RY/BY# or the Write State Machine Status bit must first be checked to determine byte write or block erase completion, before the Byte Write or Erase Status bit are checked for success. If the Byte Write AND Erase Status bits are set to "1"s during a block erase attempt, an improper command sequence was entered. Attempt the operation again.
If V_{PP} low status is detected, the Status Register must be cleared before another byte write or block erase operation is attempted. The V_{PP} Status bit, unlike an A/D converter, does not provide continuous indication of V_{PP} level. The WSM interrogates the V_{PP} level only after the byte write or block erase command sequences have been entered and informs the system if V_{PP} has not been switched on. The V_{PP} Status bit is not guaranteed to report accurate feedback between V_{PPL} and V_{PPH}.

Read Status Register Command

The LH28F008SAT-85 contains a Status Register which may be read to determine when a byte write or block erase operation is complete, and whether that operation completed successfully. The Status Register may be read at any time by writing the Read Status Register command (70H) to the Command User Interface. After writing this command, all subsequent read operations output data from the Status Register, until another valid command is written to the Command User Interface. The contents of the Status Register are latched on the falling edge of OE# or CE#, whichever occurs last in the read cycle. OE# or CE# must be toggled to V_{IH} before further reads to update the Status Register latch. The Read Status Register command functions when $V_{PP}=V_{PPL}$ or V_{PPH}.

Clear Status Register Command

The Erase Status and Byte Write Status bits are set to "1"s by the Write State Machine and can only be reset by the Clear Status Register Command. These bits indicate various failure conditions (see Table 4). By allowing system software to control the resetting of these bits, several operations may be performed (such as cumulatively writing several bytes or erasing multiple blocks in sequence). The Status Register may then be polled to determine if an error occurred during that sequence. This adds flexibility to the way the device may be used.

Additionally, the V_{PP} Status bit (SR.3) MUST be reset by system software before further byte writes or block erases are attempted. To clear the Status Register, the Clear Status Register command (50H) is written to the Command User Interface. The Clear Status Register command is functional when $V_{PP}=V_{PPL}$ or V_{PPH}.

Erase Setup/Erase Confirm Commands

Erase is executed one block at a time, initiated by a two-cycle command sequence. An Erase Setup command (20H) is first written to the Command User Interface, followed by the Erase Confirm command (D0H). These commands require both appropriate sequencing and an address within the block to be erased to FFH. Block preconditioning, erase and verify are all handled internally by the Write State Machine, invisible to the system. After the two-command erase sequence is written to it, the LH28F008SAT-85 automatically outputs Status Register data when read (see Figure 6; Block Erase Flowchart). The CPU can detect the completion of the erase event by analyzing the output of the RY/BY# pin, or the WSM Status bit of the Status Register.

When erase is completed, the Erase Status bit should be checked. If erase error is detected, the Status Register should be cleared. The Command User Interface remains in Read Status Register mode until further commands are issued to it.

This two-step sequence of set-up followed by execution ensures that memory contents are not accidentally erased. Also, reliable block erasure can only occur when $V_{PP}=V_{PPH}$. In the absence of this high voltage, memory contents are protected against erasure. If block erase is attempted while $V_{PP}=V_{PPL}$, the V_{PP} Status bit will be set to "1". Erase attempts while $V_{PPL}<V_{PP}<V_{PPH}$ produce spurious results and should not be attempted.

Erase Suspend/Erase Resume Commands

The Erase Suspend command allows block erase interruption in order to read data from another block of memory. Once the erase process starts, writing the Erase Suspend command (B0H) to the Command User Interface requests that the WSM suspend the erase sequence at a predetermined point in the erase algorithm. The LH28F008SAT-85 continues to output Status Register data when read, after the Erase Suspend command is written to it. Polling the WSM Status and Erase Suspend Status bits will determine when the erase operation has been suspended (both will be set to "1"). RY/BY# will also transition to V_{OH}.

At this point, a Read Array command can be written to the Command User Interface to read data from blocks other than that which is suspended. The only other valid commands at this time are Read Status Register (70H) and Erase Resume (D0H), at which time the WSM will continue with the erase process. The Erase Suspend Status and WSM Status bits of the Status Register will be automatically cleared and RY/BY# will return to V_{OL}. After the Erase Resume command is written to it, the LH28F008SAT-85 automatically outputs Status Register data when read (see Figure 7; Erase Suspend/Resume Flowchart). V_{PP} must remain at V_{PPH} while the LH28F008SAT-85 is in Erase Suspend.

Byte Write Setup/Write Commands

Byte write is executed by a two-command sequence. The Byte Write Setup command (40H or 10H) is written to the Command User Interface, followed by a second write specifying the address and data (latched on the rising edge of WE#) to be written. The WSM then takes over, controlling the byte write and write verify algorithms internally. After the two-command byte write sequence is written to it, the LH28F008SAT-85 automatically outputs Status Register data when read (see Figure 5; Byte Write Flowchart). The CPU can detect the completion of the byte write event by analyzing the output of the RY/BY# pin, or the WSM Status bit of the Status Register. Only the Read Status Register command is valid while byte write is active.

When byte write is complete, the Byte Write Status bit should be checked. If byte write error is detected, the Status Register should be cleared. The internal WSM verify only detects errors for "1"s that do not successfully write to "0"s. The Command User Interface remains in Read Status Register mode until further commands are issued to it. If byte write is attempted while $V_{PP}=V_{PPL}$, the V_{PP} Status bit will be set to "1". Byte write attempts while $V_{PPL}<V_{PP}<V_{PPH}$ produce spurious results and should not be attempted.

6. EXTENDED BLOCK ERASE/BYTE WRITE CYCLING

The LH28F008SAT-85 is designed for 100,000 byte write/block erase cycles on each of the sixteen 64 Kbyte blocks. Low electric fields, advanced oxides and minimal oxide area per cell subjected to the tunneling electric field combine to greatly reduce oxide stress and the probability of failure. A 20 Mbyte solid-state drive using an array of LH28F008SA's has a MTBF (Mean Time Between Failure) of 33.3 million hours(1), over 600 times more reliable than equivalent rotating disk technology.

7. AUTOMATED BYTE WRITE

The LH28F008SAT-85 integrates the Quick-Pulse programming algorithm using the Command User Interface, Status Register and Write State Machine (WSM). On-chip integration dramatically simplifies system software and provides processor interface timings to the Command User Interface and Status Register. WSM operation, internal verify and V_{PP} high voltage presence are monitored and reported via the RY/BY# output and appropriate Status Register bits. Figure 5 shows a system software flowchart for device byte write. The entire sequence is performed with V_{PP} at V_{PPH}.

Byte write abort occurs when RP# transitions to V_{IL}, or V_{PP} drops to V_{PPL}. Although the WSM is halted, byte data is partially written at the location where byte write was aborted. Block erasure, or a repeat of byte write, is required to initialize this data to a known value.

8. AUTOMATED BLOCK ERASE

As above, the Quick-Erase algorithm is now implemented internally, including all preconditioning of block data. WSM operation, erase success and V_{PP} high voltage presence are monitored and reported through RY/BY# and the Status Register. Additionally, if a command other than Erase Confirm is written to the device following Erase Setup, both the Erase Status and Byte Write Status bits will be set to "1"s. When issuing the Erase Setup and Erase Confirm commands, they should be written to an address within the address range of the block to be erased. Figure 6 shows a system software flowchart for block erase.

Erase typically takes 1.6 seconds per block. The Erase Suspend/Erase Resume command sequence allows suspension of this erase operation to read data from a block other than that in which erase is being performed. A system software flowchart is shown in Figure 7.

The entire sequence is performed with V_{PP} at V_{PPH}. Abort occurs when RP# transitions to V_{IL} or V_{PP} falls to V_{PPL}, while erase is in progress. Block data is partially erased by this operation, and a repeat of erase is required to obtain a fully erased block.

9. DESIGN CONSIDERATIONS

Three-Line Output Control

The LH28F008SAT-85 will often be used in large memory arrays. SHARP provides three control inputs to accommodate multiple memory connections. Three-line control provides for:

a) lowest possible memory power dissipation
b) complete assurance that data bus contention will not occur

To efficiently use these control inputs, an address decoder should enable CE#, while OE# should be connected to all memory devices and the system's READ# control line. This assures that only selected memory devices have active outputs while deselected memory devices are in Standby Mode. Finally, RP# should either be tied to the system RESET#, or connected to V_{CC} if unused.

(1) Assumptions: 10 Kbyte file written every 10 minutes. (20 Mbyte array)/(10 Kbyte file) = 2,000 file writes before erase required.
(2000 files writes/erase) x (100,000 cycles per LH28F008SA block) = 200 million file writes.
(200 x 10^6 file writes) x (10 min/write) x (1 hr/60 min) = **33.3 x 10^6 MTBF**.

RY/BY# and Byte Write/Block Erase Polling

RY/BY# is a full CMOS output that provides a hardware method of detecting byte write and block erase completion. It transitions low time t_{WHRL} after a write or erase command sequence is written to the LH28F008SAT-85, and returns to V_{OH} when the WSM has finished executing the internal algorithm.

RY/BY# can be connected to the interrupt input of the system CPU or controller. It is active at all times, not tristated if the LH28F008SAT-85 CE# or OE# inputs are brought to V_{IH}. RY/BY# is also V_{OH} when the device is in Erase Suspend or deep powerdown modes.

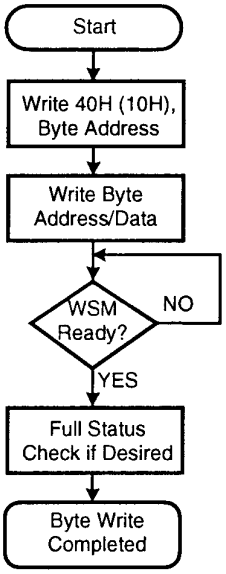

Bus Operation	Command	Comments
Write	Byte Write Setup	Data = 40H (10H) Address = Byte to be written
Write	Byte Write	Data to be written Address = Byte to be written
Standby/Read		Check RY/BY# V_{OH} = Ready, V_{OL} = Busy or Read Status Register Check SR.7 1 = Ready, 0 = Busy Toggle OE# or CE# to update Status Register

Repeat for subsequent bytes

Full status check can be done after each byte or after a sequence of bytes

Write FFH after the last byte write operation to reset the device to Read Array Mode

FULL STATUS CHECK PROCEDURE

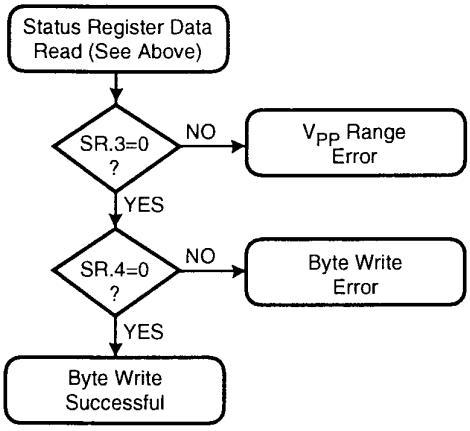

Bus Operation	Command	Comments
Optional Read		CPU may already have read Status Register data in WSM Ready polling above
Standby		Check SR.3 1 = V_{PP} Low Detect
Standby		Check SR.4 1 = Byte Write Error

SR.3 MUST be cleared, if set during a byte write attempt, before further attempts are allowed by the Write State Machine.

SR.4 is only cleared by the Clear Status Register Command, in cases where multiple bytes are written before full status is checked.

If error is detected, clear the Status Register before attempting retry or other error recovery.

Figure 5. Automated Byte Write Flowchart

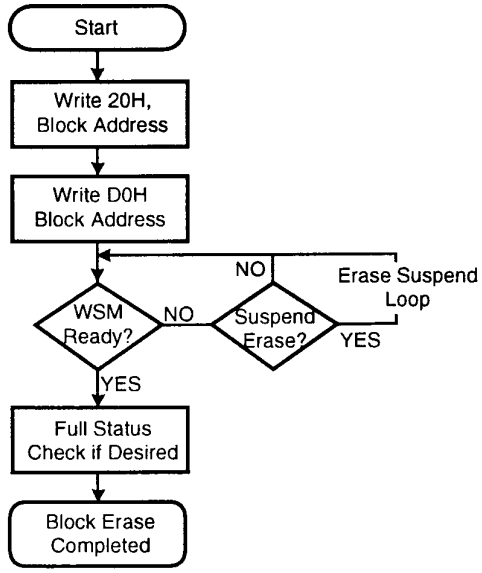

Bus Operation	Command	Comments
Write	Erase Setup	Data = 20H Address = Within block to be erased
Write	Erase	Data = D0H Address = Within block to be erased
Standby/Read		Check RY/BY# V_{OH} = Ready, V_{OL} = Busy or Read Status Register Check SR.7 1 = Ready, 0 = Busy Toggle OE# or CE# to update Status Register

Repeat for subsequent bytes

Full status check can be done after each block or after a sequence of blocks

Write FFH after the last block erase operation to reset the device to Read Array Mode

FULL STATUS CHECK PROCEDURE

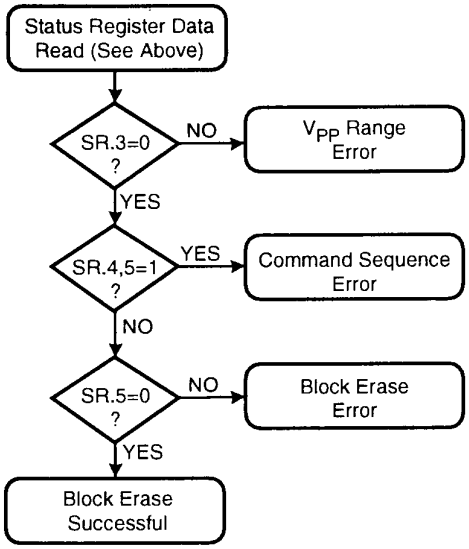

Bus Operation	Command	Comments
Optional Read		CPU may already have read Status Register data in WSM Ready polling above
Standby		Check SR.3 1 = V_{PP} Low Detect
Standby		Check SR.4,5 Both 1 = Command Sequence Error
Standby		Check SR.5 1 = Block Erase Error

SR.3 MUST be cleared, if set during a block erase attempt, before further attempts are allowed by the Write State Machine.

SR.5 is only cleared by the Clear Status Register Command, in cases where multiple blocks are erased before full status is checked.

If error is detected, clear the Status Register before attempting retry or other error recovery.

Figure 6. Automated Block Erase Flowchart

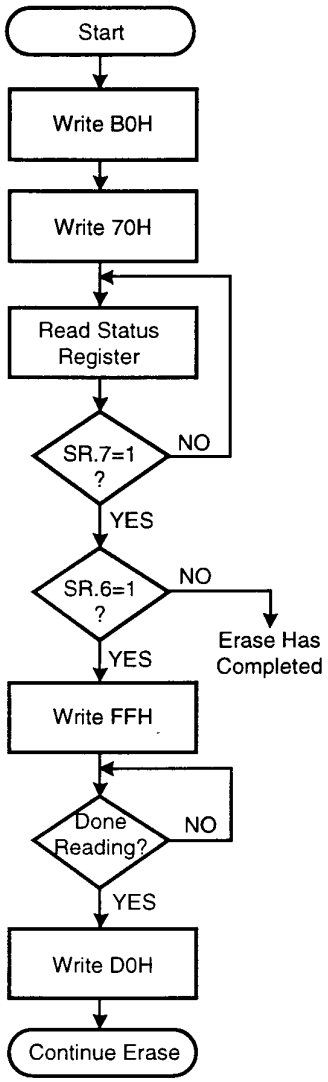

Bus Operation	Command	Comments
Write	Erase Suspend	Data = B0H
Write	Read Status Register	Data = 70H
Standby/ Read		Check RY/BY# V_{OH} = Ready, V_{OL} = Busy or Read Status Register Check SR.7 1 = Ready, 0 = Busy Toggle OE# or CE# to Update Status Register
Standby		Check SR.6 1 = Suspended
Write	Read Array	Data = FFH
Read		Read array data from block other than that being erased.
Write	Erase Resume	Data = D0H

Figure 7. Erase Suspend/Resume Flowchart

Power Supply Decoupling

Flash memory power switching characteristics require careful device decoupling. System designers are interested in 3 supply current issues; standby current levels (I_{SB}), active current levels (I_{CC}) and transient peaks produced by falling and rising edges of CE#. Transient current magnitudes depend on the device outputs' capacitive and inductive loading. Two-line control and proper decoupling capacitor selection will suppress transient voltage peaks. Each device should have a 0.1 µF ceramic capacitor connected between each V_{CC} and GND, and between its V_{PP} and GND. These high frequency, low inherent-inductance capacitors should be placed as close as possible to package leads. Additionally, for every 8 devices, a 4.7 µF electrolytic capacitor should be placed at the array's power supply connection between V_{CC} and GND. The bulk capacitor will overcome voltage slumps caused by PC board trace inductances.

V_{PP} Trace on Printed Circuit Boards

Writing flash memories, while they reside in the target system, requires that the printed circuit board designer pay attention to the V_{PP} power supply trace. The V_{PP} pin supplies the memory cell current for writing and erasing. Use similar trace widths and layout considerations given to the V_{CC} power bus. Adequate V_{PP} Supply traces and decoupling will decrease V_{PP} voltage spikes and overshoots.

V_{CC}, V_{PP}, RP# Transitions and the Command/ Status Registers

Byte write and block erase completion are not guaranteed if V_{PP} drops below V_{PPH}. If the V_{PP} Status bit of the Status Register (SR.3) is set to "1", a Clear Status Register command MUST be issued before further byte write/block erase attempts are allowed by the WSM. Otherwise, the Byte Write (SR.4) or Erase (SR.5) Status bits of the Status Register will be set to "1"s if error is detected. RP# transitions to V_{IL} during byte write and block erase also abort the operations. Data is partially altered in either case, and the command sequence must be repeated after normal operation is restored. Device poweroff, or RP# transitions to V_{IL}, clear the Status Register to initial value 10000 for the upper 5 bits.

The Command User Interface latches commands as issued by system software and is not altered by V_{PP} or CE# transitions or WSM actions. Its state upon powerup, after exit from deep powerdown or after V_{CC} transitions below V_{LKO}, is Read Array Mode.

After byte write or block erase is complete, even after V_{PP} transitions down to V_{PPL}, the Command User Interface must be reset to Read Array mode via the Read Array command if access to the memory array is desired.

Power Up/Down Protection

The LH28F008SAT-85 is designed to offer protection against accidental block erasure or byte writing during power transitions. Upon power-up, the LH28F008SAT-85 is indifferent as to which power supply, V_{PP} or V_{CC}, powers up first. Power supply sequencing is not required. Internal circuitry in the LH28F008SAT-85 ensures that the Command User Interface is reset to the Read Array mode on power up.

A system designer must guard against spurious writes for V_{CC} voltages above V_{LKO} when V_{PP} is active. Since both WE# and CE# must be low for a command write, driving either to V_{IH} will inhibit writes. The Command User Interface architecture provides an added level of protection since alteration of memory contents only occurs after successful completion of the two-step command sequences.

Finally, the device is disabled until RP# is brought to V_{IH}, regardless of the state of its control inputs. This provides an additional level of memory protection.

Power Dissipation

When designing portable systems, designers must consider battery power consumption not only during device operation, but also for data retention during system idle time. Flash nonvolatility increases usable battery life, because the LH28F008SAT-85 does not consume any power to retain code or data when the system is off.

In addition, the LH28F008SA's deep powerdown mode ensures extremely low power dissipation even when system power is applied. For example, portable PCs and other power sensitive applications, using an array of LH28F008SA's for solid-state storage, can lower RP# to V_{IL} in standby or sleep modes, producing negligible power consumption. If access to the LH28F008SAT-85 is again needed, the part can again be read, following the t_{PHQV} and t_{PHWL} wakeup cycles required after RP# is first raised back to V_{IH}. See AC Characteristics — Read-Only and Write Operations and Figures 8 and 9 for more information.

10. ABSOLUTE MAXIMUM RATINGS*

Operating Temperature
During Read .....0°C to +70°C(1)
During Block Erase/Byte Write .....0°C to +70°C
Temperature Under Bias .....-10°C to +80°C
Storage Temperature .....-65°C to +125°C
Voltage on Any Pin
(except V_{CC} and V_{PP})
with Respect to GND .....-2.0V to +7.0V(2)
V_{PP} Program Voltage with
Respect to GND during
Block Erase/Byte Write .....-2.0V to +14.0V(2,3)
V_{CC} Supply Voltage
with Respect to GND .....-2.0V to +7.0V(2)
Output Short Circuit Current .....100mA(4)

* WARNING: Stressing the device beyond the "Absolute Maximum Ratings" may cause permanent damage. These are stress ratings only. Operation beyond the "Operating Conditions" is not recommended and extended exposure beyond the "Operating Conditions" may affect device reliability.

NOTES:

1. Operating temperature is for commercial product defined by this specification.
2. All specified voltages are with respect to GND. Minimum DC voltage is -0.5V on input/output pins and -0.2V on V_{CC} and V_{PP} pins. During transitions, this level may undershoot to -2.0V for periods < 20ns. Maximum DC voltage on input/output pins, V_{CC} and RP# pin is V_{CC}+0.5V which, during transitions, may overshoot to V_{CC}+2.0V for periods < 20ns.
3. Maximum DC voltage on V_{PP} may overshoot to +14.0V for periods < 20ns.
4. Output shorted for no more than one second. No more than one output shorted at a time.

11. OPERATING CONDITIONS

Symbol	Parameter	Notes	Min.	Max.	Unit
T_A	Operating Temperature		0	+70	°C
V_{CC}	V_{CC} Supply Voltage (5V±0.5V)	1	4.50	5.50	V
V_{CC}	V_{CC} Supply Voltage (5V±0.25V)	1	4.75	5.25	V

NOTE:

1. ±0.25V V_{CC} specifications reference the LH28F008SA-85 in its High Speed configuration. ±0.5V V_{CC} specifications reference the LH28F008SA-85 in its Standard configuration.

12. DC CHARACTERISTICS

T_A=0~+70°C

Symbol	Parameter	Notes	Min.	Typ.	Max.	Unit	Test Condition
I_{LI}	Input Load Current	1			±1.0	µA	$V_{CC}=V_{CC}$ Max. $V_{IN}=V_{CC}$ or GND
I_{LO}	Output Leakage Current	1			±10	µA	$V_{CC}=V_{CC}$ Max. $V_{OUT}=V_{CC}$ or GND
I_{CCS}	V_{CC} Standby Current	1, 3		1.0	2.0	mA	$V_{CC}=V_{CC}$ Max. CE#=RP#=V_{IH}
				30	100	µA	$V_{CC}=V_{CC}$ Max. CE#=RP#=V_{CC}±0.2V
I_{CCD}	V_{CC} Deep PowerDown Current	1		0.2	10	µA	RP#=GND ±0.2V I_{OUT}(RY/BY#)=0mA
I_{CCR}	V_{CC} Read Current	1		20	35	mA	$V_{CC}=V_{CC}$ Max., CE#=GND f=8MHz, I_{OUT}=0mA CMOS Inputs
				25	50	mA	$V_{CC}=V_{CC}$ Max., CE#=V_{IL} f=8MHz, I_{OUT}=0mA TTL Inputs

DC CHARACTERISTICS (Continued)

Symbol	Parameter	Notes	Min.	Typ.	Max.	Unit	Test Condition
I_{CCW}	V_{CC} Byte Write Current	1		10	30	mA	Byte Write In Progress
I_{CCE}	V_{CC} Block Erase Current	1		10	30	mA	Block Erase In Progress
I_{CCES}	V_{CC} Erase Suspend Current	1,2		5	10	mA	Block Erase Suspended CE#=V_{IH}
I_{PPS}	V_{PP} Standby Current	1			+15/ -300	µA	V_{PP}=GND
I_{PPD}	V_{PP} Deep PowerDown Current	1		0.1	5.0	µA	RP#=GND ±0.2V
I_{PPR}	V_{PP} Read Current	1			200	µA	V_{PP}>V_{CC}
I_{PPW}	V_{PP} Byte Write Current	1		10	30	mA	V_{PP}=V_{PPH} Byte Write in Progress
I_{PPE}	V_{PP} Block Erase Current	1		10	30	mA	V_{PP}=V_{PPH} Block Erase in Progress
I_{PPES}	V_{PP} Erase Suspend Current	1		90	200	µA	V_{PP}=V_{PPH} Block Erase Suspended
V_{IL}	Input Low Voltage		-0.5		0.8	V	
V_{IH}	Input High Voltage		2.0		V_{CC}+0.5	V	
V_{OL}	Output Low Voltage	3			0.45	V	V_{CC}=V_{CC} Min. I_{OL}=5.8mA
V_{OH1}	Output High Voltage (TTL)	3	2.4			V	V_{CC}=V_{CC} Min. I_{OH}=-2.5mA
V_{OH2}	Output High Voltage (CMOS)		0.85V_{CC}			V	I_{OH}=-2.0mA V_{CC}=V_{CC} Min.
			V_{CC}-0.4				I_{OH}=-100µA V_{CC}=V_{CC} Min.
V_{PPL}	V_{PP} during Normal Operations	4	0.0		6.5	V	
V_{PPH}	V_{PP} during Erase/Write Operations		11.4	12.0	12.6	V	
V_{LKO}	V_{CC} Erase/Write Lock Voltage		2.0			V	

NOTES:

1. All currents are in RMS unless otherwise noted. Typical values at V_{CC}=5.0V, V_{PP}=12.0V, T_A=+25°C.
2. I_{CCES} is specified with the device deselected. If read while in Erase Suspend Mode, current draw is the sum of I_{CCES} and I_{CCR}.
3. Includes RY/BY#.
4. Block Erases/Byte Writes are inhibited when V_{PP}=V_{PPL} and not guaranteed in the range between V_{PPH} and V_{PPL}.

13. CAPACITANCE[1]

T_A=+25°C, f=1MHz

Symbol	Parameter	Typ.	Max.	Unit	Condition
C_{IN}	Input Capacitance	6	8	pF	V_{IN}=0V
C_{OUT}	Output Capacitance	8	12	pF	V_{OUT}=0V

NOTE:

1. Sampled, not 100% tested.

AC INPUT/OUTPUT REFERENCE WAVEFORM(1)

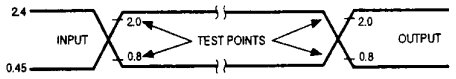

AC test inputs are driven at V_{OH} ($2.4V_{TTL}$) for a Logic "1" and V_{OL} ($0.45V_{TTL}$) for a Logic "0". Input timing begins at V_{IH} ($2.0V_{TTL}$) and V_{IL} ($0.8V_{TTL}$). Output timing ends at V_{IH} and V_{IL}. Input rise and fall times (10% to 90%) < 10ns.

AC TESTING LOAD CIRCUIT(1)

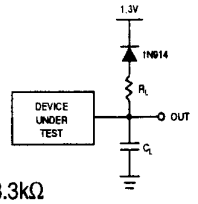

R_L=3.3kΩ
C_L=100pF
(C_L Includes Jig Capacitance)

HIGH SPEED
AC INPUT/OUTPUT REFERENCE WAVEFORM(2)

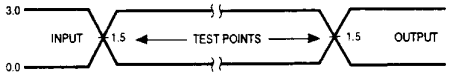

AC test inputs are driven at 3.0V for a Logic "1" and 0.0V for a Logic "0". Input timing begins, and output timing ends, at 1.5V. Input rise and fall times (10% to 90%) < 10ns.

HIGH SPEED
AC TESTING LOAD CIRCUIT(2)

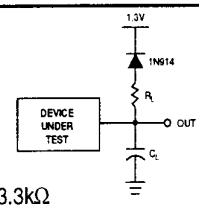

R_L=3.3kΩ
C_L=30pF
(C_L Includes Jig Capacitance)

NOTES:
1. Testing characteristics for LH28F008SA-85 in Standard configuration.
2. Testing characteristics for LH28F008SA-85 in High Speed configuration.

14. AC CHARACTERISTICS — Read-Only Operations(1)

Versions			V_{CC}=5V±0.25V	LH28F008SA-85(4)				Unit
			V_{CC}=5V±0.5V			LH28F008SA-85(5)		
Symbol		Parameter	Notes	Min.	Max.	Min.	Max.	
t_{AVAV}	t_{RC}	Read Cycle Time		85		90		ns
t_{AVQV}	t_{ACC}	Address to Output Delay			85		90	ns
t_{ELQV}	t_{CE}	CE# to Output Delay	2		85		90	ns
t_{PHQV}	t_{PWH}	RP# High to Output Delay			400		400	ns
t_{GLQV}	t_{OE}	OE# to Output Delay	2		40		45	ns
t_{ELQX}	t_{LZ}	CE# to Output Low Z	3	0		0		ns
t_{EHQZ}	t_{HZ}	CE# High to Output High Z	3		55		55	ns
t_{GLQX}	t_{OLZ}	OE# to Output Low Z	3	0		0		ns
t_{GHQZ}	t_{DF}	OE# High to Output High Z	3		30		30	ns
	t_{OH}	Output Hold from Addresses, CE# or OE# Change,Whichever is First	3	0		0		ns

NOTES:
1. See AC Input/Output Reference Waveform for timing measurements.
2. OE# may be delayed up to t_{CE}-t_{OE} after the falling edge of CE# without impact on t_{CE}.
3. Sampled, not 100% tested.
4. See High Speed AC Input/Output Reference Waveforms and High Speed AC Testing Load circuits for testing characteristics.
5. See AC Input/Output Reference Waveforms and AC Testing Load Circuits for testing characteristics.

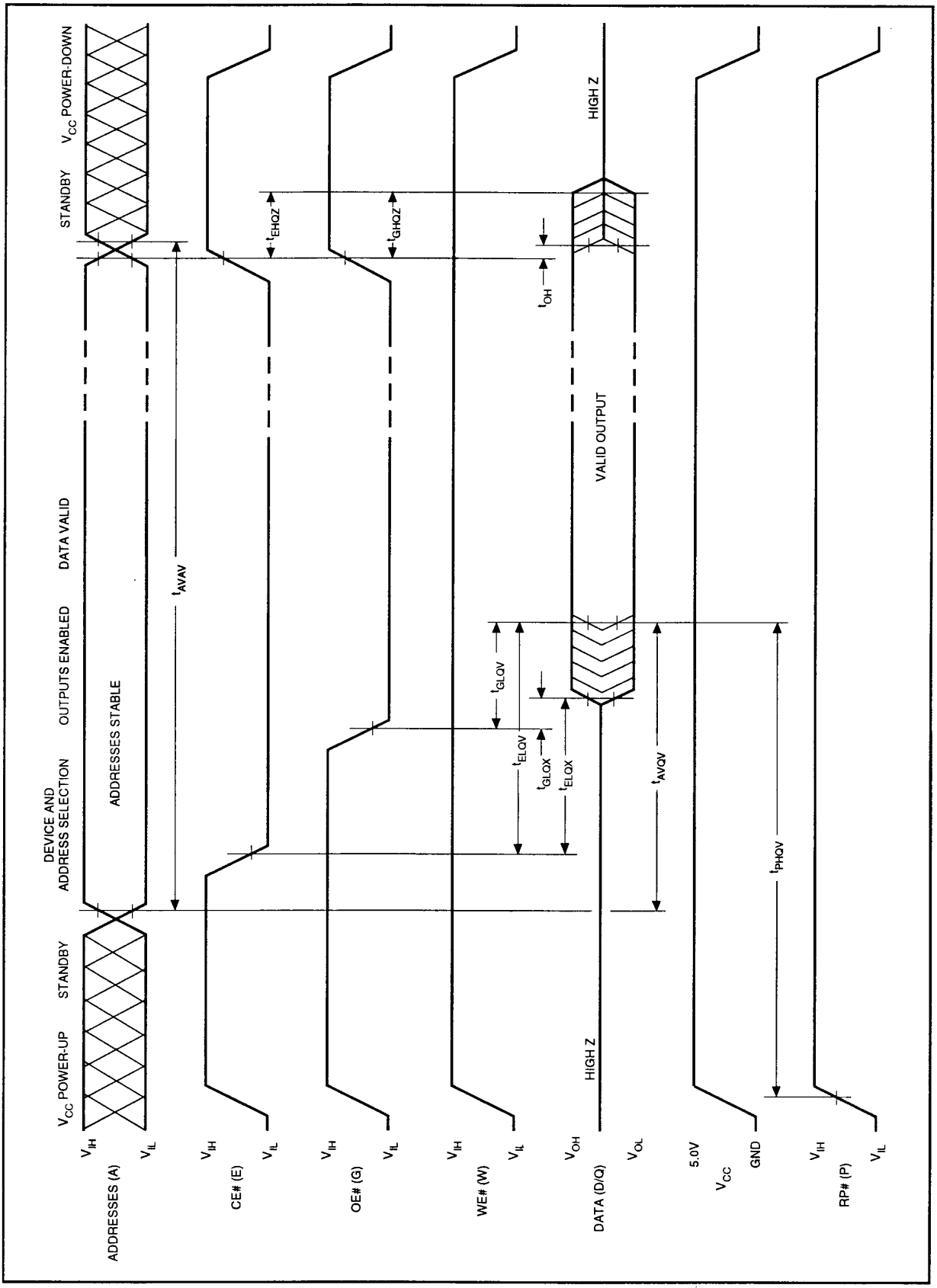

Figure 8. AC Waveform for Read Operations

AC CHARACTERISTICS - Write Operations[1]

Versions				V_{CC}=5V±0.25V	LH28F008SA-85[7]			Unit
				V_{CC}=5V±0.5V			LH28F008SA-85[8]	
Symbol		Parameter	Notes	Min.	Max.	Min.	Max.	
t_{AVAV}	t_{WC}	Write Cycle Time		85		90		ns
t_{PHWL}	t_{PS}	RP# High Recovery to WE# Going Low	2	1		1		µs
t_{ELWL}	t_{CS}	CE# Setup to WE# Going Low		0		0		ns
t_{WLWH}	t_{WP}	WE# Pulse Width		50		50		ns
t_{VPWH}	t_{VPS}	V_{PP} Setup to WE# Going High	2	100		100		ns
t_{AVWH}	t_{AS}	Address Setup to WE# Going High	3	40		40		ns
t_{DVWH}	t_{DS}	Data Setup to WE# Going High	4	40		40		ns
t_{WHDX}	t_{DH}	Data Hold from WE# High		5		5		ns
t_{WHAX}	t_{AH}	Address Hold from WE# High		5		5		ns
t_{WHEH}	t_{CH}	CE# Hold from WE# High		0		0		ns
t_{WHWL}	t_{WPH}	WE# Pulse Width High		25	.	25		ns
t_{WHRL}		WE# High to RY/BY# Going Low			100		100	ns
t_{WHQV1}		Duration of Byte Write Operation	5,6	6		6		µs
t_{WHQV2}		Duration of Block Erase Operation	5,6	0.3		0.3		s
t_{WHGL}		Write Recovery before Read		0		0		ns
t_{QVVL}	t_{VPH}	V_{PP} Hold from Valid SRD, RY/BY# High	2,6	0		0		ns

NOTES:

1. Read timing characteristics during erase and byte write operations are the same as during read-only operations. Refer to AC Characteristics for Read-Only Operations.
2. Sampled, not 100% tested.
3. Refer to Table 3 for valid A_{IN} for byte write or block erasure.
4. Refer to Table 3 for valid D_{IN} for byte write or block erasure.
5. The on-chip Write State Machine incorporates all byte write and block erase system functions and overhead of standard SHARP flash memory, including byte program and verify (byte write) and block precondition, precondition verify, erase and erase verify (block erase).
6. Byte write and block erase durations are measure to completion (SR.7=1, RY/ BY#=V_{OH}). V_{PP} should be held at V_{PPH} until determination of byte write/block erase success (SR.3/4/5=0).
7. See High Speed AC Input/Output Reference Waveforms and High Speed AC Testing Load Circuits for testing characteristics.
8. See AC Input/Output Reference Waveforms and AC Testing Load Circuits for testing characteristics.

15. BLOCK ERASE AND BYTE WRITE PERFORMANCE

Parameter	Notes	LH28F008SA			Unit
		Min.	Typ.(1)	Max.	
Block Erase Time	2		1.6	10	s
Block Write Time	2		0.6	2.1	s
Byte Write Time			8		µs

NOTES:

1. 25°C, 12.0V V_{PP}.
2. Excludes System-Level Overhead.

AC CHARACTERISTICS - Reset Operation

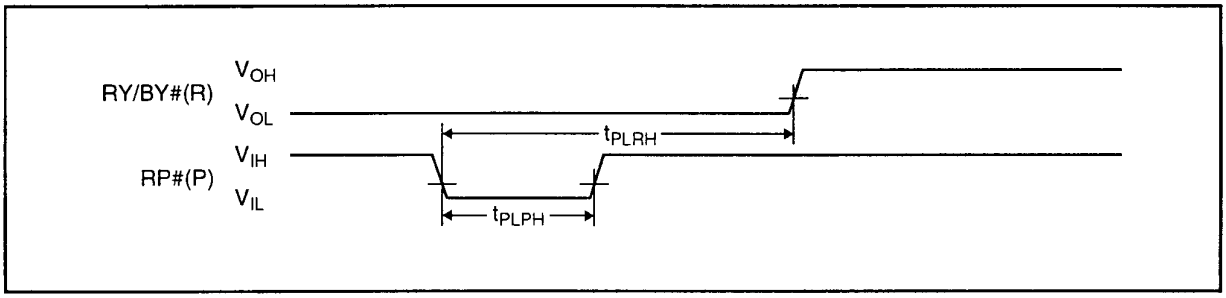

AC Waveform for Reset Operation

RESET AC Specifications

Sym.	Parameter	Notes	Min.	Max.	Unit
t_{PLPH}	RP# Pulse Low Time (If RP# is tied to V_{CC}, this specification is not applicable)		100		ns
t_{PLRH}	RP# Low to Reset during Block Erase or Byte Write (If RP# is tied to V_{CC}, this specification is not applicable)	1,2		12	µs

NOTES:

1. If RP# is asserted when the WSM is not busy (RY/BY# = "1"), the reset will complete within 100 ns.
2. A reset time, t_{PHQV}, is required from the latter of RY/BY# or RP# going high until outputs are valid.

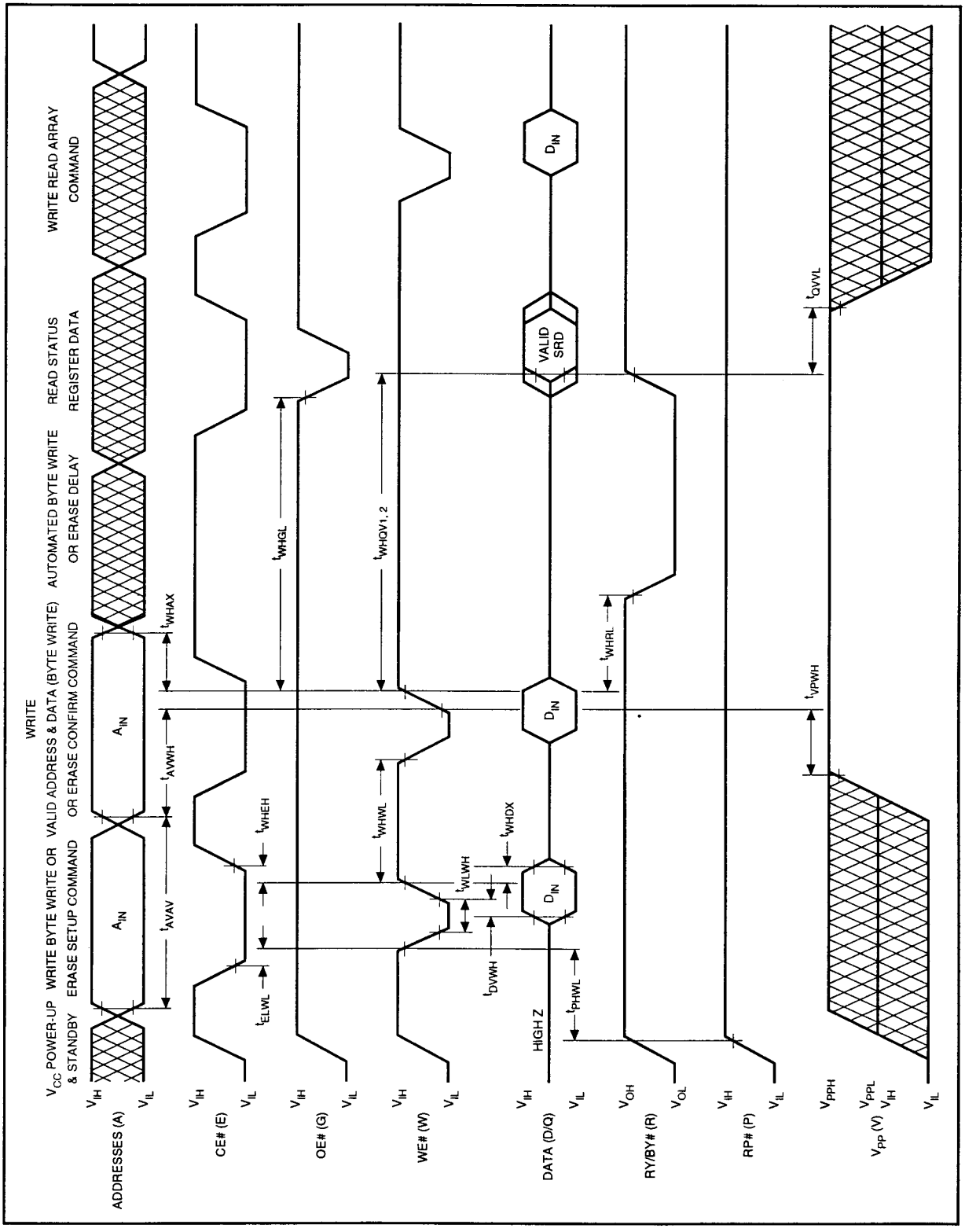

Figure 9. AC Waveform for Write Operations

16. ALTERNATIVE CE#-CONTROLLED WRITES[1]

Versions				V_{CC}=5V±0.25V	LH28F008SA-85[6]			Unit
				V_{CC}=5V±0.5V		LH28F008SA-85[7]		
Symbol		Parameter	Notes	Min.	Max.	Min.	Max.	
t_{AVAV}	t_{WC}	Write Cycle Time		85		90		ns
t_{PHEL}	t_{PS}	RP# High Recovery to CE# Going Low	2	1		1		µs
t_{WLEL}	t_{WS}	WE# Setup to CE# Going Low		0		0		ns
t_{ELEH}	t_{CP}	CE# Pulse Width		50		50		ns
t_{VPEH}	t_{VPS}	V_{PP} Setup to CE# Going High	2	100		100		ns
t_{AVEH}	t_{AS}	Address Setup to CE# Going High	3	40		40		ns
t_{DVEH}	t_{DS}	Data Setup to CE# Going High	4	40		40		ns
t_{EHDX}	t_{DH}	Data Hold from CE# High		5		5		ns
t_{EHAX}	t_{AH}	Address Hold from CE# High		5		5		ns
t_{EHWH}	t_{WH}	WE# Hold from CE# High		0		0		ns
t_{EHEL}	t_{EPH}	CE# Pulse Width High		25		25		ns
t_{EHRL}		CE# High to RY/BY# Going Low			100		100	ns
t_{EHQV1}		Duration of Byte Write Operation	5	6		6		µs
t_{EHQV2}		Duration of Block Erase Operation	5	0.3		0.3		s
t_{EHGL}		Write Recovery before Read		0		0		ns
t_{QVVL}	t_{VPH}	V_{PP} Hold from Valid SRD, RY/BY# High	2,5	0		0		ns

NOTES:

1. Chip-Enable Controlled Writes: Write operations are driven by the valid combination of CE# and WE#. In systems where CE# defines the write pulsewidth (within a longer WE# timing waveform), all setup, hold and inactive WE# times should be measured relative to the CE# waveform.
2. Sampled, not 100% tested.
3. Refer to Table 3 for valid A_{IN} for byte write or block erasure.
4. Refer to Table 3 for valid D_{IN} for byte write or block erasure.
5. Byte write and block erase durations are measured to completion (SR.7=1, RY/BY#=V_{OH}). V_{PP} should be held at V_{PPH} until determination of byte write/block erase success (SR.3/4/5=0).
6. See High Speed AC Input/Output Reference Waveforms and High Speed AC Testing Load Circuits for testing characteristics.
7. See AC Input/Output Reference Waveforms and AC Testing Load Circuits for testing characteristics.

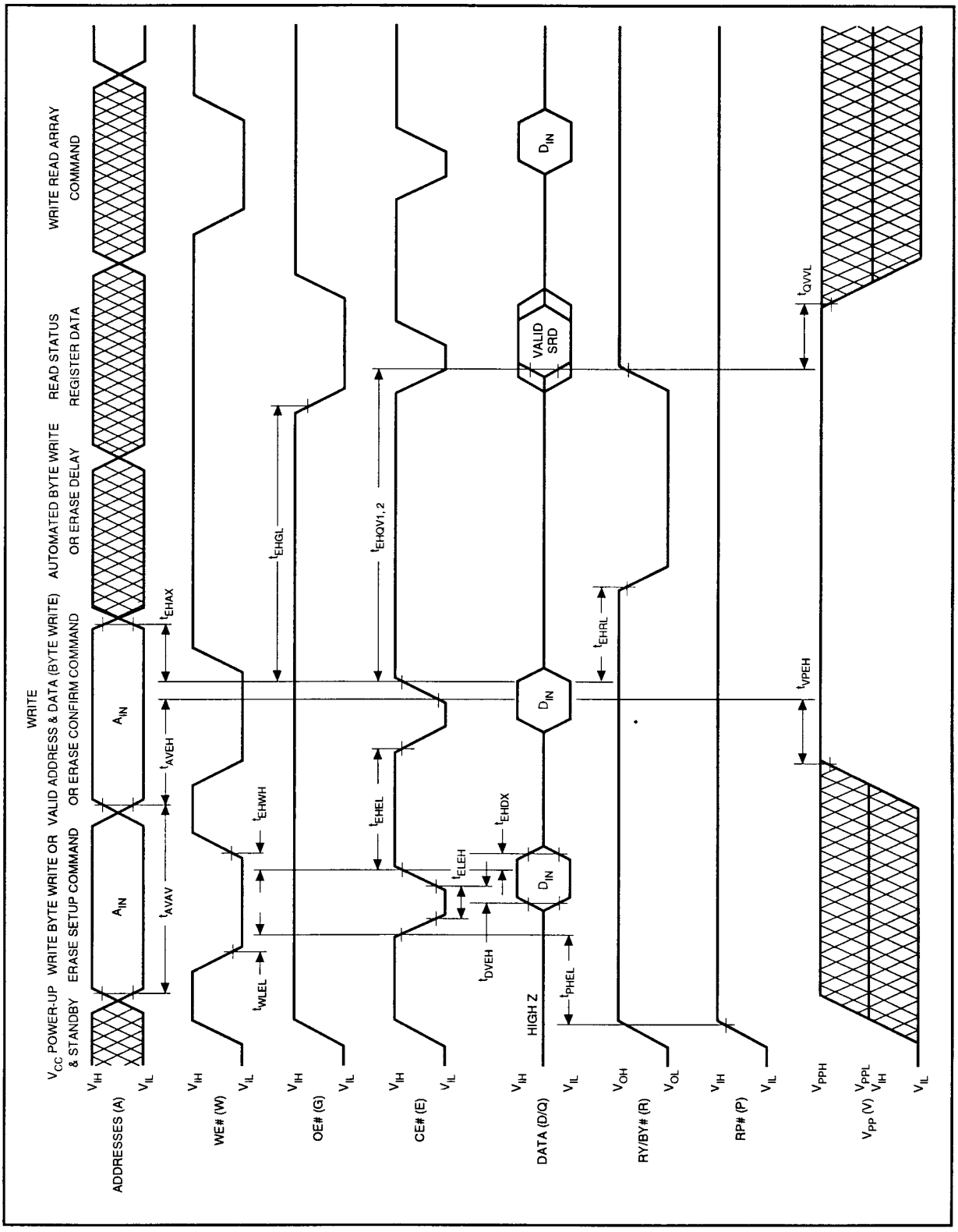

Figure 10. AC Waveform for Write Operations

17 Package and packing specification

1. Package Outline Specification

Refer to drawing No.AA1105

2. Markings

2−1. Marking contents

(1) Product name : LH28F008SAT−85

(2) Company name : SHARP

(3) Date code

(Example) YY WW ×××

Indicates the product was manufactured in the WWth week of 19YY.

→ Denotes the production ref.code(1~3)

→ Denotes the production week. (01,02,03, ・・・・・52,53)

→ Denotes the production year. (Lower two digits of the year.)

(4) The marking of "JAPAN" indicates the country of origin.

2−2. Marking layout

Refer drawing No.AA1105

(This layout does not define the dimensions of marking character and marking position.)

3. Packing Specification (Dry packing for surface mount packages)

Dry packing is used for the purpose of maintaining IC quality after mounting packages on the PCB (Printed Circuit Board).

When the epoxy resin which is used for plastic packages is stored at high humidity, it may absorb 0.15% or more of its weight in moisture. If the surface mount type package for a relatively large chip absorbs a large amount of moisture between the epoxy resin and insert material (e.g. chip, lead frame) this moisture may suddenly vaporize into steam when the entire package is heated during the soldering process (e.g. VPS). This causes expansion and results in separation between the resin and insert material, and sometimes cracking of the package. This dry packing is designed to prevent the above problem from occurring in surface mount packages.

3−1. Packing Materials

Material Name	Material Specificaiton	Purpose
Tray	Conductive plastic (50devices/tray)	Fixing of device
Upper cover tray	Conductive plastic (1tray/case)	Fixing of device
Laminated aluminum bag	Aluminum polyethylene (1bag/case)	Drying of device
Desiccant	Silica gel	Drying of device
P P band	Polypropylene (3pcs/case)	Fixing of tray
Inner case	Card board (500devices/case)	Packaging of device
Label	Paper	Indicates part number, quantity and date of manufacture
Outer case	Card board	Outer packing of tray

(Devices shall be placed into a tray in the same direction.)

3－2. Outline dimension of tray
Refer to attached drawing

4. Storage and Opening of Dry Packing

4－1. Store under conditions shown below before opening the dry packing
(1) Temperature range : 5～40℃
(2) Humidity : 80% RH or less

4－2. Notes on opening the dry packing
(1) Before opening the dry packing, prepare a working table which is grounded against ESD and use a grounding strap.
(2) The tray has been treated to be conductive or anti-static. If the device is transferred to another tray, use a equivalent tray.

4－3. Storage after opening the dry packing
Perform the following to prevent absorption of moisture after opening.
(1) After opening the dry packing, store the ICs in an environment with a temperature of 5～25℃ and a relative humidity of 60% or less and mount ICs within 72 hours after opening dry packing.

4－4. Baking (drying) before mounting
(1) Baking is necessary
(A) If the humidity indicator in the desiccant becomes pink
(B) If the procedure in section 4－3 could not be performed
(2) Recommended baking conditions
If the above conditions (A) and (B) are applicable, bake it before mounting. The recommended conditions are 16~24 hours at 120℃.
Heat resistance tray is used for shipping tray.

5. Surface Mount Conditions
Please perform the following conditions when mounting ICs not to deteriorate IC quality.

5－1.Soldering conditions(The following conditions are valid only for one time soldering.)

Mounting Method	Temperature and Duration	Measurement Point
Reflow soldering (air)	Peak temperature of 230℃ or less, duration of less than 15 seconds. 200℃ or over,duration of less than 40 seconds. Temperature increase rate of 1～4℃/second	IC package surface
Manual soldering (soldering iron)	260℃ or less, duration of less than 10 seconds.	IC outer lead surface

5－2. Conditions for removal of residual flux
(1) Ultrasonic washing power : 25 Watts/liter or less
(2) Washing time : Total 1 minute maximum
(3) Solvent temperature : 15～40℃

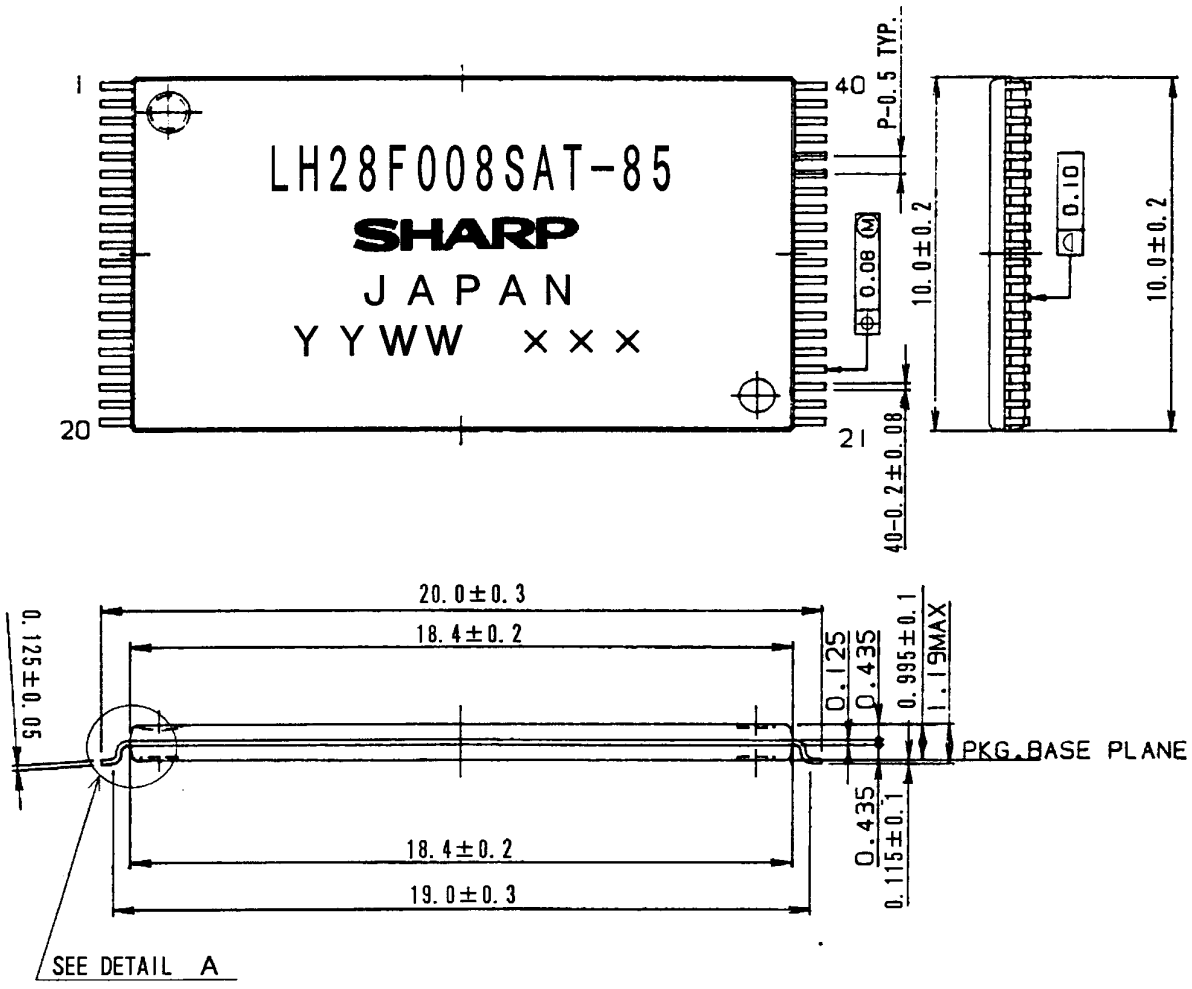

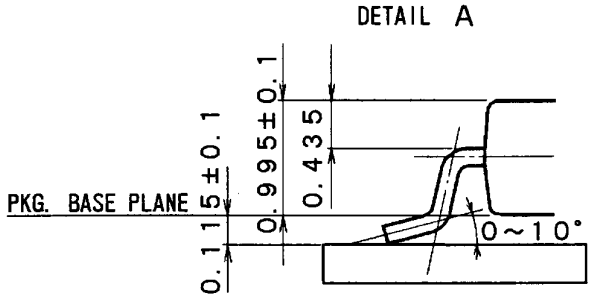

名称 NAME	TSOP40-P-1020	リード仕上 LEAD FINISH	TIN-LEAD PLATING	備考 プラスチックパッケージ外形寸法は、バリを含まないものとする。 NOTE Plastic body dimensions do not include burr of resin.
DRAWING NO.	AA1105	単位 UNIT	mm	

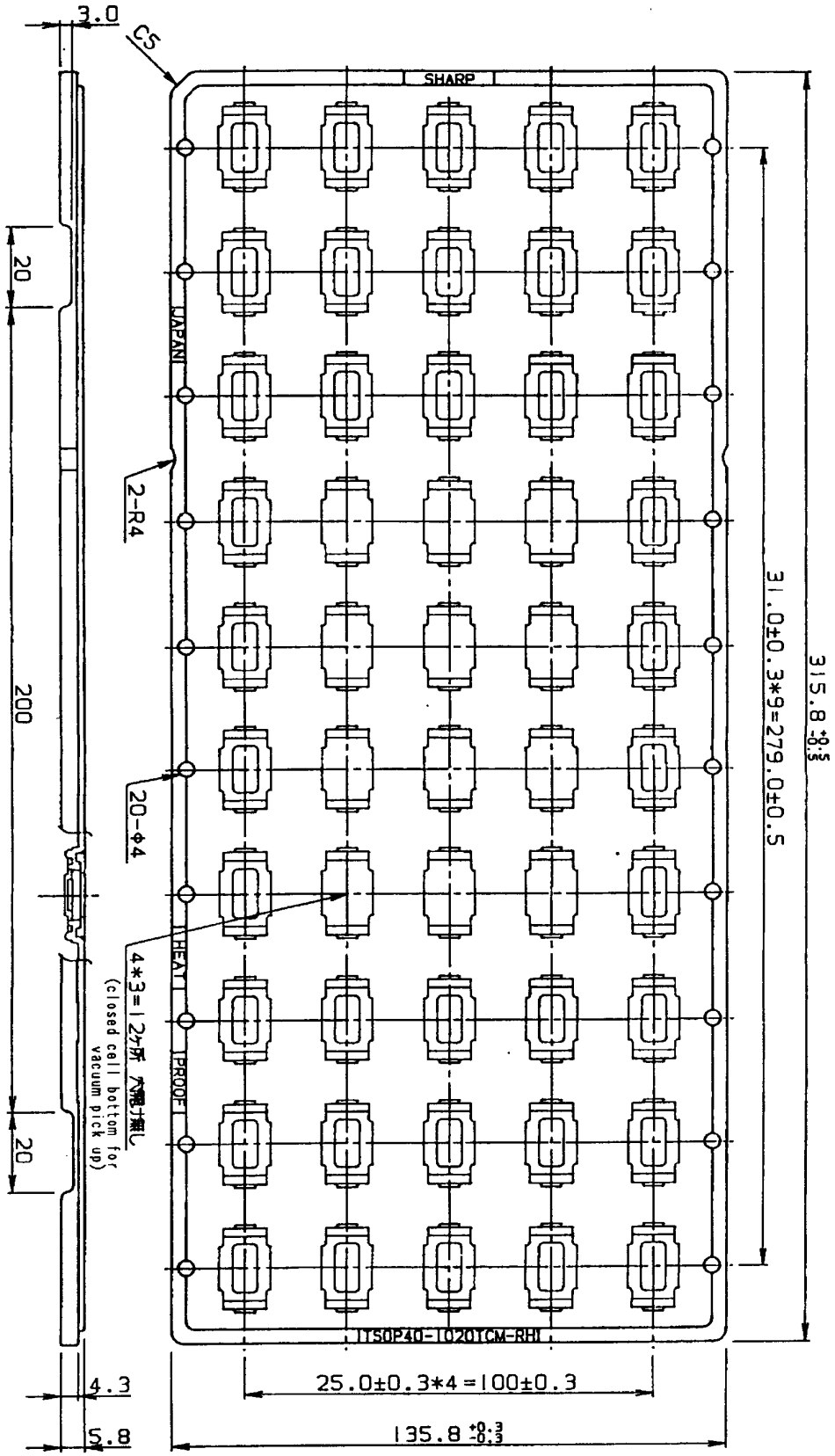

名称 NAME	TSOP40−1020TCM−RH			備考 NOTE
DRAWING NO.	CV644	単位 UNIT	mm	

Flash memory LHF08SXX family Data Protection

Noises having a level exceeding the limit specified in the specification may be generated under specific operating conditions on some systems.
Such noises, when induced onto WE# signal or power supply, may be interpreted as false commands, causing undesired memory updating.
To protect the data stored in the flash memory against unwanted overwriting, systems operating with the flash memory should have the following write protect designs, as appropriate:

1) Data protection through Vpp
When the level of Vpp is lower than VPPL (lockout voltage), write operation on the flash memory is disabled. All blocks are locked and the data in the blocks are completely write protected.
For the lockout voltage, refer to the specification. (See chapter 3, 4, 5, 7, 8 and 12)

2) Data protection through RP#
When the RP# is kept low during power up and power down sequence such as voltage transition, write operation on the flash memory is disabled, write protecting all blocks.
For the details of RP# control, refer to the specification. (See chapter 3, 4, 7, 8 and 9)

LH28F008SAT-85, FLASH MEMORY, FLASH, NON-VOLATILE MEMORY, FLASH ROM READ ONLY MEMORY, ETOX, 8 Mb