LED SMD

Lead-Free Pa

LG-195-9UG/DBK-CT

DATA SHEET

DOC. NO : QW0905-LG-195-9UG/DBK-CT

REV: A

DATE : 15- Nov. - 2012

發行
立碁電子
DCC

Features:

1. Package in 8.0mm carrier tape on 7" diameter reel.

2. Compatible with automatic placement equipment.

3. Compatible with infrared and vapor phase reflow solder process.

Descriptions:

1. The LG-195-9UG/HRF SMD Taping is much smaller than lead frame type components, thus enable smaller board size, higher packing density, reduced storage space and finally smaller equipment to be obtained.

2. Besides, lightweight makes them ideal for miniature applications. etc.

Applications:

1. Automotive : backlighting in dashboard and switch.

2. Telecommunication : indicator and backlighting in telephone and fax.

3. Flat backlight for LCD, switch and symbol

4. General use.

Device Selection Guide:

PART NO	MATERIAL	COLOR	
		Emitted	Lens
LG-195-9UG/DBK-CT	AlGaInP	Green	Water Clear
	InGaN	Blue	

Package Dimensions

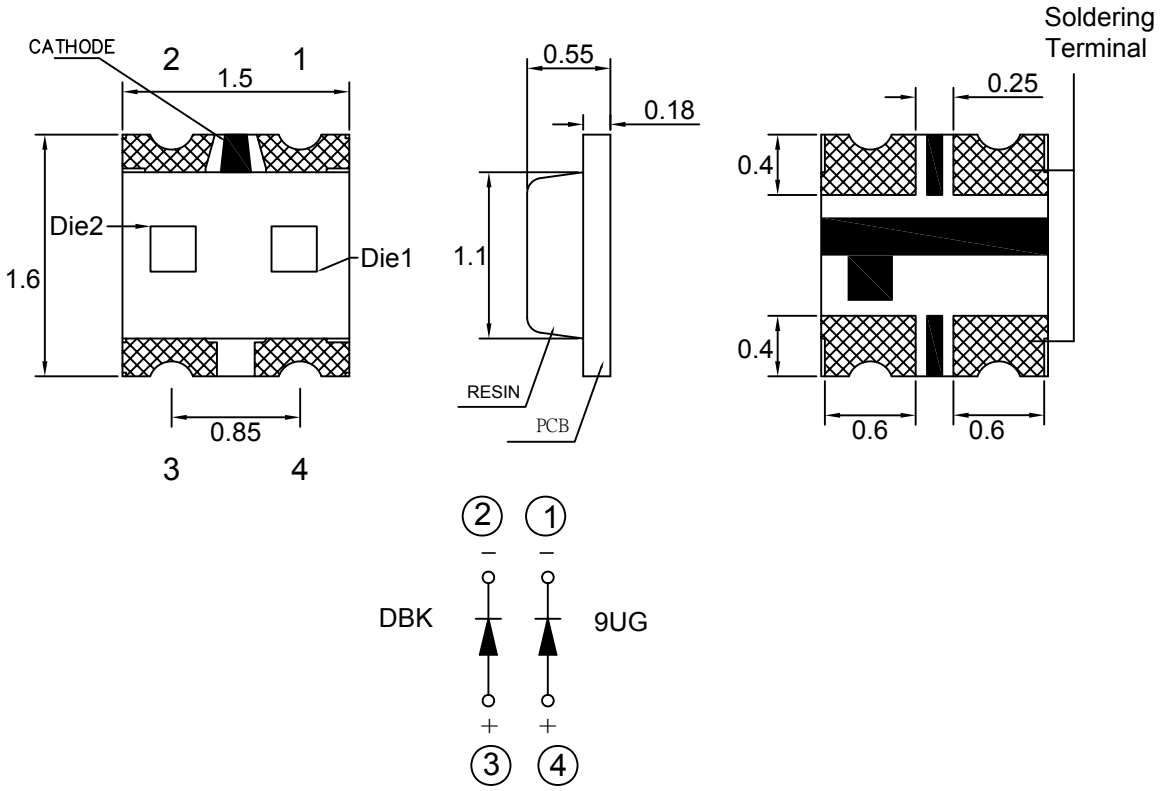

Note : 1.All dimension are in millimeter tolerance is ±0.1mm unless otherwise noted.
2.Specifications are subject to change without notice.

Recommended Soldering Pad Dimensions

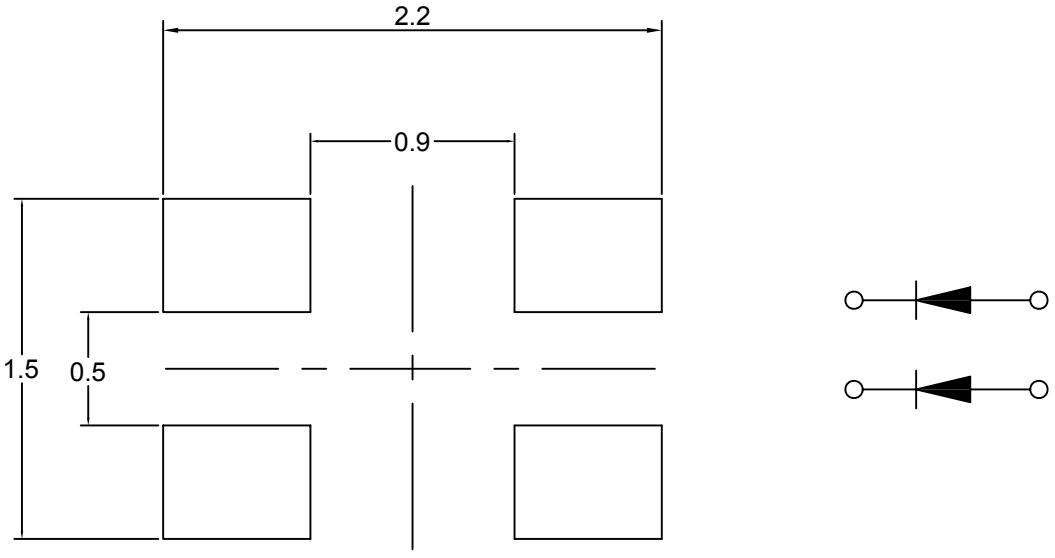

Note : The tolerances unless mentioned is ±0.1mm,Angle±0.5. Unit=mm.

Absolute Maximum Ratings at Ta=25℃

Parameter	Symbol	Ratings		UNIT
		9UG	DBK	
Power Dissipation	PD	78	120	mW
Peak Forward Current Duty 1/10@10KHz	I_{FP}	60	100	mA
Forward Current	I_F	30	30	mA
Reverse Current @5V	Ir	10	10	μA
Electrostatic Discharge	ESD	2000	500	V
Operating Temperature	T_{opr}	-20 ~ +80		℃
Storage Temperature	Tstg	-30 ~ +100		℃

Typical Electrical & Optical Characteristics (Ta=25℃)

Items	Symbol		Min.	Typ.	Max.	UNIT	CONDITION
Luminous Intensity	Iv	9UG	20	50	----	mcd	IF=20mA
		DBK	50	125	----		
Peak Wavelength	λP	9UG	----	575	----	nm	IF=20mA
		DBK	----	465	----		
Dominant Wavelength	λD	9UG	----	574	----	nm	IF=20mA
		DBK	----	470	----		
Spectral Line Half-Width	△λ	9UG	----	20	----	nm	IF=20mA
		DBK	----	30	----		
Forward Voltage	V_F	9UG	1.7	----	2.6	V	IF=20mA
		DBK	2.8	----	3.6		
Viewing Angle	2θ 1/2	9UG	----	130	----	deg	IF=20mA
		DBK	----	130	----		

Note : 1.The forward voltage data did not including ±0.1V testing tolerance.
2. The luminous intensity data did not including ±15% testing tolerance.

BIN CODE LIST

BIN CODE		Iv(mcd) at 5mA	
		Min.	Max.
9UG	M	20	32
	N	32	50
	P	50	80
	Q	80	125

BIN CODE		Iv(mcd) at 5mA	
		Min.	Max.
DBK	P	50	80
	Q	80	125
	R	125	200

Dominant Wavelength Classification

BIN CODE		λD(nm) at 20mA	
		Min.	Max.
9UG	6	566	568
	7	568	570
	8	570	572
	9	572	574
	10	574	576

BIN CODE		λD(nm) at 20mA	
		Min.	Max.
DBK	0D	465	468
	0C	468	471
	0B	471	474
	0A	474	477

Typical Electro-Optical Characteristics Curve

9UG CHIP

Fig.1 Forward current vs. Forward Voltage

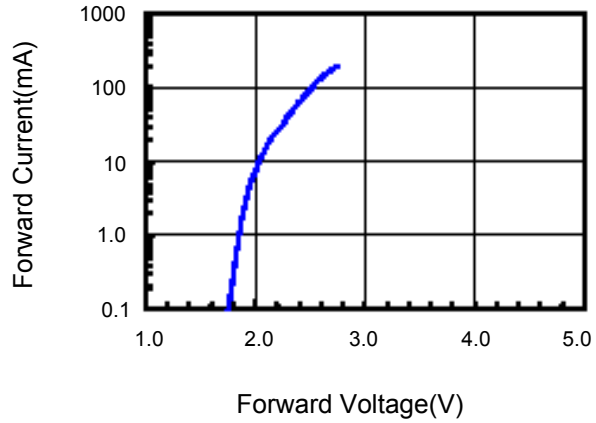

Fig.2 Relative Intensity vs. Forward Current

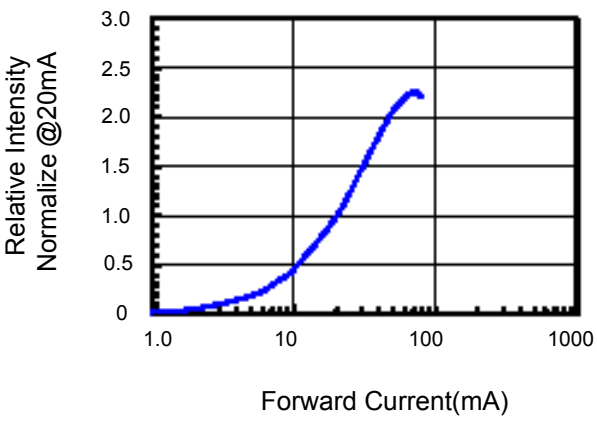

Fig.3 Forward Voltage vs. Temperature

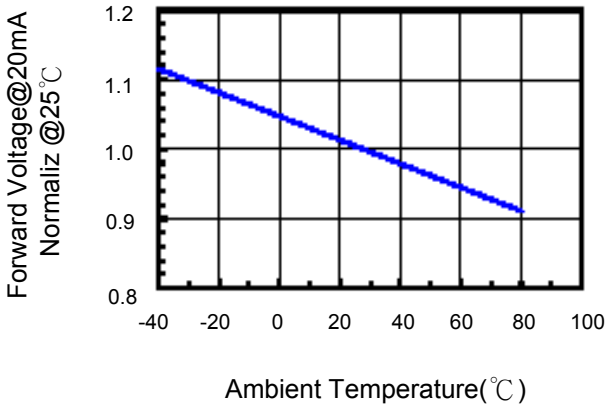

Fig.4 Relative Intensity vs. Temperature

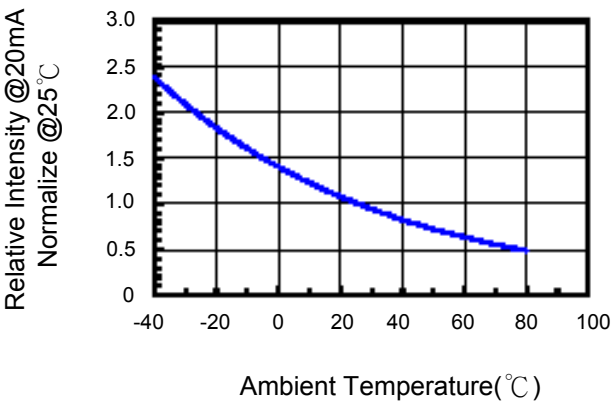

Fig.5 Relative Intensity vs. Wavelength

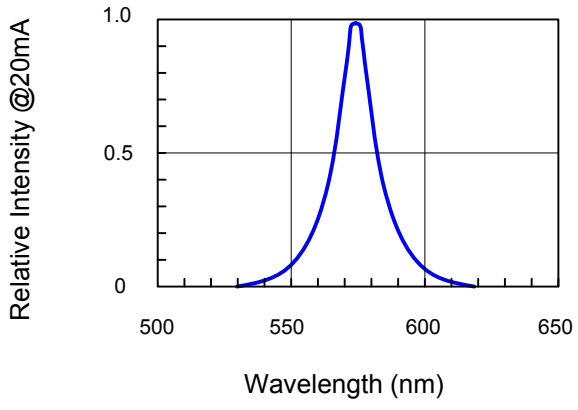

Fig.6 Directive Radiation

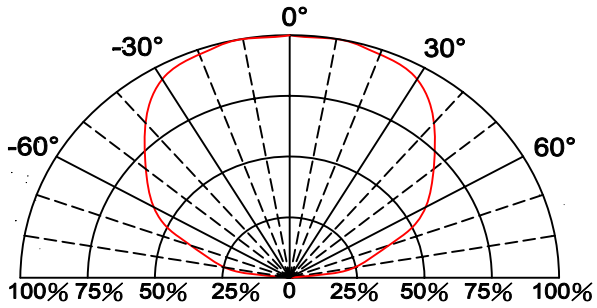

Typical Electro-Optical Characteristics Curve

DBK CHIP

Fig.1 Forward current vs. Forward Voltage

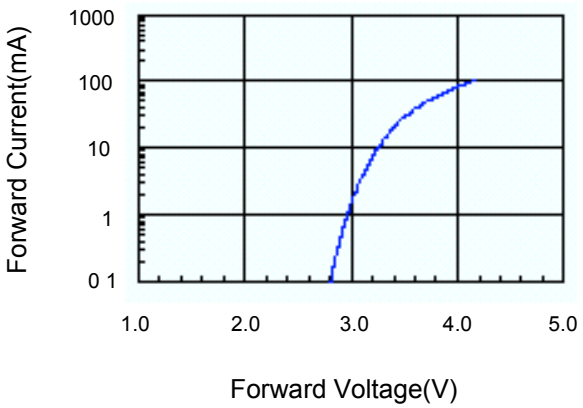

Fig.2 Relative Intensity vs. Forward Current

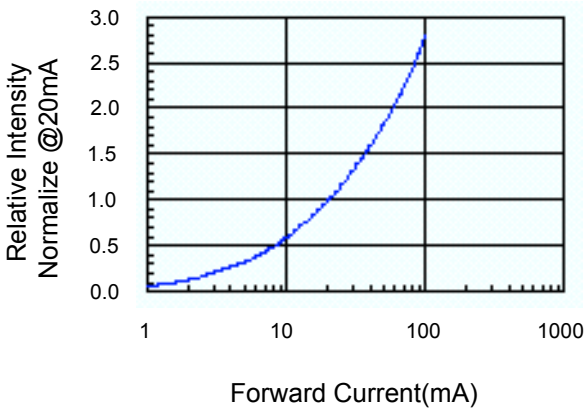

Fig.3 Forward Voltage vs. Temperature

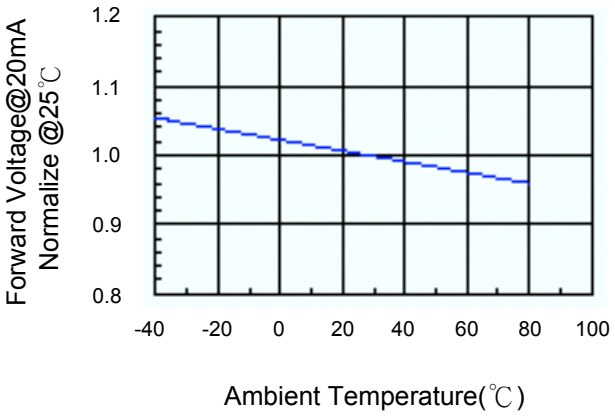

Fig.4 Relative Intensity vs. Temperature

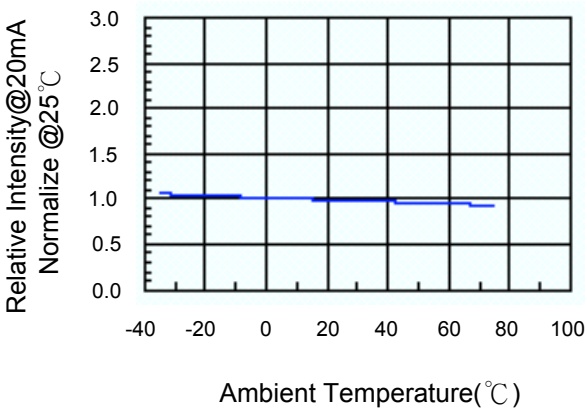

Fig.5 Relative Intensity vs. Wavelength

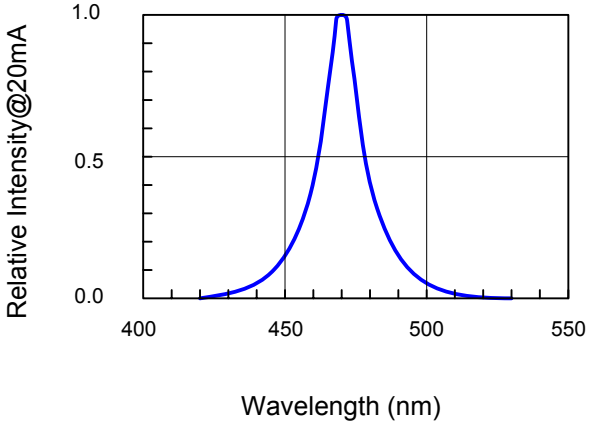

Fig.6 Directive Radiation

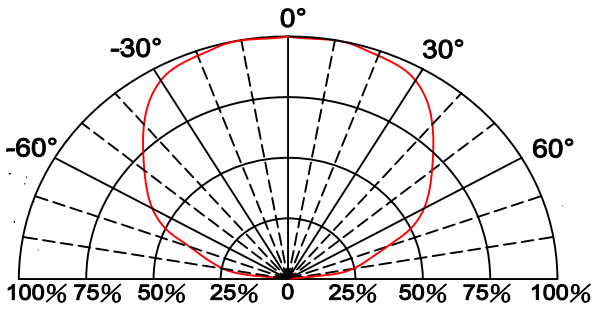

Carrier Tape Dimensions

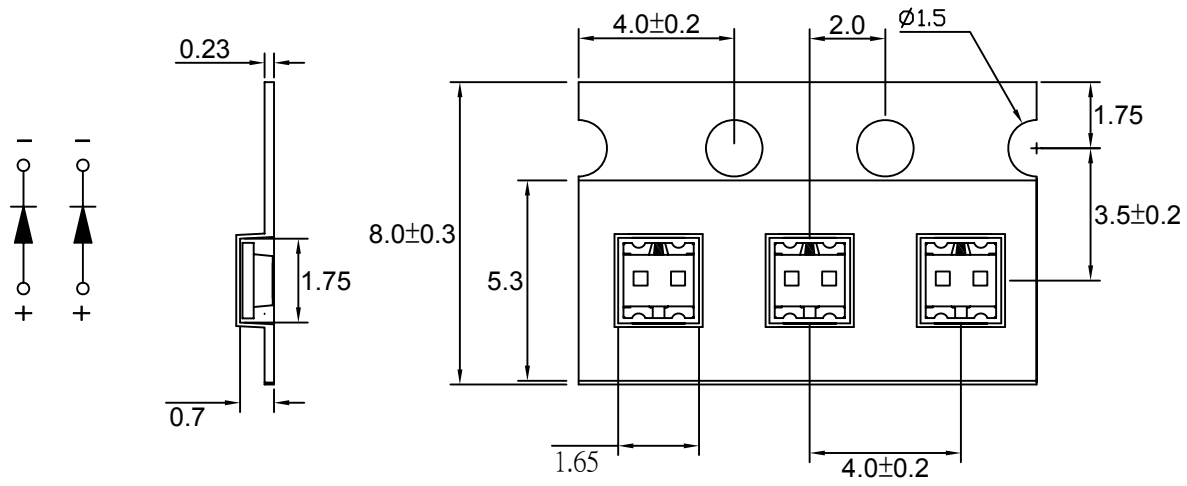

Note : The tolerances unless mentioned is ±0.1mm,Angle± 0.5. Unit=mm.

• Packing Specifications

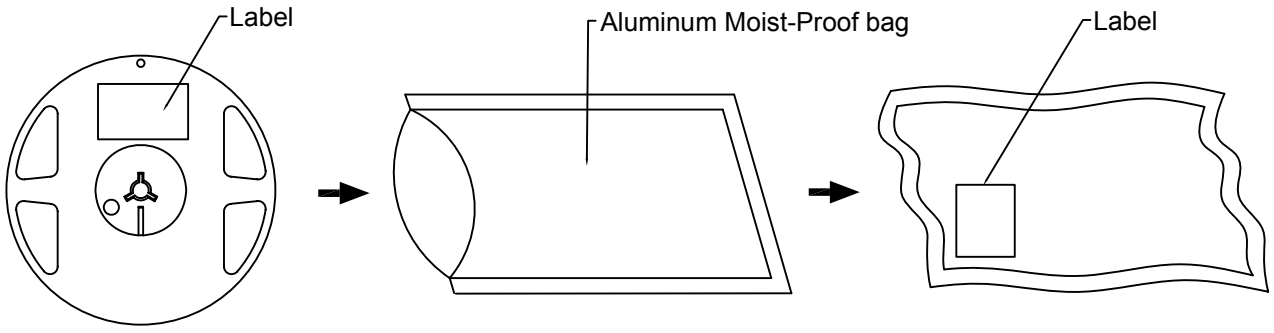

Part No.	Description	Quantity/Reel
LG-195-9UG/DBK-CT	8.0mm tape,7"reel	4000 devices

Label Explanation

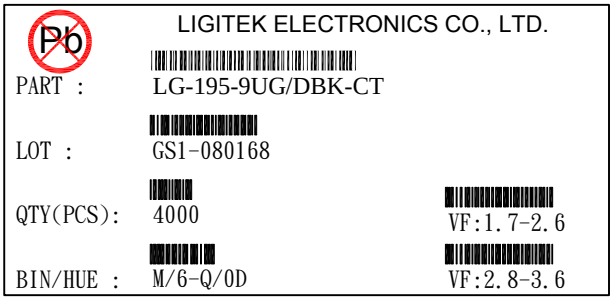

BIN : Luminous Intensity

HUE : Dominant Wavelength

VF :Forward Voltage

Reel Dimensions

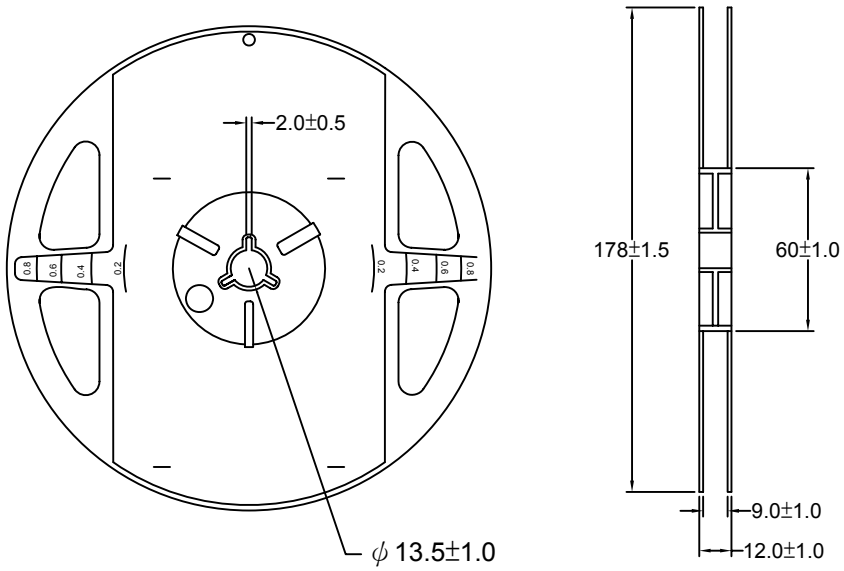

Box Explanation

1. 5 BAG / INNER BOX
2. INNER BOX SIZE : L X W X H 23cm X 8.5cm x 26cm

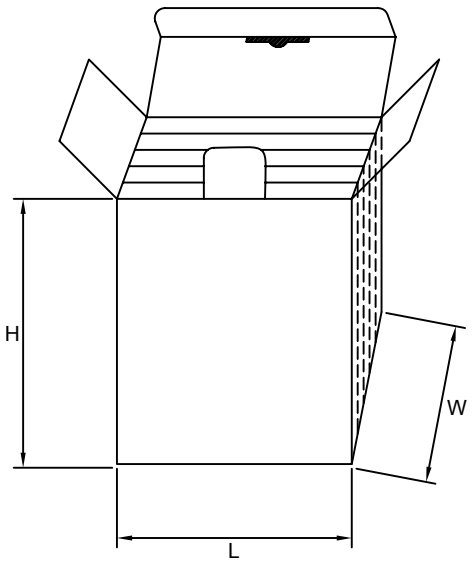

3. 10 INNER BOXES / CARTON
4. CARTON SIZE : L X W X H 58cm X 34cm x 35cm

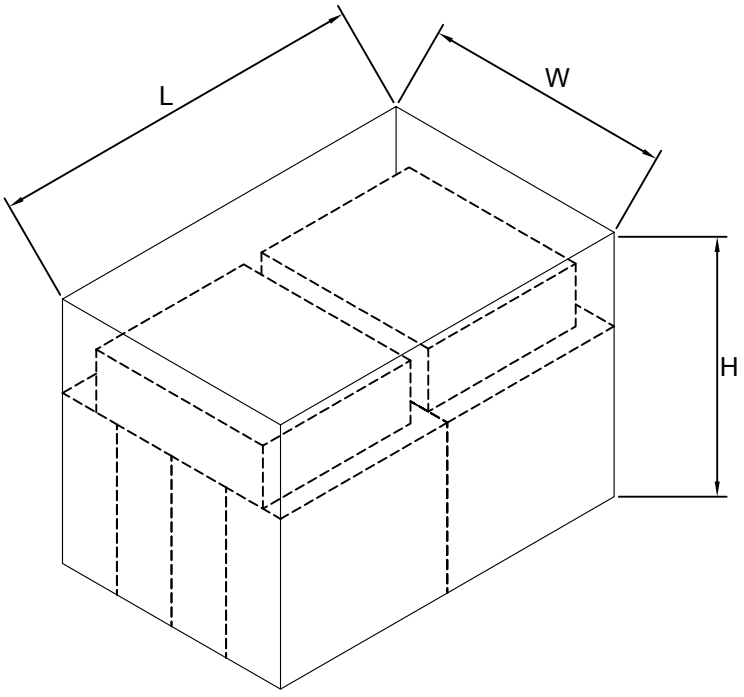

Recommended Soldering Conditions

1. Hand Solder

Basic spec is ≦ 280℃ 3 sec one time only.

2. Wave Solder

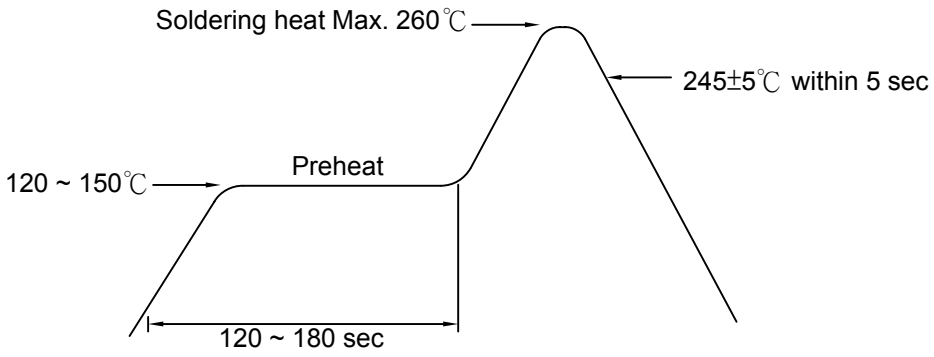

3. PB-Free Reflow Solder

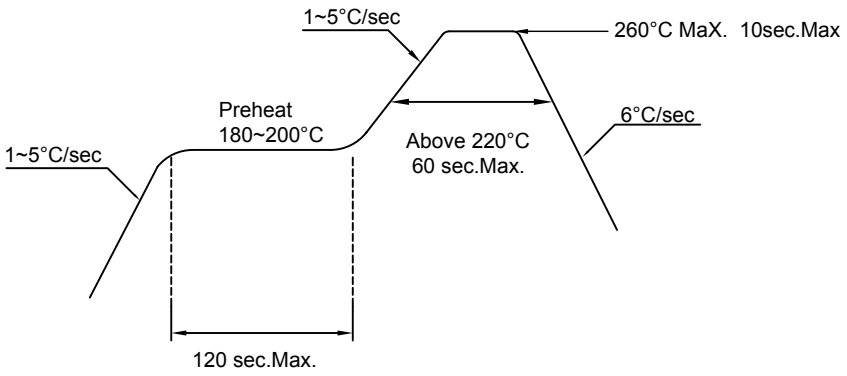

Note:

1.Reflow soldering should not be done more than two times.

2.When soldering,do not put stress on the LEDs during heating.

3.After soldering,do not warp the circuit board.

Precautions For Use:

Storage time:

1.The operation of Temperatures and RH are : 5℃~35℃,RH60%.

2.Once the package is opened, the products should be used within a week.
Otherwise, they should be kept in a damp proof box with descanting agent.
Considering the tape life, we suggest our customers to use our products within a year at ＜30℃ and ＜90% relative humidity(RH). (from production date).

3.If opened more than one week in an atmosphere 5℃ ~ 35℃,RH60%,
they should be treated at 60℃±5 ℃fo r 15hrs.

Drive Method:

LED is a current operated device, and therefore, requirer some kind of current limiting incorporated into the driver circuit. This current limiting typically takes the form of a current limiting resistor placed in series with the LED.
Consider worst case voltage variations than could occur across the current limiting resistor. The forward current should not be allowed to change by more than 40% of its desired value.

Circuit model A

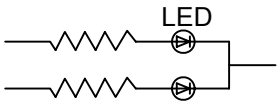

Circuit model B

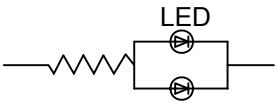

(A) Recommended circuit.
(B) The difference of brightness between LED could be found due to the VF-IF characteristics of LED.

Cleaning:

Use alcohol-based cleaning solvents such as isopropyl alcohol to clean the LED.

ESD(Electrostatic Discharge):

Static Electricity or power surge will damage the LED. Use of a conductive wrist band or anti-electrosatic glove is recommended when handing these LED. All devices, equipment and machinery must be properly grounded.

Reliability Test:

Classification	Test Item	Test Condition	Reference Standard
Endurance Test	Operating Life Test	1.Ta=Under Room Temperature As Per Data Sheet Maximum Rating. 2.If=20mA 3.t=1000 hrs (-24hrs, +72hrs)	MIL-STD-750D: 1026 MIL-STD-883D: 1005 JIS C 7021: B-1
	High Temperature Storage Test	1.Ta=105℃±5℃ 2.t=1000 hrs (-24hrs, +72hrs)	MIL-STD-883D:1008 JIS C 7021: B-10
	Low Temperature Storage Test	1.Ta=-40℃±5℃ 2.t=1000 hrs (-24hrs, +72hrs)	JIS C 7021: B-12
	High Temperature High Humidity Storage Test	1.Ta=65℃±5℃ 2.RH=90%~95% 3.t=1000hrs¡Ó2hrs	MIL-STD-202F:103B JIS C 7021: B-11
Environmental Test	Thermal Shock Test	1.Ta=105℃±5℃&-40℃±5℃ (10min) (10min) 2.total 10 cycles	MIL-STD-202F: 107D MIL-STD-750D: 1051 MIL-STD-883D: 1011
	Solderability Test	1.T.Sol=235℃±5℃ 2.Immersion time 2±0.5sec 3.Coverage ≧95% of the dipped surface	MIL-STD-202F: 208D MIL-STD-750D: 2026 MIL-STD-883D: 2003 IEC 68 Part 2-20 JIS C 7021: A-2
	Temperature Cycling	1.105℃ ~ 25℃ ~ -55℃ ~ 25℃ 30mins 5mins 30mins 5mins 2.10 Cyeles	MIL-STD-202F: 107D MIL-STD-750D: 1051 MIL-STD-883D: 1010 JIS C 7021: A-4
	IR Reflow	1.T=260°C Max. 10sec.Max. 2. 6 Min	MIL-STD-750D:2031.2 J-STD-020