2019-V1.0-0307

Specifications

Constant Voltage LED Power Supplies

LFEU60-V Series, 60W

PAIRUI ELECTRONICS
No. 545 Museum Road
Yangzhou, Jiangsu
China 225009
Tel: 86 (514) 8279 1592
Fax: 86 (514) 8769 3159

2019

LED Power Supplies for Outdoor Use

LFEU60-V SERIES, 60WATT, IP65/IP44 RATING

Features

- 3 Year Warranty
- Universal Input Voltage Range: 100~240Vac
- Constant Voltage Output Mode
- Waterproof Rating IP65/IP44
- Built-in Active Power Factor Correction
- Class II Power, no FG
- All Round Protections: Short Circuit, Over Voltage, Over Current





CE

Applications

- ✓ Garden Light
- ✓ Landscape Light
- ✓ Strip Light
- ✓ Cabinet Light
- ✓ Other Indoor and Outdoor used Lights

Electrical

LFE U 60 - V 24 - C3

Wire Connection
C3 = Slim wires
D3 = Heavy wires

Output Voltage(Vdc)

Output Mode
V = Constant Voltage Mode

Output Power(W)

Input Voltage Range
U = 100-240Vac

Series Name

Electrical

Part Number	Nominal Input Voltage	Output Voltage Output Current	Ripple	Efficiency	Certificate
LFEU60-V12-C3 LFEU60-V12-D3	100-240VAC	12V(0-4A)	20%	82%	CE, CCC
LFEU60-V24-C3 LFEU60-V24-D3	100-240VAC	24V(0-2.5A)	20%	86%	CE, CCC
LFEU60-V36-C3 LFEU60-V36-D3	100-240VAC	36V(0-1.67A)	20%	88%	CE, CCC
LFEU60-V48-C3 LFEU60-V48-D3	100-240VAC	48V(0-1.25A)	20%	90%	CE, CCC

NOTE:1. Other output models are may available on request;
2.Above models are suitable for indoor or outdoor environment without direct sunlight exposure, avoid immerse in the water for more than 30 minutes.

INPUT

PARAMETER	CONDITIONS	MIN	TYP	MAX	UNITS
Input frequency		47		63	Hz
Input current	Full load, Vin=230Vac		0.73		A
Inrush current	Cold start, Vin=230Vac			50	A
Power factor(PF)	Full load, Vin=230Vac		0.94		
Surge voltage	L-N		2		KV

OUTPUT

PARAMETER	CONDITIONS	MIN	TYP	MAX	UNITS
Output voltage accuracy			±5		%
Line regulation	Vin from 100Vac to 240Vac		±5		%
Load regulation	Vout from min. to max.		±5		%
Turn-on delay time	Full load, cold start, power on		1000		ms
Ripple	Please refer to below measuring method		20%Vo		mVp-p
THD	Output load (Full load)			20	%

NOTE: The values are measured at 20MHz of bandwidth by using a 12'' twisted pair-wire terminated with 0.1uF & 47uF parallel capacitor under ambient temperature 25℃ at rated input voltage and rated load.

Protection

Short circuit	In hiccup mode, it will recover automatically after fault condition is removed
Over voltage	110-150% Vout, it will recover automatically after fault condition is removed
Over current	In hiccup mode, it will recover automatically after fault condition is removed

Environment

PARAMETER	CONDITIONS	MIN	TYP	MAX	UNITS
Ambient operating temperature	Startup at rated voltage (Derating required)	-25		+50	℃
Operating relative humidity	Non condensing	20		90	%
Storage temperature	Humidity 10 ~ 95% RH	-40		+80	℃
Maximum case temperature	Hot-spot on case			+75	℃
Lifetime	Full load, 220Vac input, 25℃ ambient temperature	30			Khrs
Waterproof rating	Slim wire IP44 | Heavy wire IP65				
Dimension(LxWxH)	165.4 x 42.0 x 31.5mm				
Weight	400g				

Safety/EMC

Safety	Design refer to UL8750, EN61347, EN61347-2-13
EMC	Compliance to EN55015, FCC Part 15 Class B, EN61000-3-2, EN61000-3-3, EN61000-4-2, 3, 4, 6, 8, 11, EN61547

NOTE: Unless otherwise specified, all the above parameters are measured at ambient temperature of 25℃ and Vin=100Vac to 240Vac.

Mechanical

Heavy wires

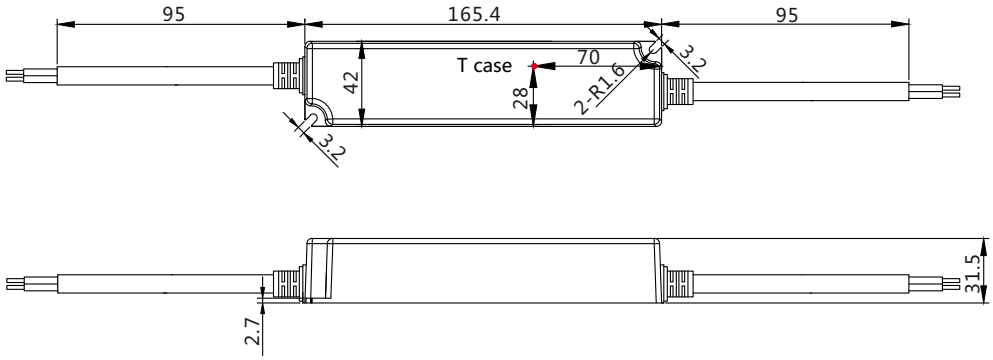

Unit: mm

Slim wires

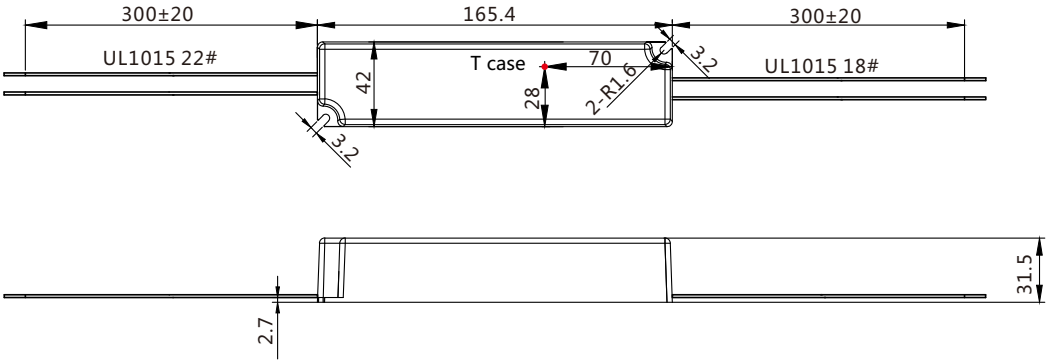

Unit: mm

Electrical Curve

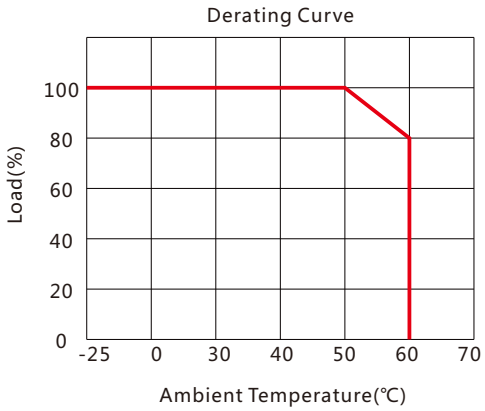

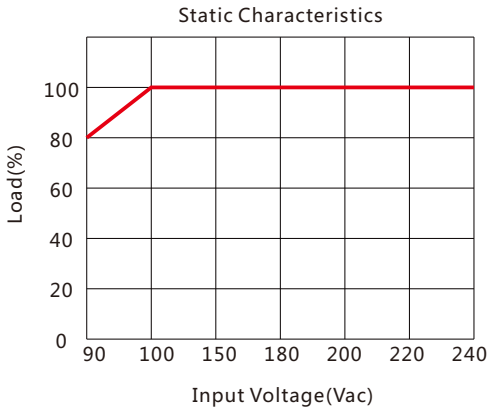

Update Record

Date	Version	Updated Content	Updated By	Approved By
2018/10/26	2018-V1.0-1026	File created		
2019/03/07	2019-V1.0-0307	File updated		