LET9045

RF power transistor, LdmoST plastic family N-channel enhancement-mode lateral MOSFETs

Preliminary data

Features

- Excellent thermal stability
- Common source configuration
- P_{OUT} = 45 W with 18.5 dB gain @ 960 MHz / 28 V
- Plastic package
- ESD protection
- In compliance with the 2002/95/EC european directive

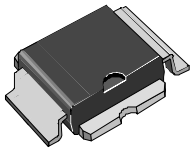

PowerSO-10RF (formed lead)

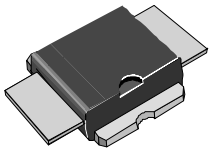

PowerSO-10RF (straight lead)

Description

The LET9045 is a common source N-Channel, enhancement-mode lateral Field-Effect RF power transistor. It is designed for high gain, broadband commercial and industrial applicatios. It operates at 28 V in common source mode at frequencies of up to 1 GHz. LET9045 boasts the excellent gain, linearity and reliability of ST's latest LDMOS technology mounted in the first true SMD plastic RF power package, PowerSO-10RF. LET9045's superior linearity performance makes it an ideal solution for base station applications.

The PowerSO-10 plastic package, designed to offer high reliability, is the first ST JEDEC approved, high power SMD package. It has been specially optimized for RF needs and offers excellent RF performances and ease of assembly. Mounting recommendations are available in www.st.com/rf/ (look for application note AN1294).

Figure 1. Pin connection

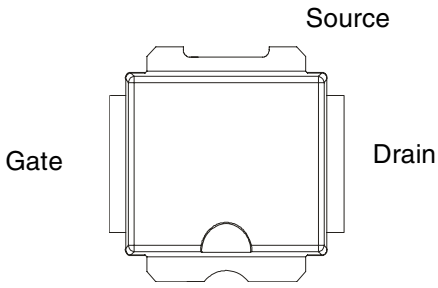

Table 1. Device summary

Order codes	Packages	Packaging
LET9045	PowerSO-10RF (formed lead)	Tube
LET9045S	PowerSO-10RF (straight lead)	Tube
LET9045TR	PowerSO-10RF (formed lead)	Tape and reel
LET9045STR	PowerSO-10RF (straight lead)	Tape and reel

This is preliminary information on a new product now in development or undergoing evaluation. Details are subject to change without notice

www.st.com

Contents

1 **Electrical data** 3
1.1 Maximum ratings 3
1.2 Thermal data 3

2 **Electrical characteristics** 4
2.1 Static 4
2.2 Dynamic 4
2.3 ESD protection characteristics 4
2.4 Moisture sensitivity level 4

3 **Package mechanical data** 5

4 **Revision history** 10

1 Electrical data

1.1 Maximum ratings

T_{CASE} = 25 °C

Table 2. Absolute maximum ratings

Symbol	Parameter	Value	Unit
$V_{(BR)DSS}$	Drain-source voltage	80	V
V_{GS}	Gate-source voltage	-0.5 to +15	V
I_D	Drain current	9	A
P_{DISS}	Power dissipation (@ T_C = 70 °C)	79	W
T_J	Max. operating junction temperature	165	°C
T_{STG}	Storage temperature	-65 to +150	°C

1.2 Thermal data

Table 3. Thermal data

Symbol	Parameter	Value	Unit
R_{thJC}	Junction - case thermal resistance	1.2	°C/W

2 Electrical characteristics

T_{CASE} = + 25 °C

2.1 Static

Table 4. Static

Symbol	Test conditions			Min.	Typ.	Max.	Unit
$V_{(BR)DSS}$	V_{GS} = 0V	I_D = 1 mA		80			V
I_{DSS}	V_{GS} = 0V	V_{DS} = 28 V				1	µA
I_{GSS}	V_{GS} = 5 V	V_{DS} = 0 V				1	µA
$V_{GS(Q)}$	V_{DS} = 28 V	I_D = 300 mA		2.0		5.0	V
$V_{DS(ON)}$	V_{GS} = 10 V	I_D = 3 A				1.2	V
G_{FS}	V_{DS} = 10 V	I_D = 3 A		2.5			mho
C_{ISS}	V_{GS} = 0V	V_{DS} = 28 V	f = 1 MHz		59		pF
C_{OSS}	V_{GS} = 0V	V_{DS} = 28 V	f = 1 MHz		28		pF
C_{RSS}	V_{GS} = 0V	V_{DS} = 28 V	f = 1 MHz		0.8		pF

2.2 Dynamic

Table 5. Dynamic

Symbol	Test conditions	Min.	Typ.	Max.	Unit
P_{OUT}	V_{DD} = 28 V, I_{DQ} = 300 mA, P_{IN} = 1 W, f = 960 MHz	45	59	-	W
G_{PS}	V_{DD} = 28 V, I_{DQ} = 300 mA, P_{IN} = 1 W, f = 960 MHz	16.5	17.5		dB
h_D	V_{DD} = 28 V, I_{DQ} = 300 mA, P_{IN} = 1 W, f = 960 MHz	60	65		%
Load mismatch	V_{DD} = 28 V, I_{DQ} = 300 mA, P_{IN} = 1 W, f = 960 MHz All phase angles	10:1			VSWR

2.3 ESD protection characteristics

Table 6. ESD protection characteristics

Test conditions	Class
Human body model	2
Machine model	M3

2.4 Moisture sensitivity level

Table 7. Moisture sensitivity level

Test conditions	Rating
J-STD-020B	MSL 3

3 Package mechanical data

In order to meet environmental requirements, ST offers these devices in different grades of ECOPACK® packages, depending on their level of environmental compliance. ECOPACK® specifications, grade definitions and product status are available at: www.st.com. ECOPACK is an ST trademark.

Table 8. PowerSO-10RF formed lead (gull wing) mechanical data

Dim.	mm.			Inch.		
	Min.	Typ.	Max.	Min.	Typ.	Max.
A1	0	0.05	0.1	0.	0.0019	0.0038
A2	3.4	3.5	3.6	0.134	0.137	0.142
A3	1.2	1.3	1.4	0.046	0.05	0.054
A4	0.15	0.2	0.25	0.005	0.007	0.009
a		0.2			0.007	
b	5.4	5.53	5.65	0.212	0.217	0.221
c	0.23	0.27	0.32	0.008	0.01	0.012
D	9.4	9.5	9.6	0.370	0.374	0.377
D1	7.4	7.5	7.6	0.290	0.295	0.298
E	13.85	14.1	14.35	0.544	0.555	0.565
E1	9.3	9.4	9.5	0.365	0.37	0.375
E2	7.3	7.4	7.5	0.286	0.292	0.294
E3	5.9	6.1	6.3	0.231	0.24	0.247
F		0.5			0.019	
G		1.2			0.047	
L	0.8	1	1.1	0.030	0.039	0.042
R1			0.25			0.01
R2		0.8			0.031	
T	2 deg	5 deg	8 deg	2 deg	5 deg	8 deg
T1		6 deg			6 deg	
T2		10 deg			10 deg	

Note: Resin protrusions not included (max value: 0.15 mm per side)

Figure 2. Package dimensions

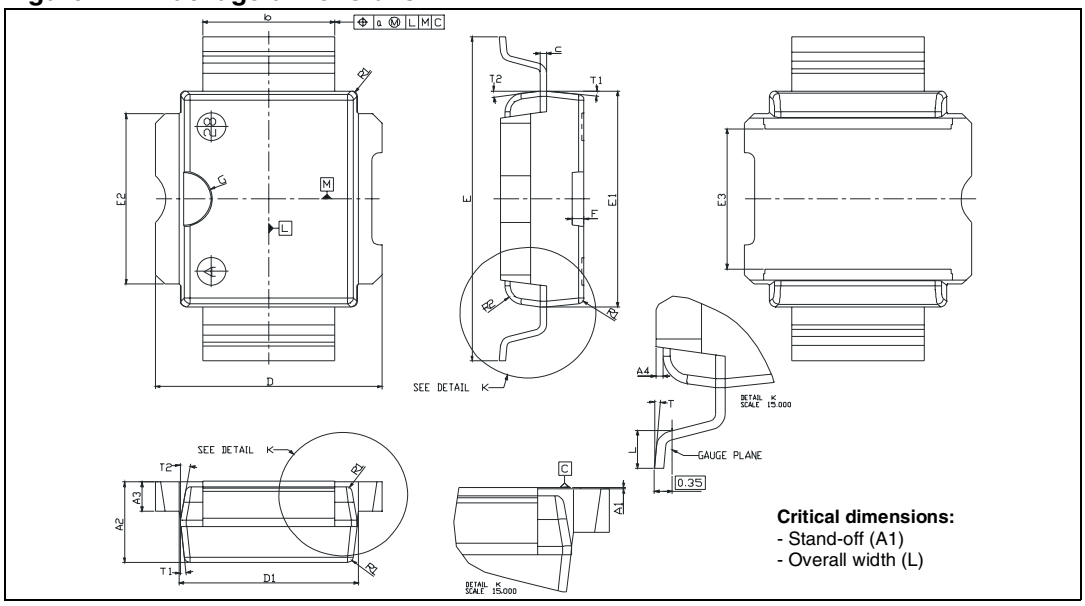

Table 9. PowerSO-10RF straight lead mechanical data

Dim.	mm.			Inch.		
	Min.	Typ.	Max.	Min.	Typ.	Max.
A1	1.62	1.67	1.72	0.064	0.065	0.068
A2	3.4	3.5	3.6	0.134	0.137	0.142
A3	1.2	1.3	1.4	0.046	0.05	0.054
A4	0.15	0.2	0.25	0.005	0.007	0.009
a		0.2			0.007	
b	5.4	5.53	5.65	0.212	0.217	0.221
c	0.23	0.27	0.32	0.008	0.01	0.012
D	9.4	9.5	9.6	0.370	0.374	0.377
D1	7.4	7.5	7.6	0.290	0.295	0.298
E	15.15	15.4	15.65	0.595	0.606	0.615
E1	9.3	9.4	9.5	0.365	0.37	0.375
E2	7.3	7.4	7.5	0.286	0.292	0.294
E3	5.9	6.1	6.3	0.231	0.24	0.247
F		0.5			0.019	
G		1.2			0.047	
R1			0.25			0.01
R2		0.8			0.031	
T1		6 deg			6 deg	
T2		10 deg			10 deg	

Note: Resin protrusions not included (max value: 0.15 mm per side)

Figure 3. Package dimensions

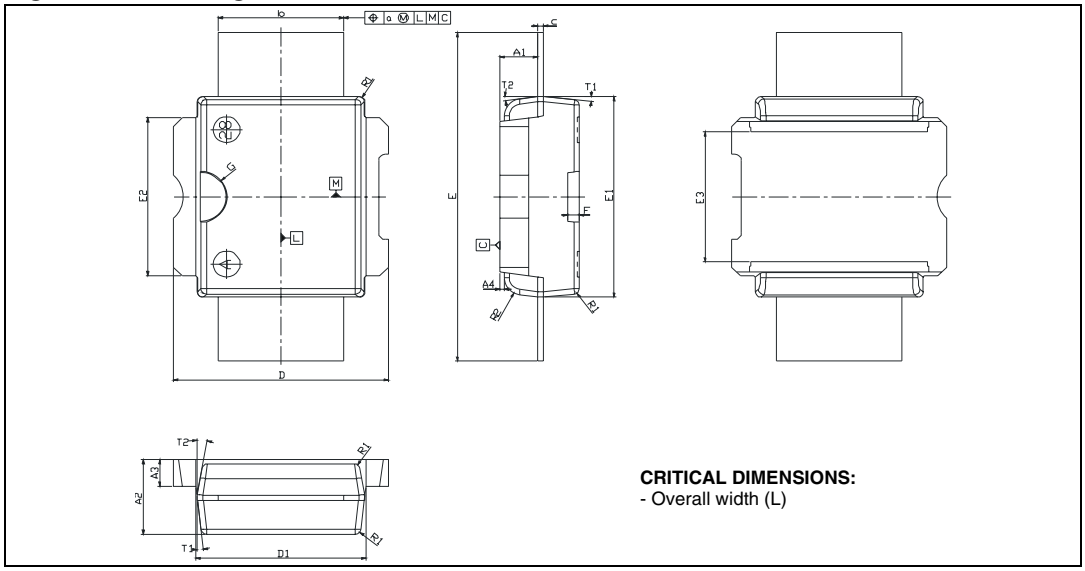

Figure 4. Tube information

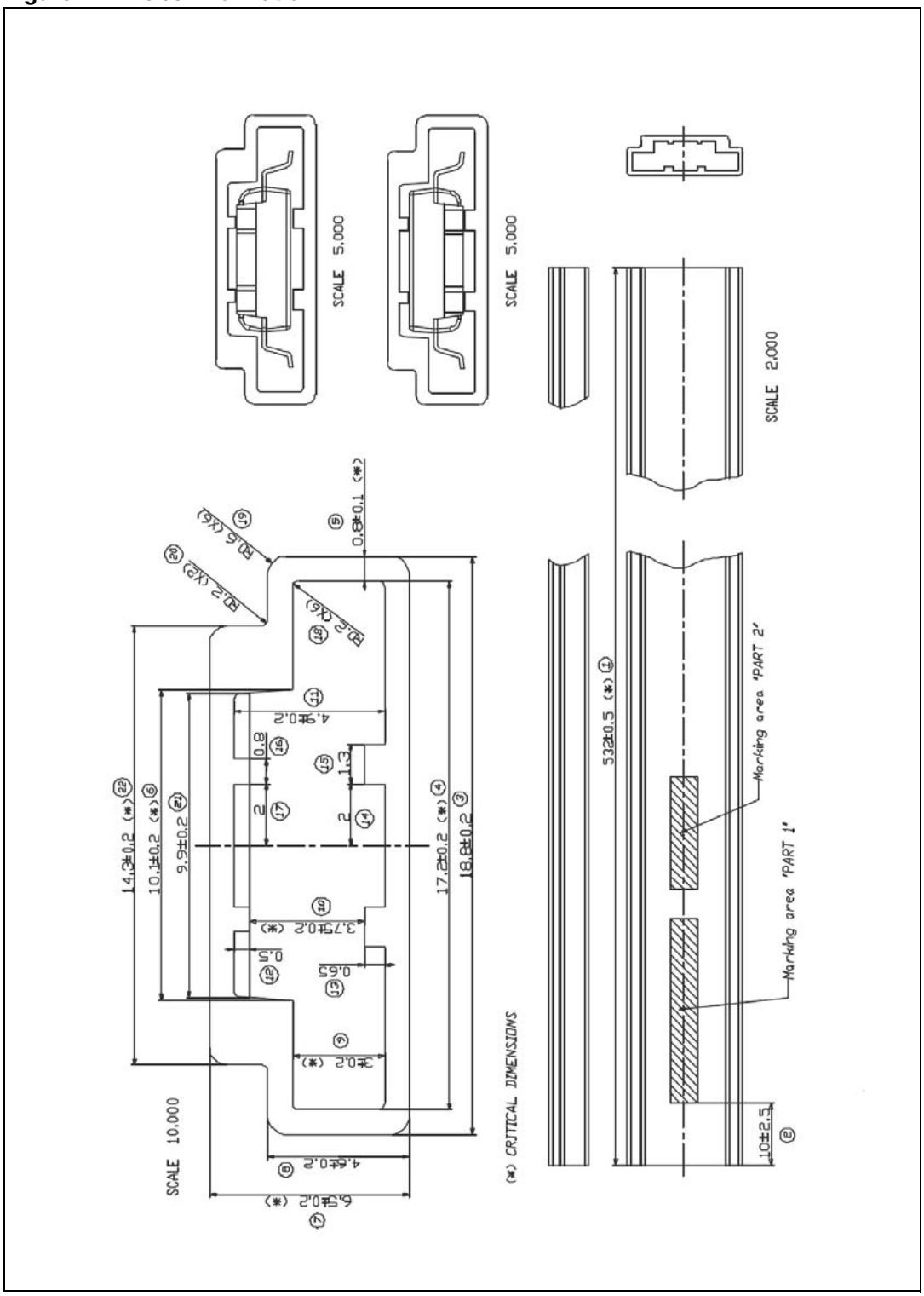

Figure 5. Reel information

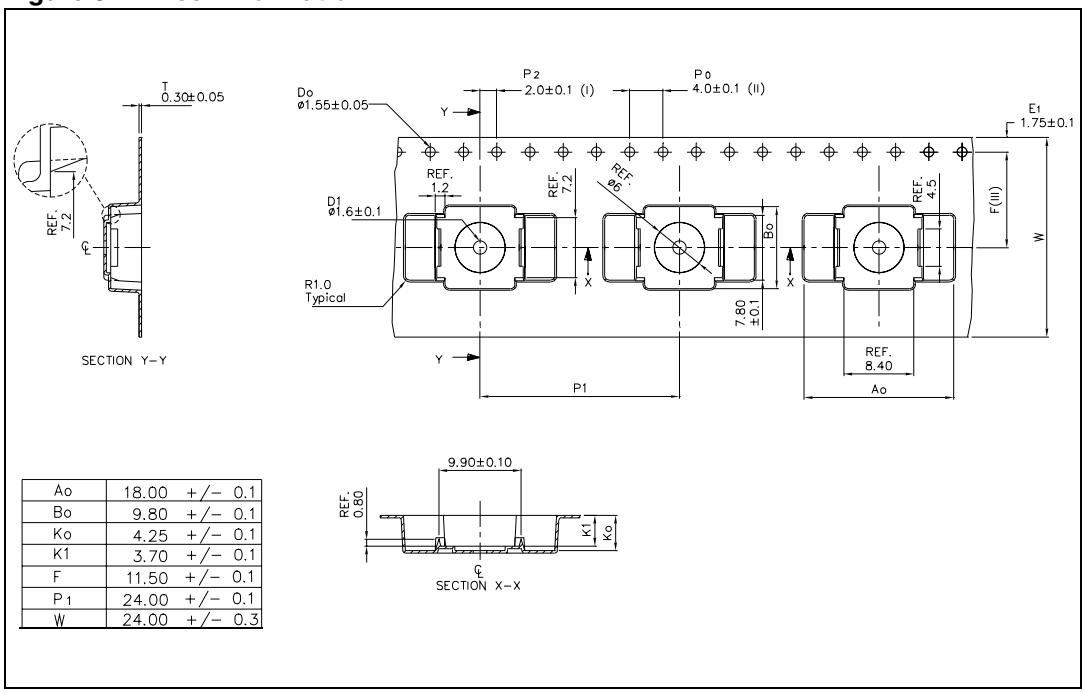

Ao	18.00	+/−	0.1
Bo	9.80	+/−	0.1
Ko	4.25	+/−	0.1
K1	3.70	+/−	0.1
F	11.50	+/−	0.1
P1	24.00	+/−	0.1
W	24.00	+/−	0.3

4 Revision history

Table 10. Document revision history

Date	Revision	Changes
10-Apr-2009	1	Initial release

Please Read Carefully:

Information in this document is provided solely in connection with ST products. STMicroelectronics NV and its subsidiaries (“ST”) reserve the right to make changes, corrections, modifications or improvements, to this document, and the products and services described herein at any time, without notice.

All ST products are sold pursuant to ST’s terms and conditions of sale.

Purchasers are solely responsible for the choice, selection and use of the ST products and services described herein, and ST assumes no liability whatsoever relating to the choice, selection or use of the ST products and services described herein.

No license, express or implied, by estoppel or otherwise, to any intellectual property rights is granted under this document. If any part of this document refers to any third party products or services it shall not be deemed a license grant by ST for the use of such third party products or services, or any intellectual property contained therein or considered as a warranty covering the use in any manner whatsoever of such third party products or services or any intellectual property contained therein.

UNLESS OTHERWISE SET FORTH IN ST’S TERMS AND CONDITIONS OF SALE ST DISCLAIMS ANY EXPRESS OR IMPLIED WARRANTY WITH RESPECT TO THE USE AND/OR SALE OF ST PRODUCTS INCLUDING WITHOUT LIMITATION IMPLIED WARRANTIES OF MERCHANTABILITY, FITNESS FOR A PARTICULAR PURPOSE (AND THEIR EQUIVALENTS UNDER THE LAWS OF ANY JURISDICTION), OR INFRINGEMENT OF ANY PATENT, COPYRIGHT OR OTHER INTELLECTUAL PROPERTY RIGHT.

UNLESS EXPRESSLY APPROVED IN WRITING BY AN AUTHORIZED ST REPRESENTATIVE, ST PRODUCTS ARE NOT RECOMMENDED, AUTHORIZED OR WARRANTED FOR USE IN MILITARY, AIR CRAFT, SPACE, LIFE SAVING, OR LIFE SUSTAINING APPLICATIONS, NOR IN PRODUCTS OR SYSTEMS WHERE FAILURE OR MALFUNCTION MAY RESULT IN PERSONAL INJURY, DEATH, OR SEVERE PROPERTY OR ENVIRONMENTAL DAMAGE. ST PRODUCTS WHICH ARE NOT SPECIFIED AS "AUTOMOTIVE GRADE" MAY ONLY BE USED IN AUTOMOTIVE APPLICATIONS AT USER’S OWN RISK.

Resale of ST products with provisions different from the statements and/or technical features set forth in this document shall immediately void any warranty granted by ST for the ST product or service described herein and shall not create or extend in any manner whatsoever, any liability of ST.

ST and the ST logo are trademarks or registered trademarks of ST in various countries.

Information in this document supersedes and replaces all information previously supplied.

The ST logo is a registered trademark of STMicroelectronics. All other names are the property of their respective owners.

© 2009 STMicroelectronics - All rights reserved

STMicroelectronics group of companies

Australia - Belgium - Brazil - Canada - China - Czech Republic - Finland - France - Germany - Hong Kong - India - Israel - Italy - Japan - Malaysia - Malta - Morocco - Singapore - Spain - Sweden - Switzerland - United Kingdom - United States of America

www.st.com