ROITHNER LASERTECHNIK
Wiedner Hauptstraße 76, A-1040 Vienna, Austria
Tel.: ++43 1 586 52 43-0, Fax -44, office@roithner-laser.com

LED435-30M32

stem type LED with ball lens

LED435-30M32 is an InGaN LED mounted on TO-18 stem with ball glass lens, being designed for sensing applications.
On forward bias it emits a spectral band of radiation, which peaks at 435 nm.

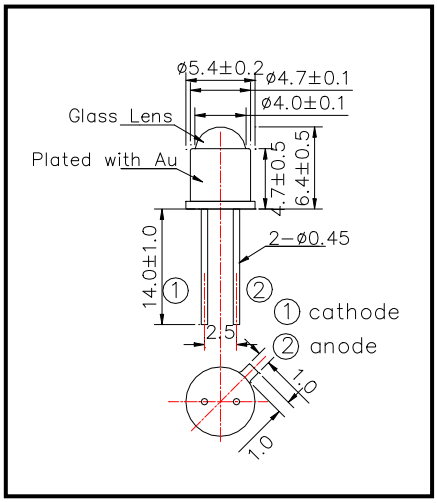

Features
High Power
High Reliability

Specifications

Product Name	LED Lamp
Type No.	LED435-30M32
Chip Spec.	
Material	InGaN
Peak Wavelength	435 nm
Package	
Type	TO-18 stem
Lens	Ball Glass Lens

Absolute Maximum Ratings

Item	Symbol	Maximum Rated Value	Unit	Ambient Temperature
Power Dissipation	P_D	120	mW	Ta = 25°C
Forward Current	I_F	30	mA	Ta = 25°C
Pulse Forward Current	I_{FP}	100	mA	Ta = 25°C
Reverse Voltage	V_R	5	V	Ta = 25°C
Operating Temperature	T_{OPR}	-30 ~ +85	°C	
Storage Temperature	T_{STG}	-30 ~ +100	°C	
Soldering Temperature	T_{SOL}	260	°C	

‡Pulse Forward Current condition: Duty = 1% and Pulse Width = 10µs
‡Soldering condition: Soldering condition must be completed within 3 seconds at 260°C

Electro-Optical Characteristics

Item	Symbol	Condition	Minimum	Typical	Maximum	Unit
Forward Voltage	V_F	I_F = 20 mA	3.2	3.3	3.4	V
Reverse Current	I_R	V_R = 5 V			10	µA
Total Radiated Power	P_O	I_F = 20 mA	2.1	2.2	2.3	mW
Brightness	I_V	I_F = 20 mA	-	-	-	mcd
Radiant Intensity	I_E	I_F = 20 mA	-	-	-	mW/sr
Peak Wavelength	λ_P	I_F = 20 mA	430	435	440	nm
Spectrum Half Width	$\Delta\lambda$	I_F = 20 mA		15		nm
Viewing Half Angle	$2\theta_{1/2}$	I_F = 20 mA		±10		deg.

‡Total Radiated Power is measured by Photodyne #500
‡Radiant Intensity is measured by Tektronix J-6512