HIGH EFFICIENCY LED CONTROLLER

Main Features: output current adjustable, supply current monitoring, high efficiency, high power density, high precision, small size, fault protection, low output ripple current and low cost.

Specifications

Part number:	LED22V1A
Input voltage:	7V to 22V
Output voltage:	1V to power supply voltage – 0.5V
Maximum output current:	1A
Efficiency:	90% typical
Dimming control voltage:	0 to 1.25V
Packaging:	FR-4 PCB
Operating temperature:	–10°C to 85°C
Dimension:	**25mm ´ 14mm ´ 5.5mm**

Output Pin Description

Pin 1, GND, the signal and power ground. Connect the negative power supply terminal to this pin.

Pin 2, VPSPR, the power supply positive input. Connect the positive power supply terminal to this pin. When using this pin, the power supply current will be monitored (See Pin 7) and the controller will be turned off when the current exceeds 2.27A. The current sense resistor is of 0.022Ω.

Pin 3, VPSDR, the power supply positive input. Connect the positive power supply terminal to this pin. When using this pin, the power supply current will not be monitored and the controller will not be turned off when the power supply current exceeds 2.27A. The efficiency will be higher by using this pin since the power supply current does not go through the 0.022Ω resistor, as opposed to using Pin 2.

Pin 4, LIS, analog input control voltage. Setting this voltage by using a POT (Potentiometer) or a DAC from 0 to 1.25V will set the output current from 0 to 1A. The input impedance of this pin is 100KΩ. Leaving this pin float will allow the POT on the PCB to set the output current which sets the output current from 0 to 1A, turning clock-wise to increase the current.

Pin 5, 2.5V, analog output, reference voltage, 20ppm/°C, ± 1mA.

Pin 6, SDNG, digital input, shut down negative logic, 0 to 0.8V = shut down; 2V to 5V = turn on. Leaving this pin open will enable the controller.

Pin 7, PSIO, analog output, power supply current indication. It will be effective when connecting the positive power supply terminal through VPSPR (Pin 2).
Power supply current = [voltage at PSIO]*0.91. For example, when the output voltage is 2V, the power supply current = 2*0.91 = 1.82A.

Pin 8, LEDA, analog output for LED anode. Connect this pin to the LED positive terminal, the anode.

Pin 9, GND, power ground, connect this pin to the LED negative terminal, the cathode.

550 E. Weddell Drive, Suite 4, Sunnyvale, CA 94089. U. S. A. Tel.: (408) 747-9760, Fax: (408) 747-9770. www.analogtechnologies.com

© Copyright 1999 – 2003, Analog Technologies, Inc. All Rights Reserved. Updated: 4/28/03

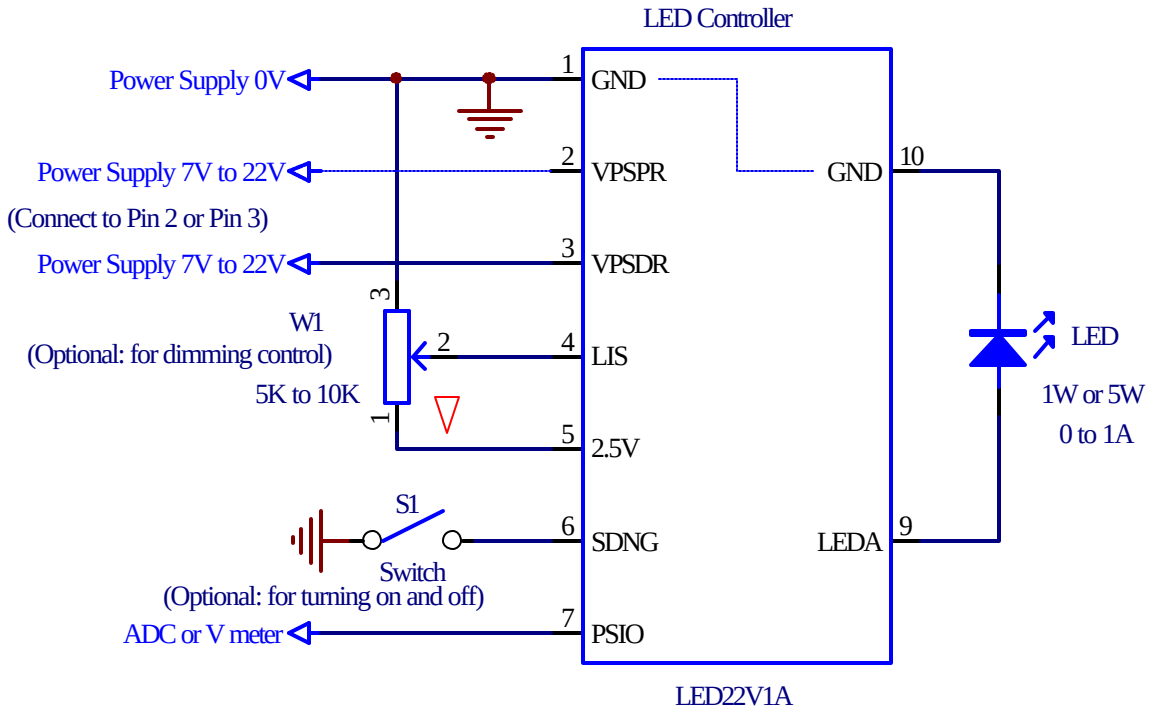

Figure 1 Typical Application of LED Controller LED22V1A

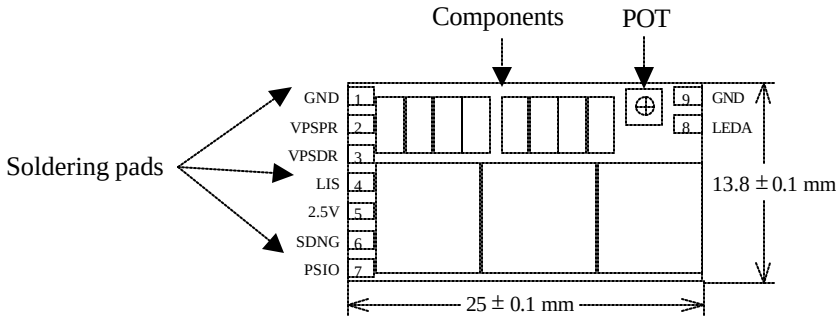

Figure 2 Top View

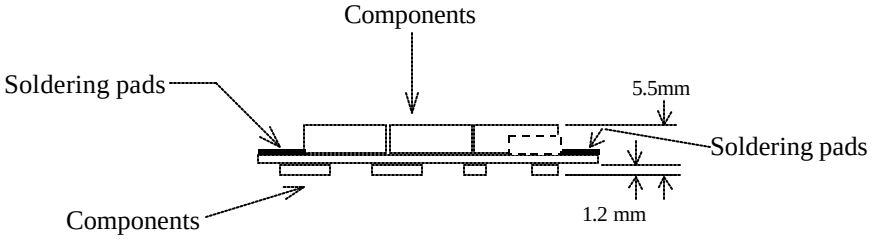

Figure 3 Side View

© Copyright 1999 – 2003, Analog Technologies, Inc. All Rights Reserved. Updated: 4/28/03

Part Numbers for Ordering

Part Number	Input Voltage	Output Current	Application
LED22V1A-350MA	7V ~ 22V	350mA	For driving one to five 1W Luxeon LED
LED22V1A-700MA	7V ~ 22V	700mA	For driving one to two 5W Luxeon LED
LED22V1A-ADJ	7V ~ 22V	Adjustable	For driving one to five 1W Luxeon LED or one to two 5W Luxeon LED

Prices and Lead-Times for Ordering

Part Number	1 – 9 PCs	10 – 49 PCs	50 – 249 PCs	250 – 999 PCs	1000 PCs and up
LED22V1A-350MA	$19	$16	$14	$11	$9.5
LED22V1A-700MA	$19	$16	$14	$11	$9.5
LED22V1A-ADJ	$28	$24	$18	$14	$12
Lead Time	1 week	2 weeks	2 weeks	3 weeks	Contact us

Payment Term: Credit cards or P.O.s with 50% down payment 50% net 30.

Note: ATI retains the ownership of full rights for its LED controller technologies, associated the designs for mechanics and electronics, plus all modifications, improvements, and inventions made by ATI.

550 E. Weddell Drive, Suite 4, Sunnyvale, CA 94089. U. S. A. Tel.: (408) 747-9760, Fax: (408) 747-9770. www.analogtechnologies.com

© Copyright 1999 – 2003, Analog Technologies, Inc. All Rights Reserved. Updated: 4/28/03