LE25W81QE

Serial Flash Memory
8 Mb (1024K x 8)

ON Semiconductor®

www.onsemi.com

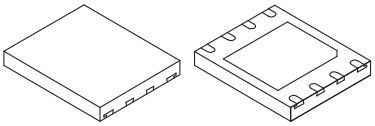

VDFN8 5x6, 1.27P / VSON8T (6x5)

Overview

The LE25W81QE is a serial interface-compatible flash memory device with a 1M × 8-bit configuration. It uses a single 2.6 V power supply for both reading and writing (program and erase functions) and does not require a special power supply. As such, it can support on-board programming. It has three erase functions, each of which corresponds to the size of the memory area in which the data is to be erased at one time: the small sector (4K bytes) erase function, the sector (64K bytes) erase function, and the chip erase function (for erasing all the data together). The memory space can be efficiently utilized by selecting one of these functions depending on the application. A page program method is supported for data writing. The page program method of LE25W81QE can program any amount of data from 1 to 256 bytes. This IC incorporates ON Semiconductor's unique high-speed programming function which enables fast 0.3 ms (typ) page program time.

The program time of 1.5 s (typ) when programming 8M bit full-memory space makes for fast data writing when the chip erase function is used. While making the most of the features inherent to a serial flash memory device, the LE25W81QE is housed in an 8-pin ultra-miniature package. Serial flash memory devices tend to be at a disadvantage in terms of their read speed, but the LE25W81QE has maximally eliminated this speed-related disadvantage by supporting clocks with frequencies up to 50 MHz under SPI bus specifications. All these features make this device ideally suited to storing program codes in applications such as portable information devices and small disk systems, which are required to have increasingly more compact dimensions.

Features

- Read/write operations enabled by single 2.6 V power supply :
  2.45 to 3.6 V supply voltage range
- Operating frequency : 30 MHz
- Temperature range : –20 to +70°C (Read operation)
  0 to +70°C (Write operation)
- Serial interface : SPI mode 0, mode 3 supported
- Sector size : 4K bytes/small sector, 64K bytes/sector
- Small sector erase, sector erase, chip erase functions
- Page program function (256 bytes / page)
- Block protect function
- Highly reliable read/write
  - Number of rewrite times : 100,000 times
  - Small sector erase time : 80 ms (typ), 300 ms (max)
  - Sector erase time : 100 ms (typ), 400 ms (max)
  - Chip erase time : 250 ms (typ), 3.0 s (max)
  - Page program time : 0.3 ms / 256 bytes (typ), 1 ms / 256 bytes (max)
- Status functions : Ready/busy information, protect information
- Data retention period : 20 years
- Package : VDFN8 5×6

* This product is licensed from Silicon Storage Technology, Inc. (USA).

ORDERING INFORMATION

See detailed ordering and shipping information on page 21 of this data sheet.

© Semiconductor Components Industries, LLC, 2017

February 2017 - Rev. 0

Publication Order Number :
LE25W81QE/D

Package Dimensions

unit : mm

VDFN8 5x6, 1.27P / VSON8T (6x5)
CASE 509AG
ISSUE O

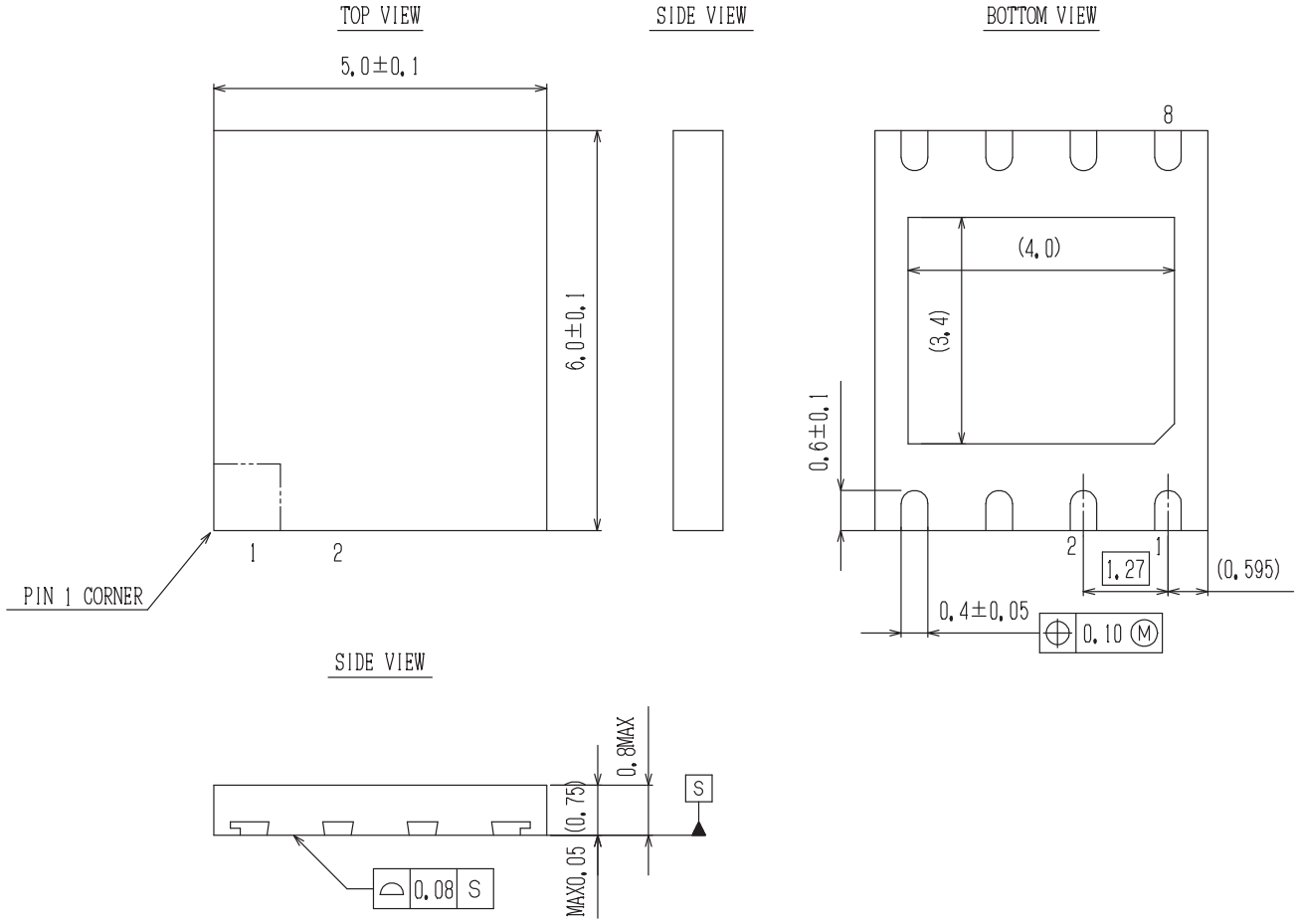

Figure 1 Pin Assignments

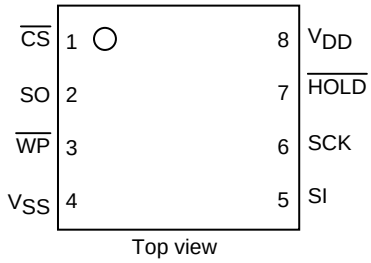

Top view

Figure 2 Block Diagram

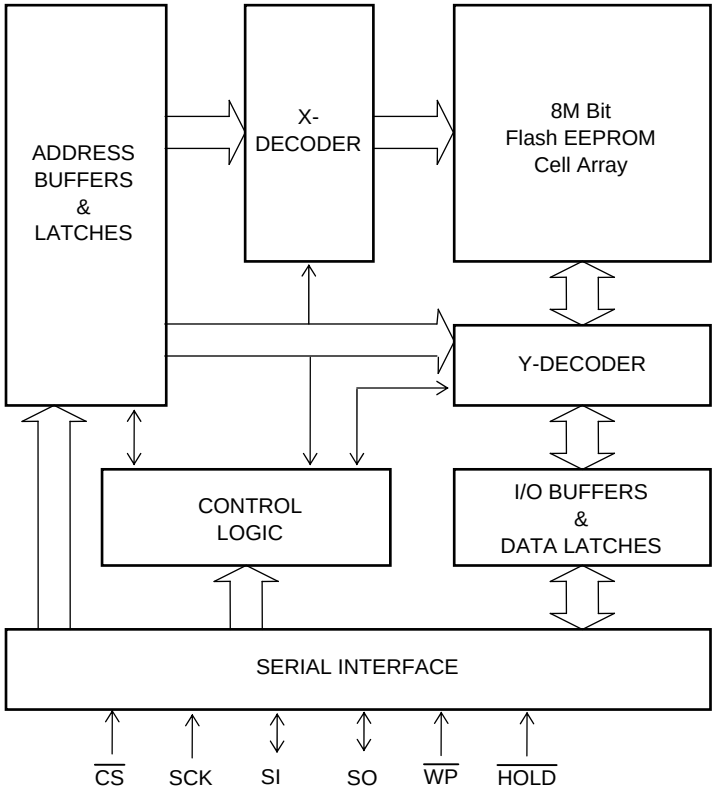

Table 1 Pin Description

Symbol	Pin Name	Description
SCK	Serial clock	This pin controls the data input/output timing. The input data and addresses are latched synchronized to the rising edge of the serial clock, and the data is output synchronized to the falling edge of the serial clock.
SI	Serial data input	The data and addresses are input from this pin, and latched internally synchronized to the rising edge of the serial clock.
SO	Serial data output	The data stored inside the device is output from this pin synchronized to the falling edge of the serial clock.
$\overline{CS}$	Chip select	The device becomes active when the logic level of this pin is low; it is deselected and placed in standby status when the logic level of the pin is high.
$\overline{WP}$	Write protect	The status register write protect (SRWP) takes effect when the logic level of this pin is low.
$\overline{HOLD}$	Hold	Serial communication is suspended when the logic level of this pin is low.
V_{DD}	Power supply	This pin supplies the 2.45 to 2.75 V supply voltage.
V_{SS}	Ground	This pin supplies the 0 V supply voltage.

Table 2 Command Settings

Command	1st bus cycle	2nd bus cycle	3rd bus cycle	4th bus cycle	5th bus cycle	6th bus cycle	Nth bus cycle
Read	03h	A23-A16	A15-A8	A7-A0			
	0Bh	A23-A16	A15-A8	A7-A0	X		
Small sector erase	D7h or 20h	A23-A16	A15-A8	A7-A0			
Sector erase	D8h	A23-A16	A15-A8	A7-A0			
Chip erase	C7h						
Page program	02h	A23-A16	A15-A8	A7-A0	PD *1	PD *1	PD *1
Write enable	06h						
Write disable	04h						
Power down	B9h						
Status register read	05h						
Status register write	01h	DATA					
Read silicon ID 1 *2	9Fh						
Read silicon ID 2 *3	ABh	X	X	A7-A0			
Exit power down mode	ABh						

Explanatory notes for Table 2

"X" signifies "don't care" (that is to say, any value may be input).

The "h" following each code indicates that the number given is in hexadecimal notation.

Addresses A23 to A20 for all commands are "Don't care".

In order for commands other than the read command to be recognized, $\overline{CS}$ must rise after all the bus cycle input.

*1: "PD" stands for page program data. Any amount of data from 1 to 256 bytes in 1-byte unit is input.

*2: Of the two silicon ID commands, it is for the command with the 9Fh setting that the manufacturer code 62h is first output. For as long as the clock input is continued, 26h of the device code is output continuously, followed by the repeated output of 62h and 26h.

*3: Of the two silicon ID commands, it is for the command with the ABh setting that manufacturer code 62h is first output when address A0 is "0", and the device code 27h is first output when address A0 is "1". Addresses A7 to A1 are "don't care". For as long as the clock input is continued, 62h and 26h are repeatedly output.

Device Operation

The LE25W81QE features electrical on-chip erase functions using a single 2.6 V power supply, that have been added to the EPROM functions of the industry standard that support serial interfaces. Interfacing and control are facilitated by incorporating the command registers inside the chip. The read, erase, program and other required functions of the device are executed through the command registers. The command addresses and data input in accordance with "Table 2 Command Settings" are latched inside the device in order to execute the required operations. "Figure 3 Serial Input Timing" shows the timing waveforms of the serial data input. First, at the falling CS edge the device is selected, and serial input is enabled for the commands, addresses, etc. These inputs are introduced internally in sequence starting with bit 7 in synchronization with the rising SCK edge. At this time, output pin SO is in the high-impedance state. The output pin is placed in the low-impedance state when the data is output in sequence starting with bit 7 synchronized to the falling clock edge during read, status register read and silicon ID. Refer to "Figure 4 Serial Output Timing" for the serial output timing.

The LE25W81QE supports both serial interface SPI mode 0 and SPI mode 3. At the falling CS edge, SPI mode 0 is automatically selected if the logic level of SCK is low, and SPI mode 3 is automatically selected if the logic level of SCK is high.

Figure 3 Serial Input Timing

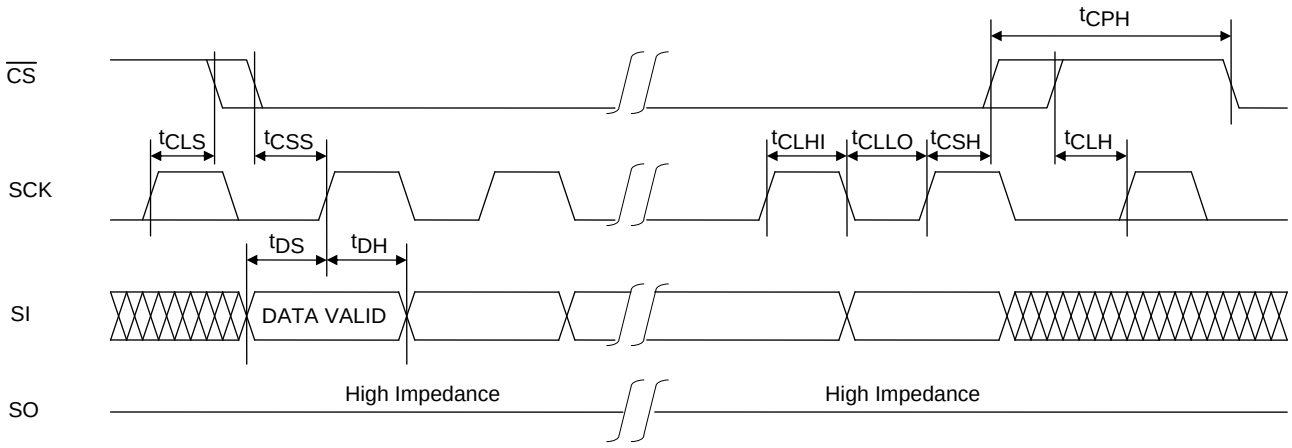

Figure 4 Serial Output Timing

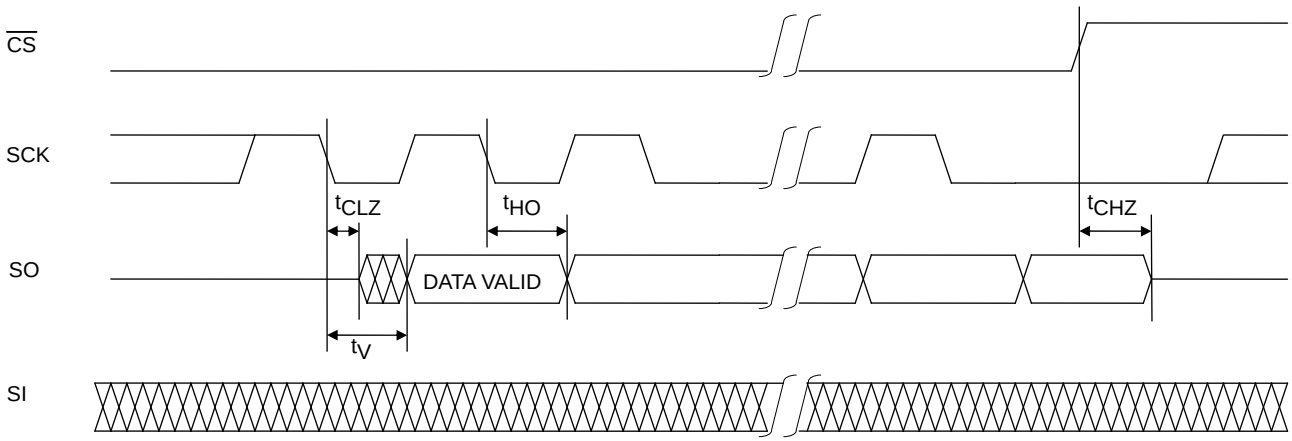

Description of Commands and Their Operations

"Table 2 Command Settings" provides a list and overview of the commands. A detailed description of the functions and operations corresponding to each command is presented below.

1. Read

There are two read commands, the 4 bus cycle read command and 5 bus cycle read command. Consisting of the first through fourth bus cycles, the 4 bus cycle read command inputs the 24-bit addresses following (03h), and the data in the designated addresses is output synchronized to SCK. The data is output from SO on the falling clock edge of fourth bus cycle bit 0 as a reference. "Figure 5-a 4 Bus Read" shows the timing waveforms.

Consisting of the first through fifth bus cycles, the 5 bus cycle read command inputs the 24-bit addresses and 8 dummy bits following (0Bh). The data is output from SO using the falling clock edge of fifth bus cycle bit 0 as a reference. "Figure 5-b 5 Bus Read" shows the timing waveforms. The only difference between these two commands is whether the dummy bits in the fifth bus cycle are input.

When SCK is input continuously after the read command has been input and the data in the designated addresses has been output, the address is automatically incremented inside the device while SCK is being input, and the corresponding data is output in sequence. If the SCK input is continued after the internal address arrives at the highest address (FFFFFh), the internal address returns to the lowest address (00000h), and data output is continued. By setting the logic level of $\overline{CS}$ to high, the device is deselected, and the read cycle ends. While the device is deselected, the output pin SO is in a high-impedance state.

Figure 5-a 4 Bus Read

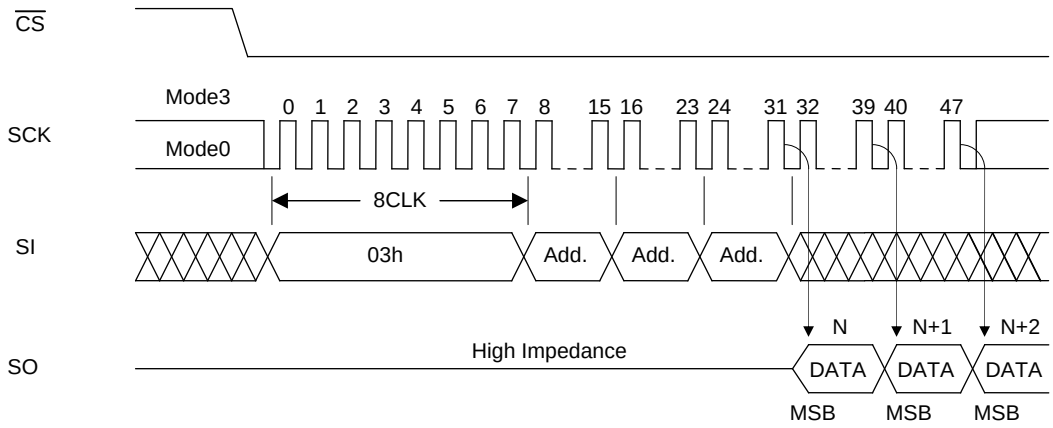

Figure 5-b 5 Bus Read

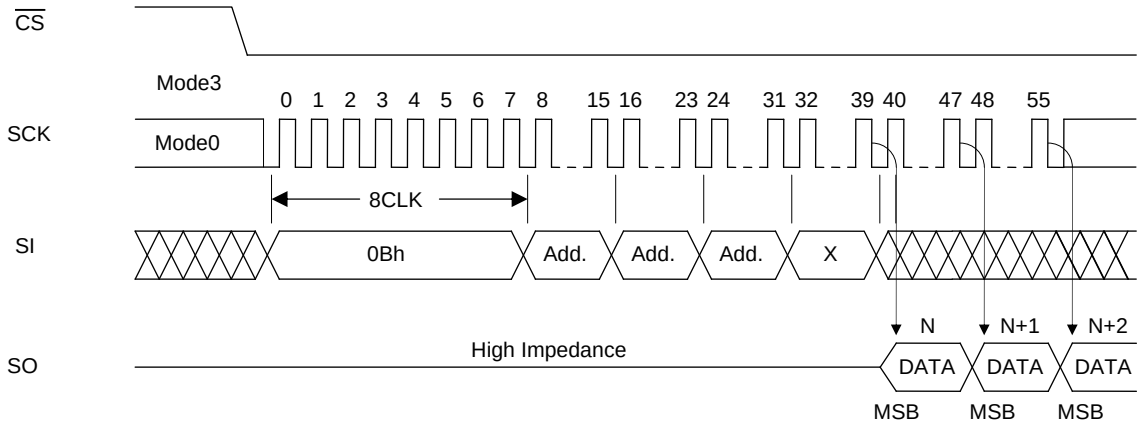

2. Status Registers

The status registers hold the operating and setting statuses inside the device, and this information can be read (status register read) and the protect information can be rewritten (status register write). There are 8 bits in total, and "Table 3 Status registers" gives the significance of each bit.

Table 3 Status Registers

Bit	Name	Logic	Function	Power-on Time Information
Bit0	$\overline{\text{RDY}}$	0	Ready	0
		1	Erase/Program	
Bit1	WEN	0	Write disabled	0
		1	Write enabled	
Bit2	BP0	0	Block protect information See status register descriptions on BP0, BP1, and BP2.	Nonvolatile information
		1		
Bit3	BP1	0		Nonvolatile information
		1		
Bit4	BP2	0		Nonvolatile information
		1		
Bit5			Reserved bits	0
Bit6				0
Bit7	SRWP	0	Status register write enabled	Nonvolatile information
		1	Status register write disabled	

2-1. Status register read

The contents of the status registers can be read using the status register read command. This command can be executed even during the following operations.

- Small sector erase, sector erase, chip erase
- Page program
- Status register write

"Figure 6 Status Register Read" shows the timing waveforms of status register read. Consisting only of the first bus cycle, the status register command outputs the contents of the status registers synchronized to the falling edge of the clock (SCK) with which the eighth bit of (05h) has been input. In terms of the output sequence, SRWP (bit 7) is the first to be output, and each time one clock is input, all the other bits up to $\overline{\text{RDY}}$ (bit 0) are output in sequence, synchronized to the falling clock edge. If the clock input is continued after $\overline{\text{RDY}}$ (bit 0) has been output, the data is output by returning to the bit (SRWP) that was first output, after which the output is repeated for as long as the clock input is continued. The data can be read by the status register read command at any time (even during a program or erase cycle).

Figure 6 Status Register Read

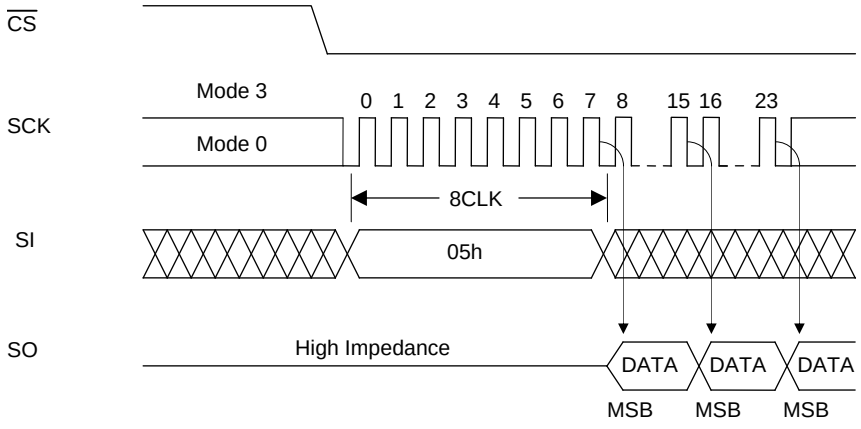

2-2. Status register write

The information in status registers BP0, BP1, BP2 and SRWP can be rewritten using the status register write command. RDY, WEN, bit 5, and bit 6 are read-only bits and cannot be rewritten. The information in bits BP0, BP1, BP2, and SRWP is stored in the non-volatile memory, and when it is written in these bits, the contents are retained even at power-down. "Figure 7 Status Register Write" shows the timing waveforms of status register write, and Figure 20 shows a status register write flowchart. Consisting of the first and second bus cycles, the status register write command initiates the internal write operation at the rising CS edge after the data has been input following (01h). Erase and program are performed automatically inside the device by status register write so that erasing or other processing is unnecessary before executing the command. By the operation of this command, the information in bits BP0, BP1, BP2, and SRWP can be rewritten. Since bits RDY (bit 0), WEN (bit 1), 4, 5, and 6 of the status register cannot be written, no problem will arise if an attempt is made to set them to any value when rewriting the status register. Status register write ends can be detected by RDY of status register read. Information in the status registers can be rewritten 1,000 times (min). To initiate status register write, the logic level of the WP pin must be set high and status register WEN must be set to "1".

Figure 7 Status Register Write

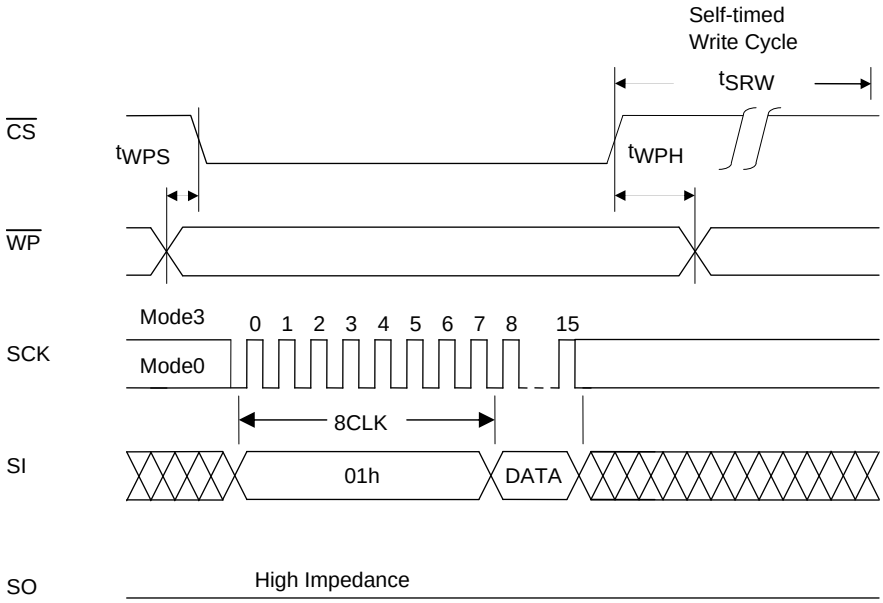

2-3. Contents of each status register

RDY (bit 0)

The RDY register is for detecting the write (program, erase and status register write) end. When it is "1", the device is in a busy state, and when it is "0", it means that write is completed.

WEN (bit 1)

The WEN register is for detecting whether the device can perform write operations. If it is set to "0", the device will not perform the write operation even if the write command is input. If it is set to "1", the device can perform write operations in any area that is not block-protected.
WEN can be controlled using the write enable and write disable commands. By inputting the write enable command (06h), WEN can be set to "1"; by inputting the write disable command (04h), it can be set to "0." In the following states, WEN is automatically set to "0" in order to protect against unintentional writing.

- At power-on
- Upon completion of small sector erase, sector erase or chip erase
- Upon completion of page program
- Upon completion of status register write

* If a write operation has not been performed inside the LE25W81QE because, for instance, the command input for any of the write operations (small sector erase, sector erase, chip erase, page program, or status register write) has failed or a write operation has been performed for a protected address, WEN will retain the status established prior to the issue of the command concerned. Furthermore, its state will not be changed by a read operation.

BP0, BP1, BP2 (bits 2, 3, 4)

Block protect BP0, BP1, and BP2 are status register bits that can be rewritten, and the memory space to be protected can be set depending on these bits. For the setting conditions, refer to "Table 4 Protect level setting conditions".

Table 4 Protect Level Setting Conditions

Protect Level	Status Register Bits			Protected Area
	BP2	BP1	BP0	
0 (Whole area unprotected)	0	0	0	None
1 (1/16 protected)	0	0	1	F0000h to FFFFFh
2 (1/8 protected)	0	1	0	E0000h to FFFFFh
3 (1/4 protected)	0	1	1	C0000h to FFFFFh
4 (1/2 protected)	1	0	0	80000h to FFFFFh
5 (Whole area protected)	1	0	1	00000h to FFFFFh
5 (Whole area protected)	1	1	0	00000h to FFFFFh
5 (Whole area protected)	1	1	1	00000h to FFFFFh

* Chip erase is enabled only when the protect level is 0.

SRWP (bit 7)

Status register write protect SRWP is the bit for protecting the status registers, and its information can be rewritten. When SRWP is "1" and the logic level of the $\overline{WP}$ pin is low, the status register write command is ignored, and status registers BP0, BP1, BP2, and SRWP are protected. When the logic level of the $\overline{WP}$ pin is high, the status registers are not protected regardless of the SRWP state. The SRWP setting conditions are shown in "Table 5 SRWP setting conditions".

Table 5 SRWP Setting Conditions

$\overline{WP}$ Pin	SRWP	Status Register Protect State
0	0	Unprotected
	1	Protected
1	0	Unprotected
	1	Unprotected

Bits 5 and 6 are reserved bits, and have no significance.

3. Write Enable

Before performing any of the operations listed below, the device must be placed in the write enable state. Operation is the same as for setting status register WEN to "1", and the state is enabled by inputting the write enable command. "Figure 8 Write Enable" shows the timing waveforms when the write enable operation is performed. The write enable command consists only of the first bus cycle, and it is initiated by inputting (06h).

- Small sector erase, sector erase, chip erase
- Page program
- Status register write

4. Write Disable

The write disable command sets status register WEN to "0" to prohibit unintentional writing. "Figure 9 Write Disable" shows the timing waveforms. The write disable command consists only of the first bus cycle, and it is initiated by inputting (04h). The write disable state (WEN "0") is exited by setting WEN to "1" using the write enable command (06h).

Figure 8 Write Enable

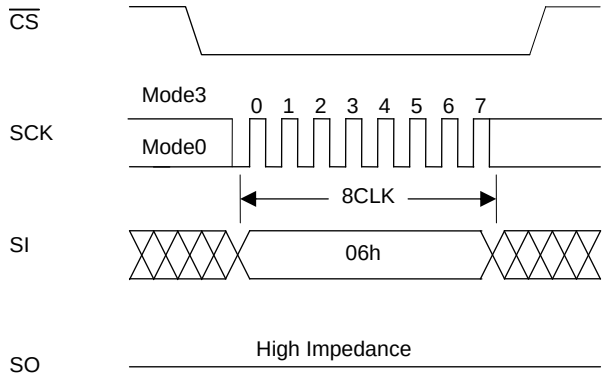

Figure 9 Write Disable

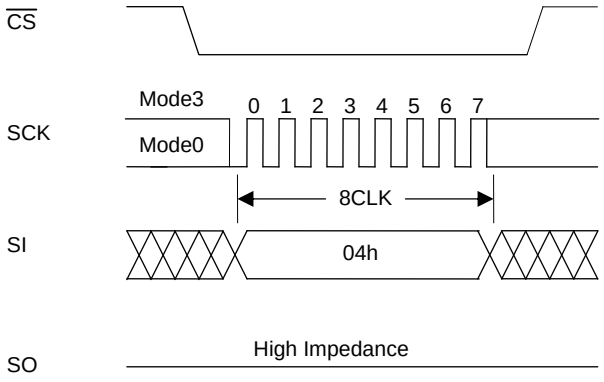

5. Power-down

The power-down command sets all the commands, with the exception of the silicon ID read command and the command to exit from power-down, to the acceptance prohibited state (power-down). "Figure 10 Power-down" shows the timing waveforms. The power-down command consists only of the first bus cycle, and it is initiated by inputting (B9h). However, a power-down command issued during an internal write operation will be ignored. The power-down state is exited using the power-down exit command (power-down is exited also when one bus cycle or more of the silicon ID read command (ABh) has been input). "Figure 11 Exiting from Power-down" shows the timing waveforms of the power-down exit command.

Figure 10 Power-down

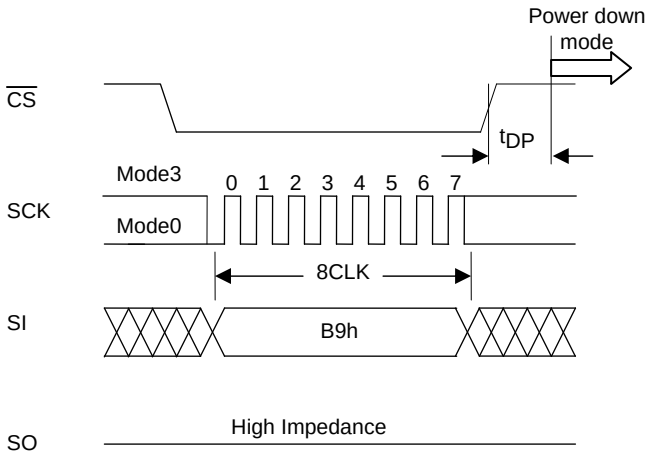

Figure 11 Exiting from Power-down

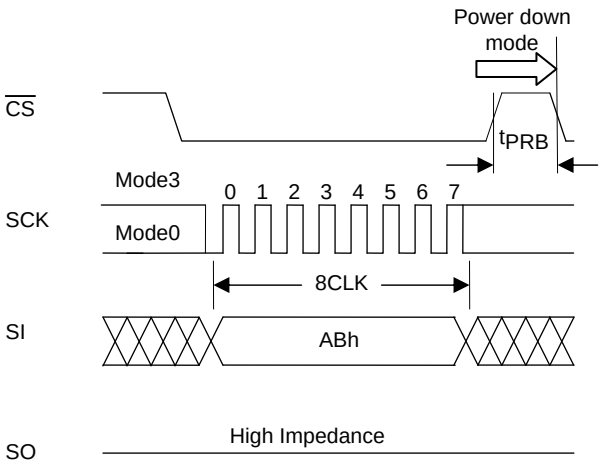

6. Small Sector Erase

Small sector erase is an operation that sets the memory cell data in any small sector to "1". A small sector consists of 4Kbytes. "Figure 12 Small Sector Erase" shows the timing waveforms, and Figure 21 shows a small sector erase flowchart. The small sector erase command consists of the first through fourth bus cycles, and it is initiated by inputting the 24-bit addresses following (D7h or 20h). Addresses A19 to A12 are valid, and Addresses A23 to A20 are "don't care". After the command has been input, the internal erase operation starts from the rising $\overline{CS}$ edge, and it ends automatically by the control exercised by the internal timer. Erase end can also be detected using status register $\overline{RDY}$.

Figure 12 Small Sector Erase

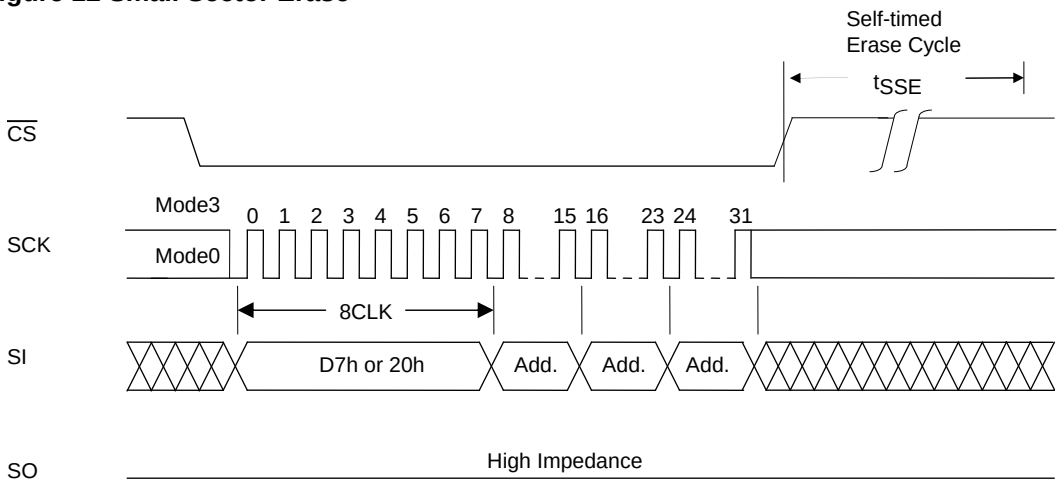

7. Sector Erase

Sector erase is an operation that sets the memory cell data in any sector to "1". A sector consists of 64K bytes. "Figure 13 Sector Erase" shows the timing waveforms, and Figure 21 shows a sector erase flowchart. The sector erase command consists of the first through fourth bus cycles, and it is initiated by inputting the 24-bit addresses following (D8h). Addresses A19 to A16 are valid, and Addresses A23 to A20 are "don't care". After the command has been input, the internal erase operation starts from the rising $\overline{CS}$ edge, and it ends automatically by the control exercised by the internal timer. Erase end can also be detected using status register $\overline{RDY}$.

Figure 13 Sector Erase

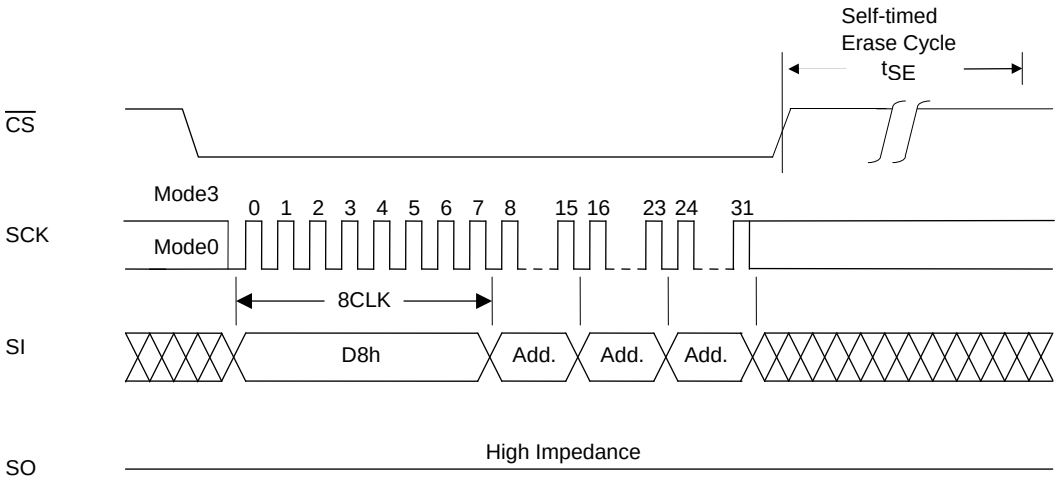

8. Chip Erase

Chip erase is an operation that sets the memory cell data in all the sectors to "1". "Figure 14 Chip Erase" shows the timing waveforms, and Figure 21 shows a chip erase flowchart. The chip erase command consists only of the first bus cycle, and it is initiated by inputting (C7h). After the command has been input, the internal erase operation starts from the rising $\overline{CS}$ edge, and it ends automatically by the control exercised by the internal timer. Erase end can also be detected using status register $\overline{RDY}$.

Figure 14 Chip Erase

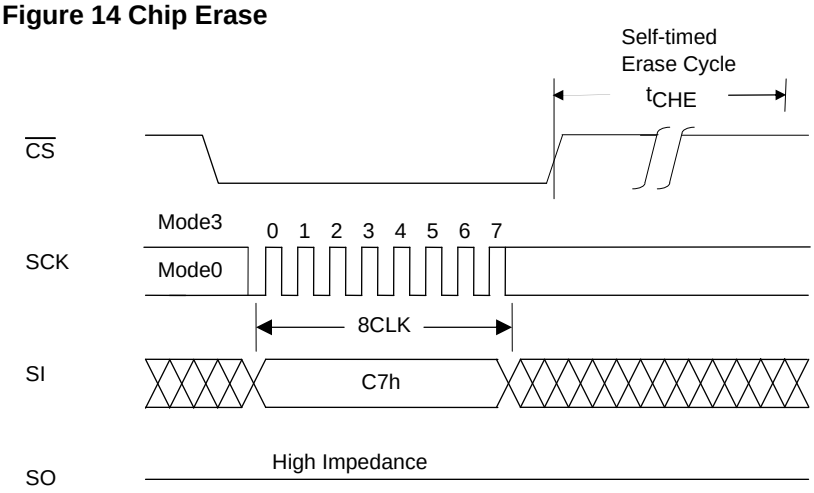

9. Page Program

Page program is an operation that programs any number of bytes from 1 to 256 bytes within the same sector page (page addresses: A19 to A8). Before initiating page program, the data on the page concerned must be erased using small sector erase, sector erase, or chip erase. "Figure 15 Page Program" shows the page program timing waveforms, and Figure 22 shows a page program flowchart. After the falling $\overline{CS}$, edge, the command (02H) is input followed by the 24-bit addresses. Addresses A19 to A0 are valid. The program data is then loaded at each rising clock edge until the rising $\overline{CS}$ edge, and data loading is continued until the rising $\overline{CS}$ edge. If the data loaded has exceeded 256 bytes, the 256 bytes loaded last are programmed. The program data must be loaded in 1-byte increments, and the program operation is not performed at the rising $\overline{CS}$ edge occurring at any other timing. The page programming time of 0.3 ms (typ) when programming 256 bytes (1 page) at one time makes for fast data writing.

Figure 15 Page Program

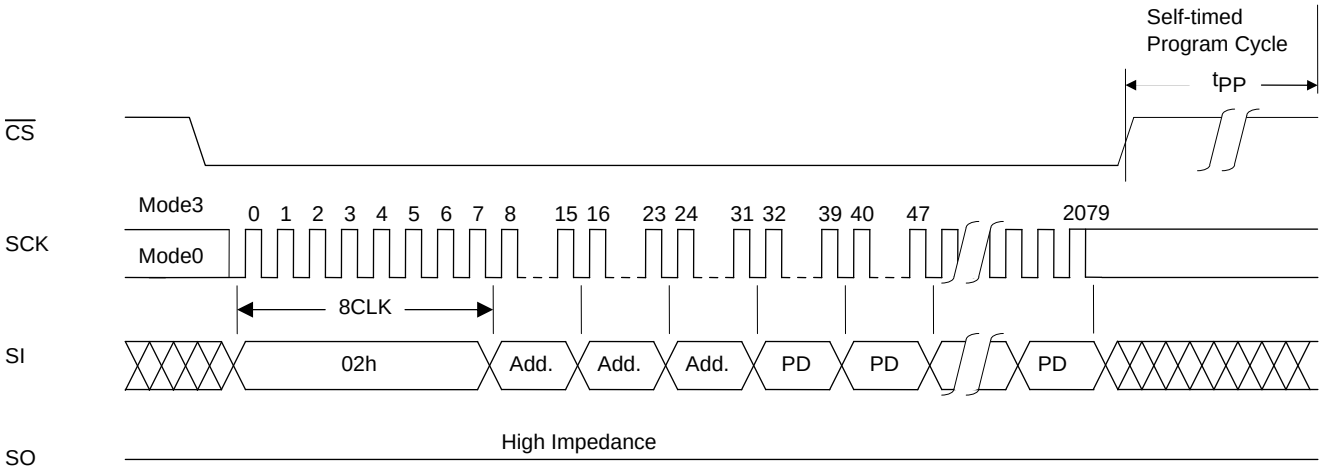

10. Silicon ID Read

Silicon ID read is an operation that reads the manufacturer code and device code information. "Table 6 Silicon ID codes table" lists the silicon ID codes. The silicon ID read command is not accepted during writing.

Two methods are used for silicon ID reading. The first method involves inputting the 9Fh command: the setting is completed with only the first bus cycle input, and in subsequent bus cycles the manufacturer code 62h and device code 26h are repeatedly output in succession so long as the clock input is continued. Refer to "Figure 16-a Silicon ID read 1" for the waveforms.

The second method involves inputting the ABh command. This command consists of the first through fourth bus cycles, and the silicon ID can be read when 16 dummy bits and an 8-bit address are input after (ABh). When address A0 is "0", the manufacturer code 62h is read in the fifth bus cycle, and the device code 26h is read in the sixth bus cycle. "Figure 16-b Silicon ID read 2" shows the timing waveforms. If, after the manufacturer code or device code has been read, the SCK input is continued, the manufacturer code and device code are output alternately with each bus cycle. When address A0 is "1", reading starts with device code 26h in the fifth bus cycle.

Table 6 Silicon ID Codes

	Address A0	Output Code
Manufacturer code	0	62h
Device code	1	27h

The data is output starting with the falling clock edge of the fourth bus cycle bit 0, and silicon ID reading ends at the rising $\overline{CS}$ edge.

Figure 16-a Silicon ID Read 1

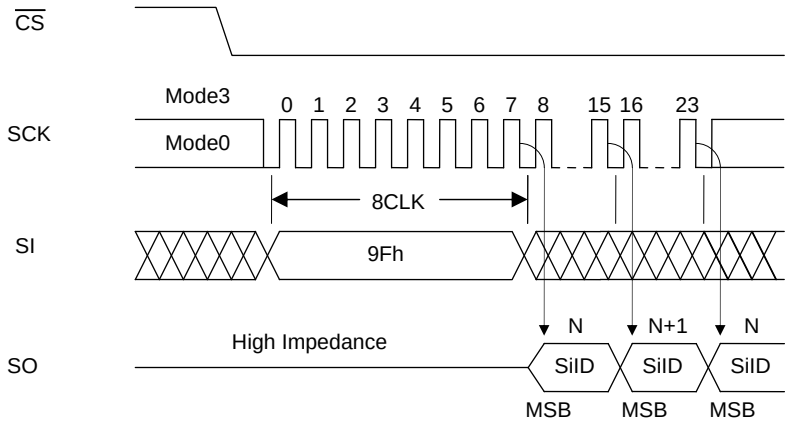

Figure 16-b Silicon ID Read 2

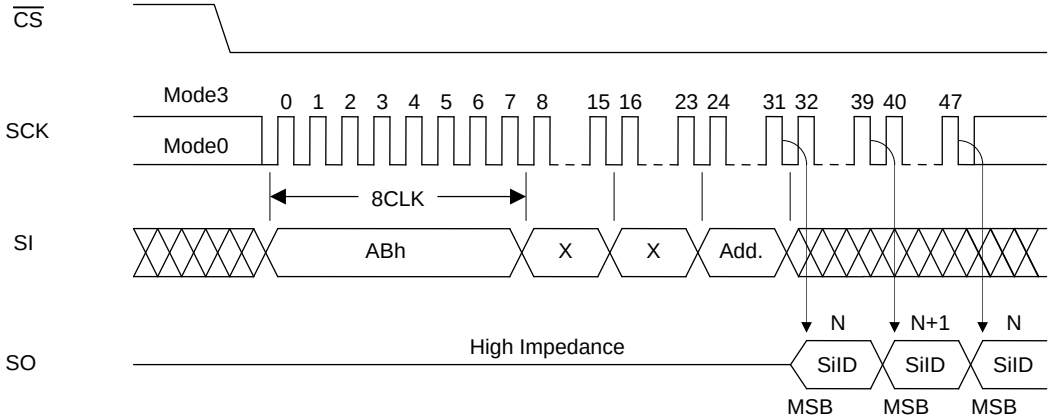

11. Hold Function

Using the $\overline{HOLD}$ pin, the hold function suspends serial communication (it places it in the hold status). "Figure 17 $\overline{HOLD}$" shows the timing waveforms. The device is placed in the hold status at the falling $\overline{HOLD}$ edge while the logic level of SCK is low, and it exits from the hold status at the rising $\overline{HOLD}$ edge. When the logic level of SCK is high, $\overline{HOLD}$ must not rise or fall. The hold function takes effect when the logic level of $\overline{CS}$ is low, the hold status is exited and serial communication is reset at the rising $\overline{CS}$ edge. In the hold status, the SO output is in the high-impedance state, and SI and SCK are "don't care".

Figure 17 $\overline{HOLD}$

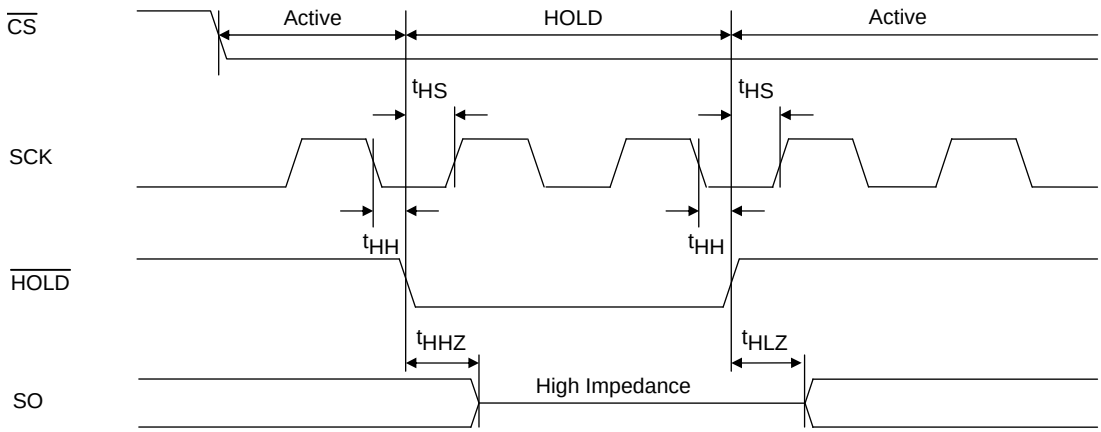

12. Power-on

In order to protect against unintentional writing, $\overline{CS}$ must be kept at V_{DD} At power-on. After power-on, the supply voltage has stabilized at 2.70 V or higher, wait for 100 μs (t_{PU_READ}) before inputting the command to start a read operation. Similarly, wait for 10 ms (t_{PU_WRITE}) after the voltage has stabilized before inputting the command to start a write operation.

Figure 18 Power-on Timing

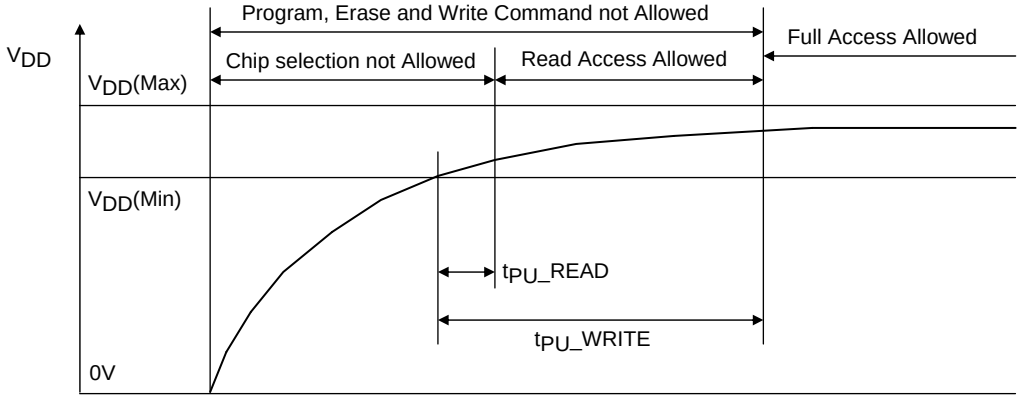

13. Hardware Data Protection

In order to protect against unintentional writing at power-on, the LE25W81QE incorporates a power-on reset function. The following conditions must be met in order to ensure that the power reset circuit will operate stably.
No guarantees are given for data in the event of an instantaneous power failure occurring during the writing period.

Figure 19 Power-down Timing

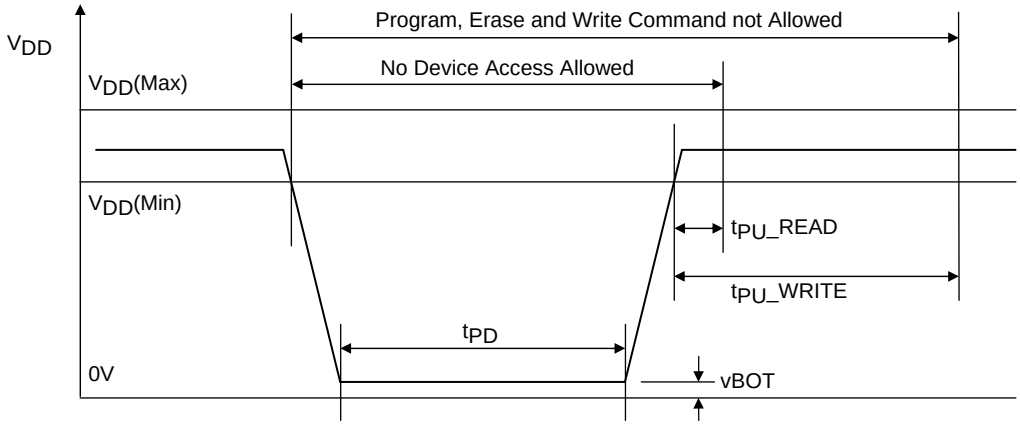

14. Software Data Protection

The LE25W81QE eliminates the possibility of unintentional operations by not recognizing commands under the following conditions.

- When a write command is input and the rising $\overline{CS}$ edge timing is not in a bus cycle (8 CLK units of SCK)
- When the page program data is not in 1-byte increments
- When the status register write command is input for 2 bus cycles or more

15. Decoupling Capacitor

A 0.1 μF ceramic capacitor must be provided to each device and connected between V_{DD} and V_{SS} in order to ensure that the device will operate stably.

Specifications

Absolute Maximum Ratings

Parameter	Symbol	Conditions	Ratings	unit
Maximum supply voltage	V_{DD} max	With respect to V_{SS}	−0.5 to +4.6	V
DC voltage (all pins)	VIN/VOUT	With respect to V_{SS}	−0.5 to V_{DD}+0.5	V
Storage temperature	Tstg		−55 to +150	°C

Stresses exceeding those listed in the Maximum Ratings table may damage the device. If any of these limits are exceeded, device functionality should not be assumed, damage may occur and reliability may be affected.

Operating Conditions

Parameter	Symbol	Conditions	Ratings	unit
Operating supply voltage	V_{DD}		2.45 to 3.6	V
Operating ambient temperature	Topr	Read Operation	−20 to 70	°C
		Write Operation	0 to 70	°C

Allowable DC Operating Conditions

Parameter	Symbol	Conditions		Ratings min	Ratings typ	Ratings max	unit
Read mode operating current	I_{CCR}	$\overline{CS}$ = 0.1V_{DD}, $\overline{HOLD}$ = $\overline{WP}$= 0.9V_{DD} SI = 0.1V_{DD} / 0.9V_{DD}, SO = open V_{DD} = V_{DD} max	operating frequency = 30 MHz			6	mA
Write mode operating current (erase+page program)	I_{CCW}	V_{DD} = V_{DD} max, t_{SSE} = 80 ms, t_{SE} = 100 ms, t_{CHE} = 250 ms, t_{PP} = 0.5 ms				15	mA
CMOS standby current	I_{SB}	$\overline{CS}$ = $\overline{HOLD}$ = $\overline{WP}$ = V_{DD}−0.3 V, SI = V_{IH} / V_{IL}, SO = open, V_{DD} = V_{DD} max	0°C to 70°C			10	μA
Input leakage current	I_{LI}	V_{IN} = V_{SS} to V_{DD}, V_{DD} = V_{DD} max				2	μA
Output leakage current	I_{LO}	V_{IN} = V_{SS} to V_{DD}, V_{DD} = V_{DD} max				2	μA
Input low voltage	V_{IL}	V_{DD} = V_{DD} max		−0.3		0.3V_{DD}	V
Input high voltage	V_{IH}	V_{DD} = V_{DD} min		0.7V_{DD}		V_{DD}+0.3	V
Output low voltage	V_{OL}	I_{OL} = 100 μA, V_{DD} = V_{DD} min				0.2	V
		I_{OL} = 1.6 mA, V_{DD} = V_{DD} min				0.4	
Output high voltage	V_{OH}	I_{OH} = −100 μA, V_{DD} = V_{DD} min		V_{DD}−0.2			V

Functional operation above the stresses listed in the Recommended Operating Ranges is not implied. Extended exposure to stresses beyond the Recommended Operating Ranges limits may affect device reliability.

Power-on Timing

Parameter	Symbol	Ratings min	Ratings max	unit
Time from power-on to read operation	t_{PU_READ}	100		μs
Time from power-on to write operation	t_{PU_WRITE}	10		ms
Power-down time	t_{PD}	10		ms
Power-down voltage	v_{BOT}		0.2	V

Pin Capacitance at Ta = 25°C, f = 1 MHz

Parameter	Symbol	Conditions	Ratings max	unit
Output pin capacitance	C_{DQ}	V_{DQ} = 0 V	12	pF
Input pin Capacitance	C_{IN}	V_{IN} = 0 V	6	pF

Note : These parameter values do not represent the results of measurements undertaken for all devices but rather values for some of the sampled devices.

AC Characteristics

Parameter	Symbol	Ratings			unit
		min	typ	max	
Clock frequency	f_{CLK}			30	MHz
SCK logic high level pulse width	t_{CLHI}	16			ns
SCK logic low level pulse width	t_{CLLO}	16			ns
Input signal rising/falling time	t_{RF}			20	ns
$\overline{CS}$ setup time	t_{CSS}	10			ns
SCK setup time	t_{CLS}	10			ns
Data setup time	t_{DS}	5			ns
Data hold time	t_{DH}	5			ns
$\overline{CS}$ hold time	t_{CSH}	10			ns
SCK hold time	t_{CLH}	10			ns
$\overline{CS}$ wait pulse width	t_{CPH}	25			ns
Output high impedance time from $\overline{CS}$	t_{CHZ}			15	ns
Output data time from SCK	t_V		12	15	ns
Output data hold time	t_{HO}	1			ns
$\overline{HOLD}$ setup time	t_{HS}	7			ns
$\overline{HOLD}$ hold time	t_{HH}	3			ns
Output low impedance time from $\overline{HOLD}$	t_{HLZ}			9	ns
Output high impedance time from $\overline{HOLD}$	t_{HHZ}			9	ns
$\overline{WP}$ setup time	t_{WPS}	20			ns
$\overline{WP}$ hold time	t_{WPH}	20			ns
Write status register time	t_{SRW}		5	15	ms
Page programming cycle time	t_{PP}		0.3	1.0	ms
Small sector erase cycle time	t_{SSE}		0.08	0.3	s
Sector erase cycle time	t_{SE}		0.1	0.4	s
Chip erase cycle time	t_{CHE}		0.25	3	s
Power-down time	t_{DP}			3	μs
Power-down recovery time	t_{PRB}			3	μs
Output low impedance time from SCK	t_{CLZ}	0			ns

Product parametric performance is indicated in the Electrical Characteristics for the listed test conditions, unless otherwise noted. Product performance may not be indicated by the Electrical Characteristics if operated under different conditions.

AC Test Conditions

Input pulse level····· 0 V, 2.6 V
Input rising/falling time ···· 5 ns
Input timing level ····· $0.3V_{DD}$, $0.7V_{DD}$
Output timing level ····· $1/2 \times V_{DD}$
Output load ····· 30 pF

Note : As the test conditions for "typ", the measurements are conducted using 2.6V for V_{DD} at room temperature.

Figure 20 Status Register Write Flowchart

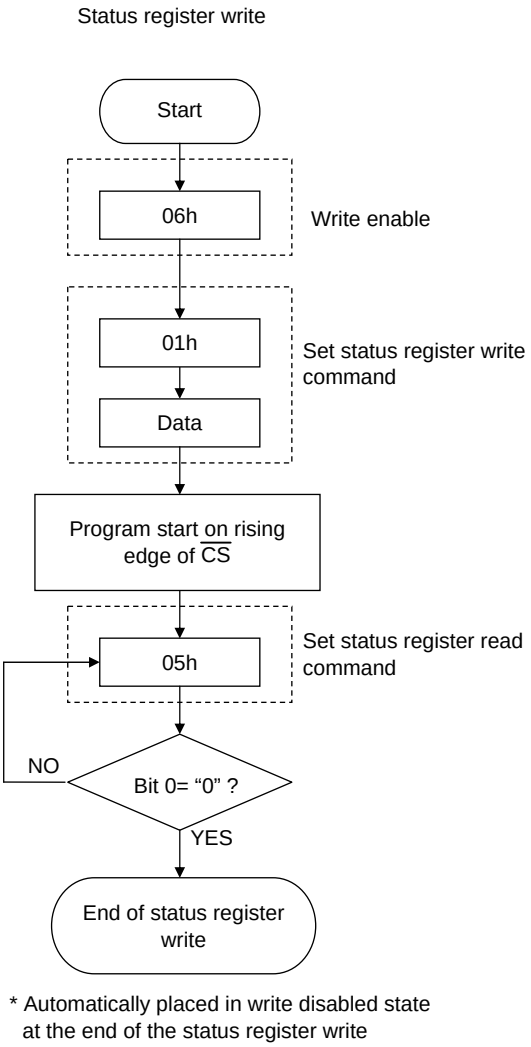

Figure 21 Erase Flowcharts

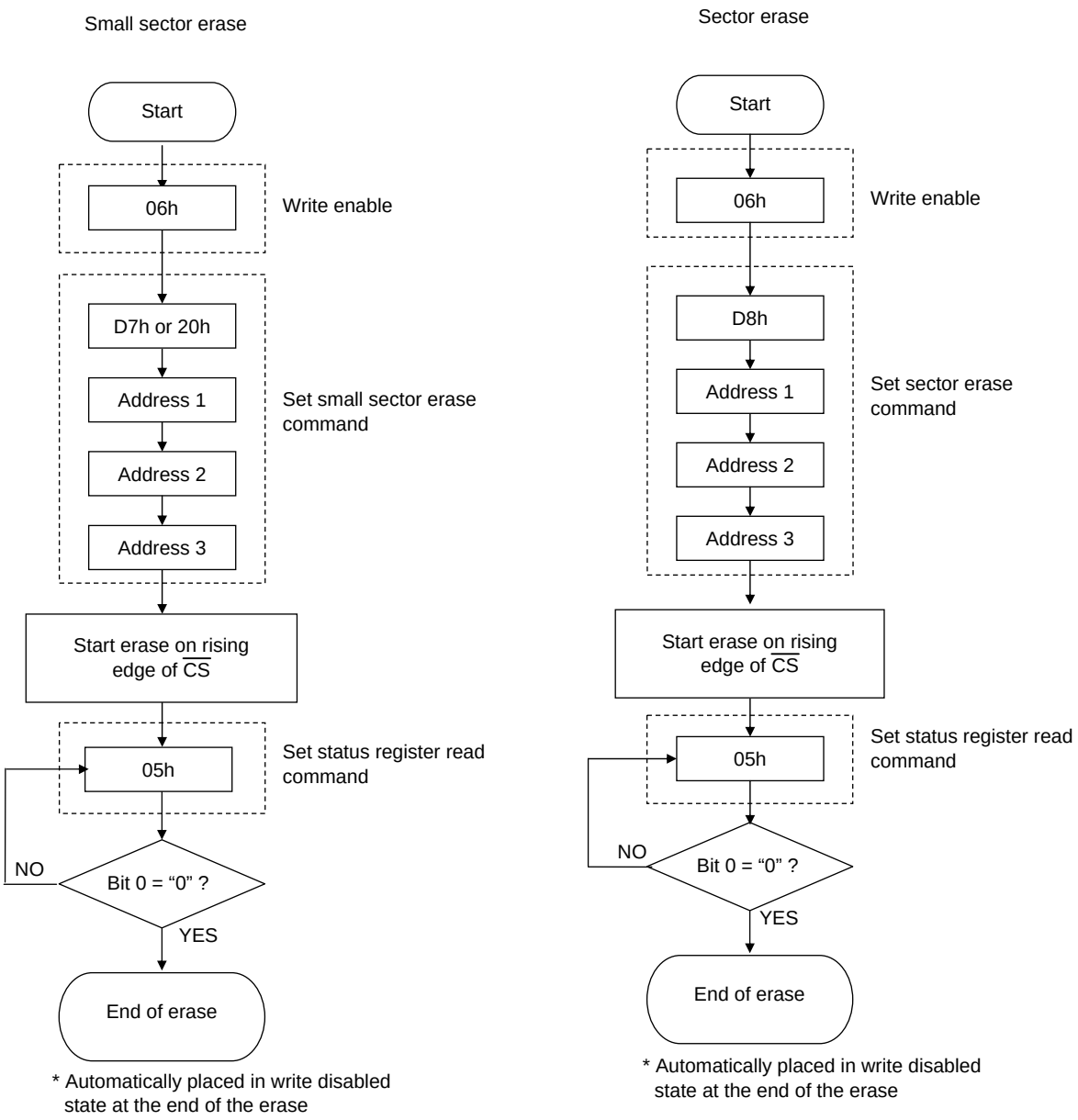

Figure 22 Page Program Flowchart

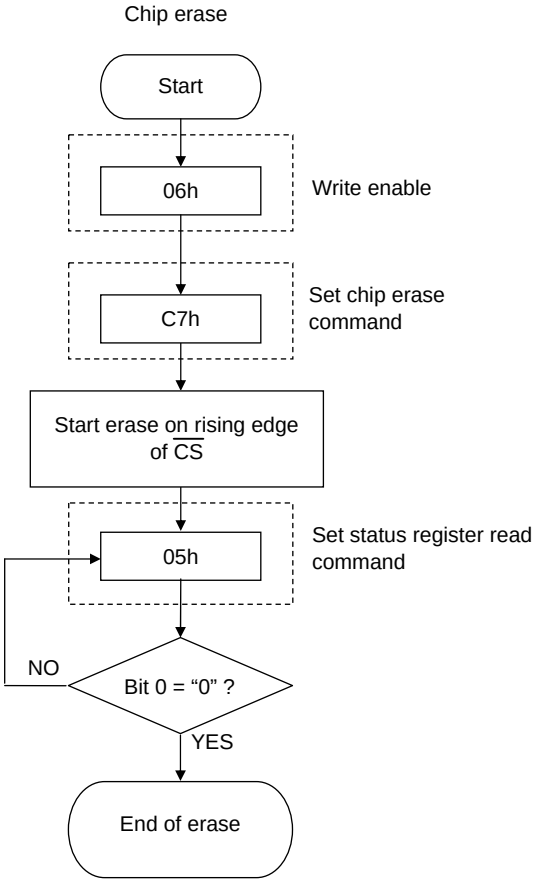

* Automatically placed in write disabled state at the end of the erase

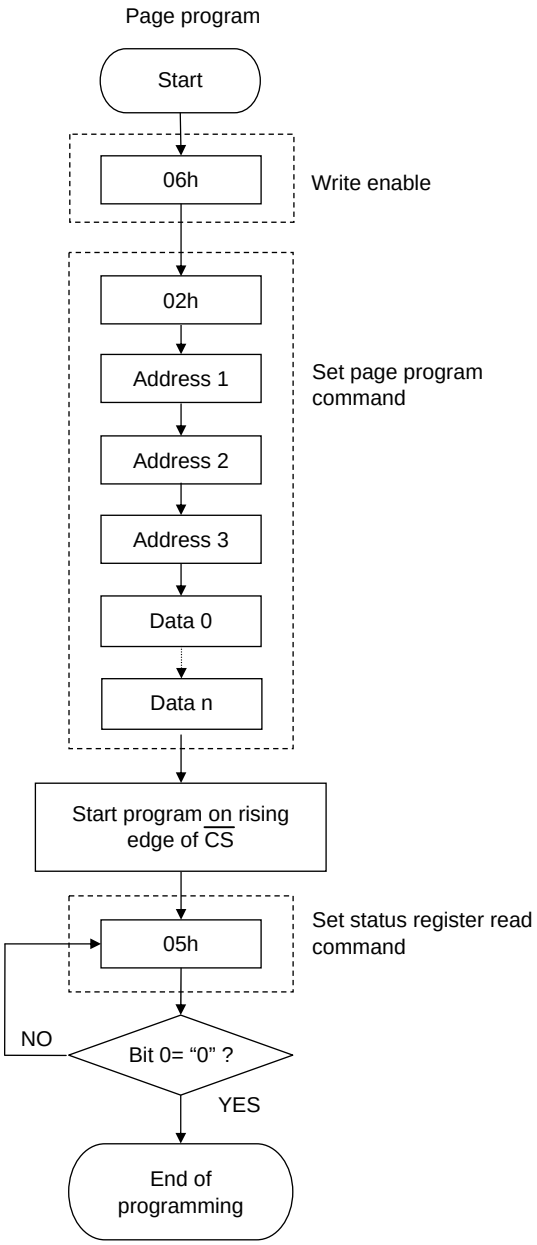

* Automatically placed in write disabled state at the end of the programming operation.

Figure 23 Making Diagrams

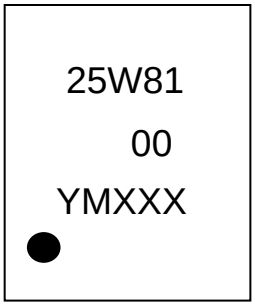

25W81 = Specific Device Code
Y = Production Year, Last Number of A.D.
M = Production month
XXX = Serial No.

ORDERING INFORMATION

Device	Package	Shipping (Qty / Packing)
LE25W81QES00-AH-1	VDFN8 5x6, 1.27P (Pb-Free / Halogen Free)	2000 / Tape & Real

† For information on tape and reel specifications, including part orientation and tape sizes, please refer to our Tape and Reel Packaging Specifications Brochure, BRD8011/D. http://www.onsemi.com/pub_link/Collateral/BRD8011-D.PDF

ON Semiconductor and the ON Semiconductor logo are trademarks of Semiconductor Components Industries, LLC dba ON Semiconductor or its subsidiaries in the United States and/or other countries. ON Semiconductor owns the rights to a number of patents, trademarks, copyrights, trade secrets, and other intellectual property. A listing of ON Semiconductor's product/patent coverage may be accessed at www.onsemi.com/site/pdf/Patent-Marking.pdf. ON Semiconductor reserves the right to make changes without further notice to any products herein. ON Semiconductor makes no warranty, representation or guarantee regarding the suitability of its products for any particular purpose, nor does ON Semiconductor assume any liability arising out of the application or use of any product or circuit, and specifically disclaims any and all liability, including without limitation special, consequential or incidental damages. Buyer is responsible for its products and applications using ON Semiconductor products, including compliance with all laws, regulations and safety requirements or standards, regardless of any support or applications information provided by ON Semiconductor. "Typical" parameters which may be provided in ON Semiconductor data sheets and/or specifications can and do vary in different applications and actual performance may vary over time. All operating parameters, including "Typicals" must be validated for each customer application by customer's technical experts. ON Semiconductor does not convey any license under its patent rights nor the rights of others. ON Semiconductor products are not designed, intended, or authorized for use as a critical component in life support systems or any FDA Class 3 medical devices or medical devices with a same or similar classification in a foreign jurisdiction or any devices intended for implantation in the human body. Should Buyer purchase or use ON Semiconductor products for any such unintended or unauthorized application, Buyer shall indemnify and hold ON Semiconductor and its officers, employees, subsidiaries, affiliates, and distributors harmless against all claims, costs, damages, and expenses, and reasonable attorney fees arising out of, directly or indirectly, any claim of personal injury or death associated with such unintended or unauthorized use, even if such claim alleges that ON Semiconductor was negligent regarding the design or manufacture of the part. ON Semiconductor is an Equal Opportunity/Affirmative Action Employer. This literature is subject to all applicable copyright laws and is not for resale in any manner.