# LE25U40CQE

# Serial Flash Memory
# 4 Mb (512K x 8)

ON Semiconductor®

www.onsemi.com

## Overview

The LE25U40CQE is a SPI bus flash memory device with a 4M bit (512K × 8-bit) configuration that adds a high performance Dual output and Dual I/O function. It uses a single 2.5 V power supply. While making the most of the features inherent to a serial flash memory device, the LE25U40CQE is housed in an 8-pin ultra-miniature package. All these features make this device ideally suited to storing program in applications such as portable information devices, which are required to have increasingly more compact dimensions. The LE25U40CQE also has a small sector erase capability which makes the device ideal for storing parameters or data that have fewer rewrite cycles and conventional EEPROMs cannot handle due to insufficient capacity.

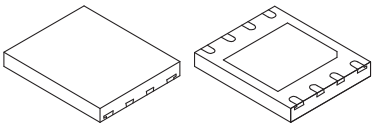

VDFN8 5x6, 1.27P / VSON8T (6x5)

## Features

- Read/write operations enabled by single 2.5 V power supply :
  2.3 to 3.6 V supply voltage range
- Operating frequency : 40 MHz
- Temperature range : –40 to +85°C
- Serial interface :
  SPI mode 0, mode 3 supported / Dual Output, Dual I/O supported
- Sector size : 4K bytes/small sector, 64K bytes/sector
- Small sector erase, sector erase, chip erase functions
- Page program function (256 bytes / page)
- Block protect function
- Highly reliable read/write
  - Number of rewrite times : 100,000 times
  - Small sector erase time : 40 ms (typ), 150 ms (max)
  - Sector erase time : 80 ms (typ), 250 ms (max)
  - Chip erase time : 250 ms (typ), 2.0 s (max)
  - Page program time : 4.0 ms / 256 bytes (typ), 5.0 ms / 256 bytes (max)
- Status functions : Ready / busy information, protect information
- Data retention period : 20 years
- Package : VDFN8 5×6, 1.27P / VSON8T (6×5)

* This product is licensed from Silicon Storage Technology, Inc. (USA).

**ORDERING INFORMATION**

See detailed ordering and shipping information on page 23 of this data sheet.

© Semiconductor Components Industries, LLC, 2017

## Package Dimensions

unit : mm

**VDFN8 5x6, 1.27P / VSON8T (6x5)**
CASE 509AG
ISSUE O

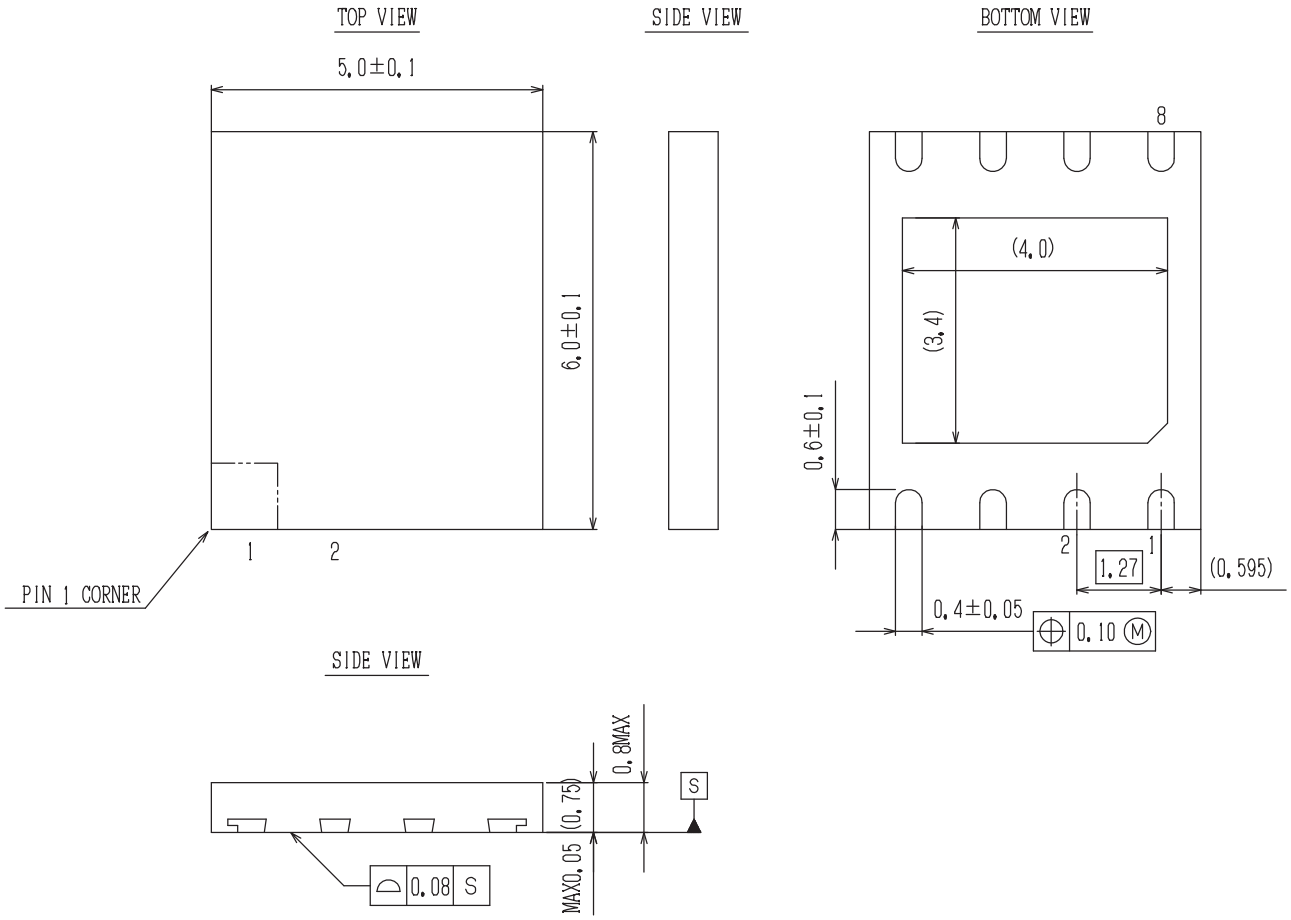


## Figure 1 Pin Assignments

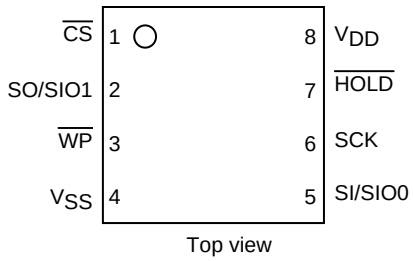


Top view

## Figure 2 Block Diagram

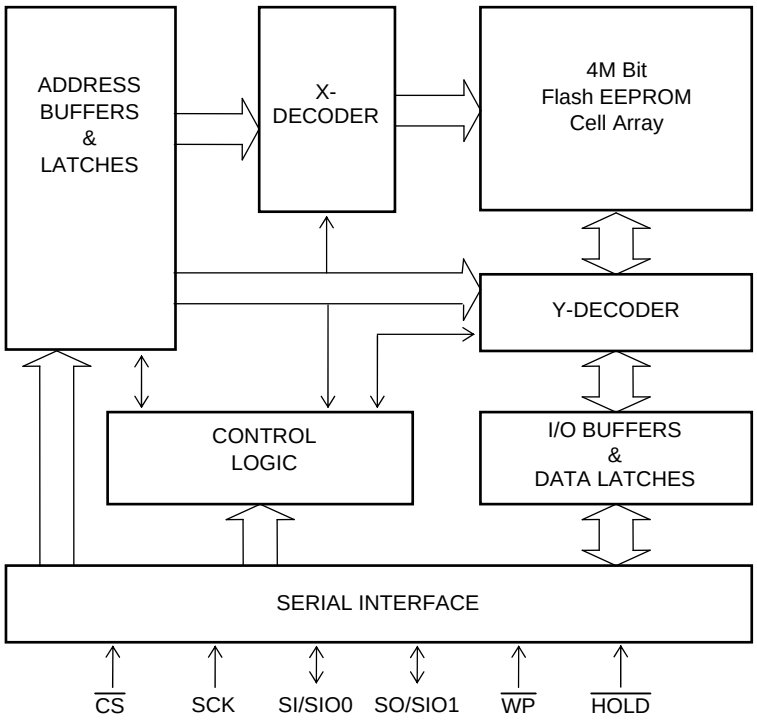


### Table 1 Pin Description

| Symbol | Pin Name | Description |
|---|---|---|
| SCK | Serial clock | This pin controls the data input/output timing.<br>The input data and addresses are latched synchronized to the rising edge of the serial clock, and the data is output synchronized to the falling edge of the serial clock. |
| SI/SIO0 | Serial data input<br>/ Serial data input output | The data and addresses are input from this pin, and latched internally synchronized to the rising edge of the serial clock. It changes into the output pin at Dual Output and it changes into the input output pin at Dual I/O. |
| SO/SIO1 | Serial data input<br>/ Serial data input output | The data stored inside the device is output from this pin synchronized to the falling edge of the serial clock. It changes into the output pin at Dual Output and it changes into the input output pin at Dual I/O. |
| $\overline{CS}$ | Chip select | The device becomes active when the logic level of this pin is low; it is deselected and placed in standby status when the logic level of the pin is high. |
| $\overline{WP}$ | Write protect | The status register write protect (SRWP) takes effect when the logic level of this pin is low. |
| $\overline{HOLD}$ | Hold | Serial communication is suspended when the logic level of this pin is low. |
| $V_{DD}$ | Power supply | This pin supplies the 2.3 to 3.6 V supply voltage. |
| $V_{SS}$ | Ground | This pin supplies the 0 V supply voltage. |

## Device Operation

The read, erase, program and other required functions of the device are executed through the command registers. The serial I/O corrugate is shown in Figure 3 and the command list is shown in Table 2. At the falling $\overline{CS}$ edge the device is selected, and serial input is enabled for the commands, addresses, etc. These inputs are normalized in 8 bit units and taken into the device interior in synchronization with the rising edge of SCK, which causes the device to execute operation according to the command that is input.

The LE25U40CQE supports both serial interface SPI mode 0 and SPI mode 3. At the falling $\overline{CS}$ edge, SPI mode 0 is automatically selected if the logic level of SCK is low, and SPI mode 3 is automatically selected if the logic level of SCK is high.

### Figure 3 I/O waveforms

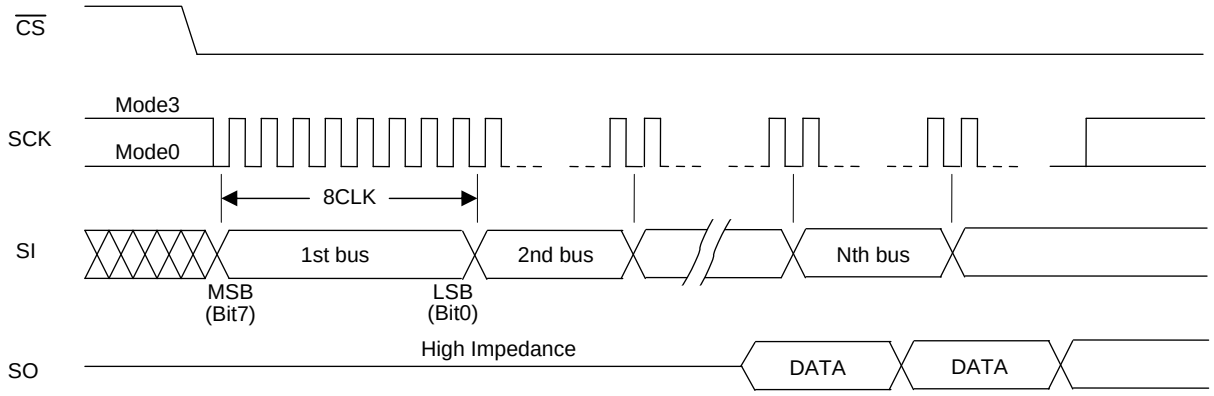


### Table 2 Command Settings

| Command | 1st bus cycle | 2nd bus cycle | 3rd bus cycle | 4th bus cycle | 5th bus cycle | 6th bus cycle | Nth bus cycle |
|---|---|---|---|---|---|---|---|
| Read | 03h | A23-A16 | A15-A8 | A7-A0 | RD *1 | RD *1 | RD *1 |
| High Speed Read | 0Bh | A23-A16 | A15-A8 | A7-A0 | X | RD *1 | RD *1 |
| Dual Read | 3Bh | A23-A16 | A15-A8 | A7-A0 | Z | RD *1 | RD *1 |
| Dual I/O Read | BBh | A23-A8 | A7-A0,X, Z | RD *1 | RD *1 | RD *1 | RD *1 |
| Small sector erase | 20h / D7h | A23-A16 | A15-A8 | A7-A0 | | | |
| Sector erase | D8h | A23-A16 | A15-A8 | A7-A0 | | | |
| Chip erase | 60h / C7h | | | | | | |
| Page program | 02h | A23-A16 | A15-A8 | A7-A0 | PD *2 | PD *2 | PD *2 |
| Write enable | 06h | | | | | | |
| Write disable | 04h | | | | | | |
| Power down | B9h | | | | | | |
| Status register read | 05h | | | | | | |
| Status register write | 01h | DATA | | | | | |
| JEDEC ID read | 9Fh | | | | | | |
| ID read | ABh | X | X | X | | | |
| power down | B9h | | | | | | |
| Exit power down mode | ABh | | | | | | |

Explanatory notes for Table 2

"X" signifies "don't care" (that is to say, any value may be input)., "Z" signifies " High Impedance ".

The "h" following each code indicates that the number given is in hexadecimal notation.

Addresses A23 to A19 for all commands are "Don't care".

*1: "RD" stands for read data. *2: "PD" stands for page program data.

**Table 3 Command Settings**

4M Bit

| sector(64KB) | small sector | address space(A23 to A0) | |
|---|---|---|---|
| 7 | 127 | 07F000h | 07FFFFh |
| | to | | |
| | 112 | 070000h | 070FFFh |
| 6 | 111 | 06F000h | 06FFFFh |
| | to | | |
| | 96 | 060000h | 060FFFh |
| 5 | 95 | 05F000h | 05FFFFh |
| | to | | |
| | 80 | 050000h | 050FFFh |
| 4 | 79 | 04F000h | 04FFFFh |
| | to | | |
| | 64 | 040000h | 040FFFh |
| 3 | 63 | 03F000h | 03FFFFh |
| | to | | |
| | 48 | 030000h | 030FFFh |
| 2 | 47 | 02F000h | 02FFFFh |
| | to | | |
| | 32 | 020000h | 020FFFh |
| 1 | 31 | 01F000h | 01FFFFh |
| | to | | |
| | 16 | 010000h | 010FFFh |
| 0 | 15 | 00F000h | 00FFFFh |
| | to | | |
| | 2 | 002000h | 002FFFh |
| | 1 | 001000h | 001FFFh |
| | 0 | 000000h | 000FFFh |

## Description of Commands and Their Operations

A detailed description of the functions and operations corresponding to each command is presented below.

### 1. Standard SPI read

There are two read commands, the standard SPI read command and High-speed read command.

### 1-1. Read command

Consisting of the first through fourth bus cycles, the 4 bus cycle read command inputs the 24-bit addresses following (03h). The data is output from SO on the falling clock edge of fourth bus cycle bit 0 as a reference. "Figure 4-a Read" shows the timing waveforms.

**Figure 4-a Read**

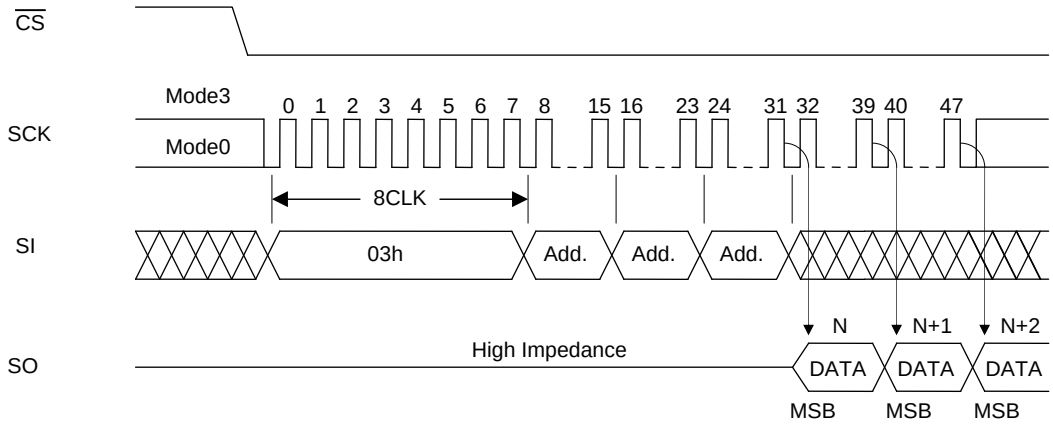


### 1-2. High-speed Read command

Consisting of the first through fifth bus cycles, the High-speed read command inputs the 24-bit addresses and 8 dummy bits following (0Bh). The data is output from SO using the falling clock edge of fifth bus cycle bit 0 as a reference. "Figure 4-b High-speed Read" shows the timing waveforms.

**Figure 4-b High-speed Read**

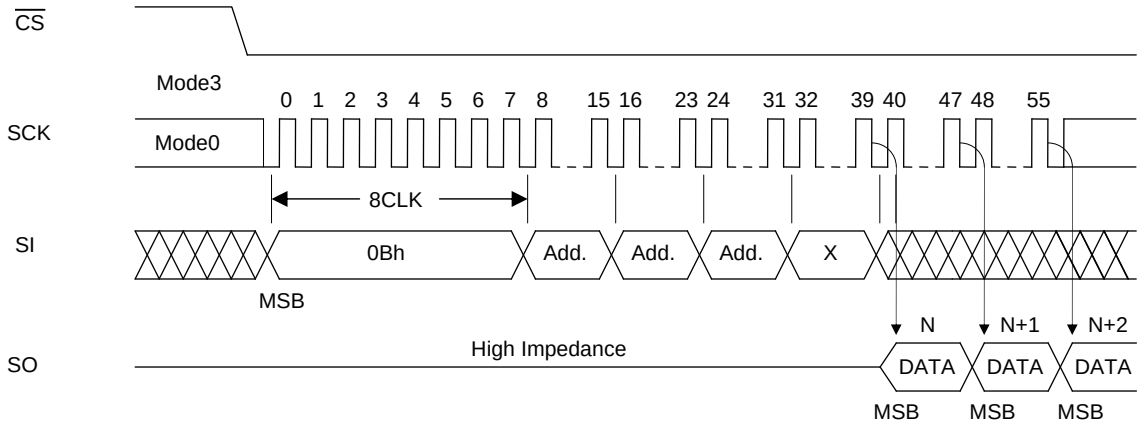

## 2. Dual read

There are two Dual read commands, the Dual read command and the Dual I/O read command. They achieve the twice speed-up from a High-speed read command.

### 2-1. Dual Read command

The Dual read command changes SI/SIO0 into the output pin function in addition to SO/SIO1, makes the data output x2 bit and has achieved a high-speed output. Consisting of the first through fifth bus cycles, the Dual read command inputs the 24-bit addresses and 8 dummy bits following (3Bh). DATA1 (Bit7, BIt5, Bit3 and Bit1) is output from SI/SIO0 and DATA0 (Bit6, Bit4, Bit2 and Bit0) is output from SO/SIO1 on the falling clock edge of fifth bus cycle bit 0 as a reference. "Figure 5-a Dual Read" shows the timing waveforms.

**Figure 5-a Dual Read**

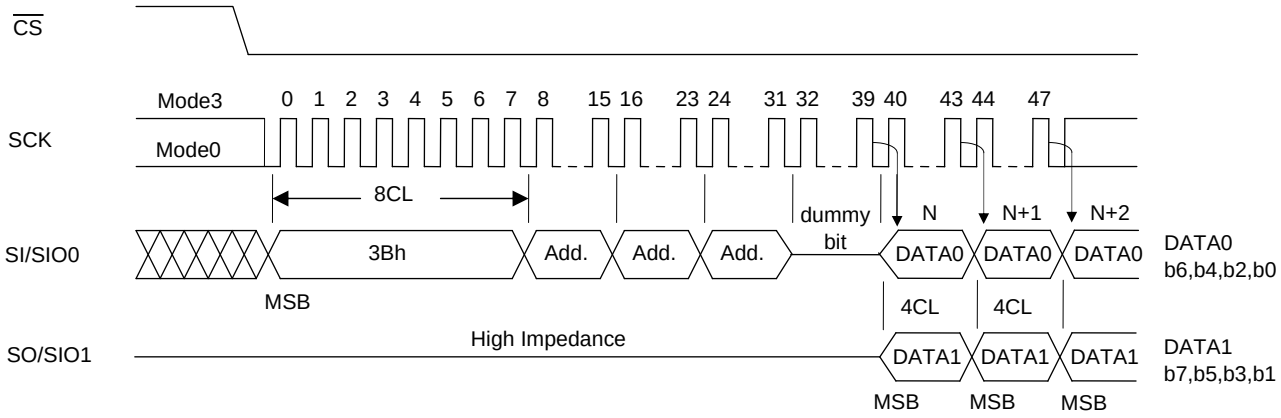


### 2-2. Dual I/O Read command

The Dual I/O read command changes SI/SIO0 and SO/SIO1 into the input output pin function, makes the data input and output x2 bit and has achieved a high-speed output. Consisting of the first through third bus cycles, the Dual I/O read command inputs the 24-bit addresses and 4 dummy clocks following (BBh). The format of the address input and the dummy bit input is the x2 bit input. Add1 (A23, A21, -, A3 and A1) is input from S0/SIO1 and Add0 (A22, A20, -, A2 and A0) is input from SI/SIO0. 2CLK of the latter half of the dummy clock is in the state of high impedance, the controller can switch I/O for this period. DATA1 (Bit7, BIt5, Bit3 and Bit1) is output from SI/SIO0 and DATA0 (Bit6, Bit4, Bit2 and Bit0) is output from SO/SIO1 on the falling clock edge of third bus cycle bit 0 as a reference. "Figure 5-b Dual I/O Read" shows the timing waveforms.

**Figure 5-b Dual I/O Read**

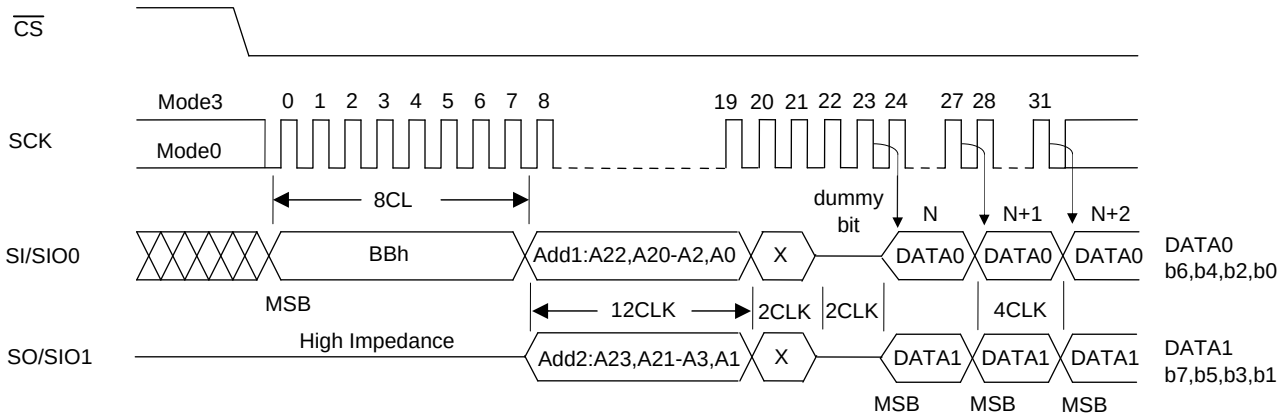


When SCK is input continuously after the read command has been input and the data in the designated addresses has been output, the address is automatically incremented inside the device while SCK is being input, and the corresponding data is output in sequence. If the SCK input is continued after the internal address arrives at the highest address (7FFFFh), the internal address returns to the lowest address (00000h), and data output is continued. By setting the logic level of CS to high, the device is deselected, and the read cycle ends. While the device is deselected, the output pin SO is in a high-impedance state.

### 3. Status Registers

The status registers hold the operating and setting statuses inside the device, and this information can be read (status register read) and the protect information can be rewritten (status register write). There are 8 bits in total, and "Table 4 Status registers" gives the significance of each bit.

**Table 4 Status Registers**

| Bit | Name | Logic | Function | Power-on Time Information |
|---|---|---|---|---|
| Bit0 | $\overline{\text{RDY}}$ | 0 | Ready | 0 |
| | | 1 | Erase/Program | |
| Bit1 | WEN | 0 | Write disabled | 0 |
| | | 1 | Write enabled | |
| Bit2 | BP0 | 0 | Block protect information<br>Protecting area switch | Nonvolatile information |
| | | 1 | | |
| Bit3 | BP1 | 0 | | Nonvolatile information |
| | | 1 | | |
| Bit4 | BP2 | 0 | | Nonvolatile information |
| | | 1 | | |
| Bit5 | TB | 0 | Block protect<br>Upper side/Lower side switch | Nonvolatile information |
| | | 1 | | |
| Bit6 | | | Reserved bits | 0 |
| Bit7 | SRWP | 0 | Status register write enabled | Nonvolatile information |
| | | 1 | Status register write disabled | |

### 3-1. Status register read

The contents of the status registers can be read using the status register read command. This command can be executed even during the following operations.

- Small sector erase, sector erase, chip erase
- Page program
- Status register write

"Figure 6 Status Register Read" shows the timing waveforms of status register read. Consisting only of the first bus cycle, the status register command outputs the contents of the status registers synchronized to the falling edge of the clock (SCK) with which the eighth bit of (05h) has been input. In terms of the output sequence, SRWP (bit 7) is the first to be output, and each time one clock is input, all the other bits up to $\overline{\text{RDY}}$ (bit 0) are output in sequence, synchronized to the falling clock edge. If the clock input is continued after $\overline{\text{RDY}}$ (bit 0) has been output, the data is output by returning to the bit (SRWP) that was first output, after which the output is repeated for as long as the clock input is continued. The data can be read by the status register read command at any time (even during a program or erase cycle).

**Figure 6 Status Register Read**

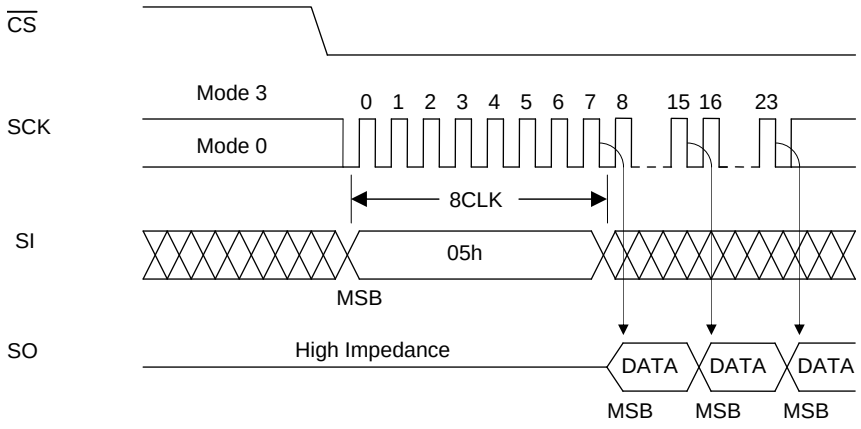

### 3-2. Status register write

The information in status registers BP0, BP1, BP2, TB and SRWP can be rewritten using the status register write command. RDY, WEN and bit 6 are read-only bits and cannot be rewritten. The information in bits BP0, BP1, BP2, TB and SRWP is stored in the non-volatile memory, and when it is written in these bits, the contents are retained even at power-down. "Figure 6 Status Register Write" shows the timing waveforms of status register write, and Figure 20 shows a status register write flowchart. Consisting of the first and second bus cycles, the status register write command initiates the internal write operation at the rising CS edge after the data has been input following (01h). Erase and program are performed automatically inside the device by status register write so that erasing or other processing is unnecessary before executing the command. By the operation of this command, the information in bits BP0, BP1, BP2, TB and SRWP can be rewritten. Since bits RDY (bit 0), WEN (bit 1) and bit 6 of the status register cannot be written, no problem will arise if an attempt is made to set them to any value when rewriting the status register. Status register write ends can be detected by RDY of status register read. To initiate status register write, the logic level of the WP pin must be set high and status register WEN must be set to "1".

**Figure 6 Status Register Write**

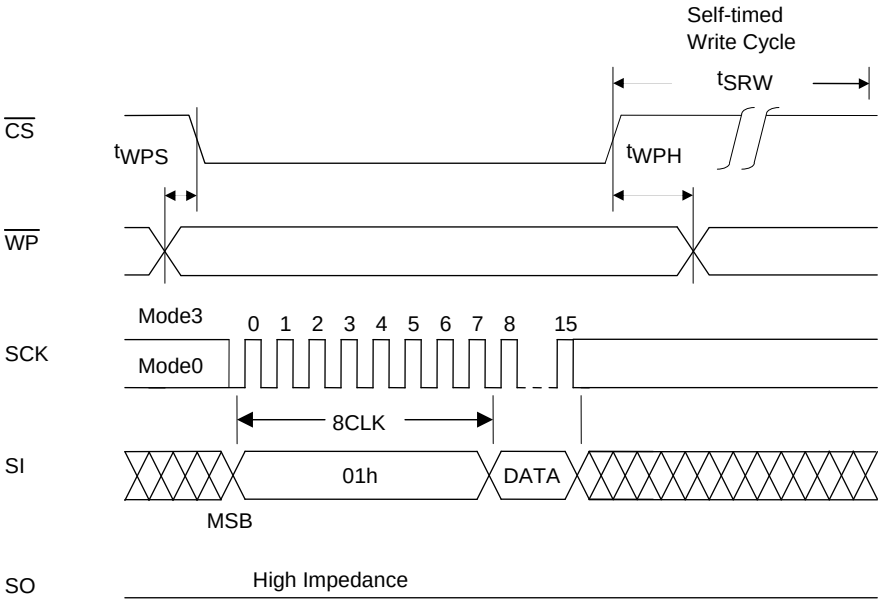


### 3-3. Contents of each status register

#### RDY (Bit 0)

The RDY register is for detecting the write (program, erase and status register write) end. When it is "1", the device is in a busy state, and when it is "0", it means that write is completed.

#### WEN (bit 1)

The WEN register is for detecting whether the device can perform write operations. If it is set to "0", the device will not perform the write operation even if the write command is input. If it is set to "1", the device can perform write operations in any area that is not block-protected.

WEN can be controlled using the write enable and write disable commands. By inputting the write enable command (06h), WEN can be set to "1"; by inputting the write disable command (04h), it can be set to "0." In the following states, WEN is automatically set to "0" in order to protect against unintentional writing.

- At power-on
- Upon completion of small sector erase, sector erase or chip erase
- Upon completion of page program
- Upon completion of status register write

* If a write operation has not been performed inside the LE25U40CQE because, for instance, the command input for any of the write operations (small sector erase, sector erase, chip erase, page program, or status register write) has failed or a write operation has been performed for a protected address, WEN will retain the status established prior to the issue of the command concerned. Furthermore, its state will not be changed by a read operation.

### BP0, BP1, BP2, TB (Bits 2, 3, 4, 5)

Block protect BP0, BP1, BP2 and TB are status register bits that can be rewritten, and the memory space to be protected can be set depending on these bits. For the setting conditions, refer to "Table 5 Protect level setting conditions".

BP0, BP1, and BP2 are used to select the protected area and TB to allocate the protected area to the higher-order address area or lower-order address area.

### Table 5 Protect Level Setting Conditions

| Protect Level | Status Register Bits | | | | Protected Area |
|---|---|---|---|---|---|
| | TB | BP2 | BP1 | BP0 | |
| 0 (Whole area unprotected) | X | 0 | 0 | 0 | None |
| T1 (Upper side 1/8 protected) | 0 | 0 | 0 | 1 | 07FFFFh to 070000h |
| T2 (Upper side 1/4 protected) | 0 | 0 | 1 | 0 | 07FFFFh to 060000h |
| T3 (Upper side 1/2 protected) | 0 | 0 | 1 | 1 | 07FFFFh to 040000h |
| B1 (Lower side 1/8 protected) | 1 | 0 | 0 | 1 | 00FFFFh to 000000h |
| B2 (Lower side 1/4 protected) | 1 | 0 | 1 | 0 | 01FFFFh to 000000h |
| B3 (Lower side 1/2 protected) | 1 | 0 | 1 | 1 | 03FFFFh to 000000h |
| 4 (Whole area protected) | X | 1 | X | X | 07FFFFh to 000000h |

* Chip erase is enabled only when the protect level is 0.

### SRWP (bit 7)

Status register write protect SRWP is the bit for protecting the status registers, and its information can be rewritten. When SRWP is "1" and the logic level of the $\overline{WP}$ pin is low, the status register write command is ignored, and status registers BP0, BP1, BP2, TB and SRWP are protected. When the logic level of the $\overline{WP}$ pin is high, the status registers are not protected regardless of the SRWP state. The SRWP setting conditions are shown in "Table 6 SRWP setting conditions".

### Table 6 SRWP Setting Conditions

| $\overline{WP}$ Pin | SRWP | Status Register Protect State |
|---|---|---|
| 0 | 0 | Unprotected |
| | 1 | Protected |
| 1 | 0 | Unprotected |
| | 1 | Unprotected |

Bit 6 are reserved bits, and have no significance.

## 4. Write Enable

Before performing any of the operations listed below, the device must be placed in the write enable state. Operation is the same as for setting status register WEN to "1", and the state is enabled by inputting the write enable command. "Figure 8 Write Enable" shows the timing waveforms when the write enable operation is performed. The write enable command consists only of the first bus cycle, and it is initiated by inputting (06h).

- Small sector erase, sector erase, chip erase
- Page program
- Status register write

## 5. Write Disable

The write disable command sets status register WEN to "0" to prohibit unintentional writing. "Figure 9 Write Disable" shows the timing waveforms. The write disable command consists only of the first bus cycle, and it is initiated by inputting (04h). The write disable state (WEN "0") is exited by setting WEN to "1" using the write enable command (06h).

**Figure 8 Write Enable**

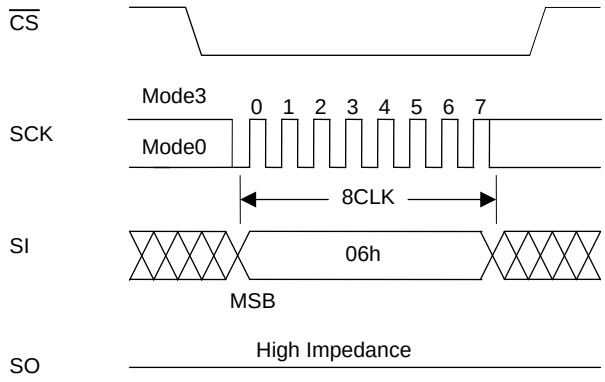


**Figure 9 Write Disable**

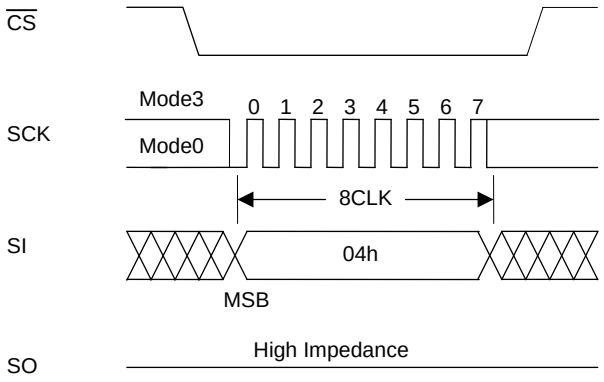


## 6. Power-down

The power-down command sets all the commands, with the exception of the silicon ID read command and the command to exit from power-down, to the acceptance prohibited state (power-down). "Figure 10 Power-down" shows the timing waveforms. The power-down command consists only of the first bus cycle, and it is initiated by inputting (B9h). However, a power-down command issued during an internal write operation will be ignored. The power-down state is exited using the power-down exit command (power-down is exited also when one bus cycle or more of the silicon ID read command (ABh) has been input). "Figure 11 Exiting from Power-down" shows the timing waveforms of the power-down exit command.

**Figure 10 Power-down**

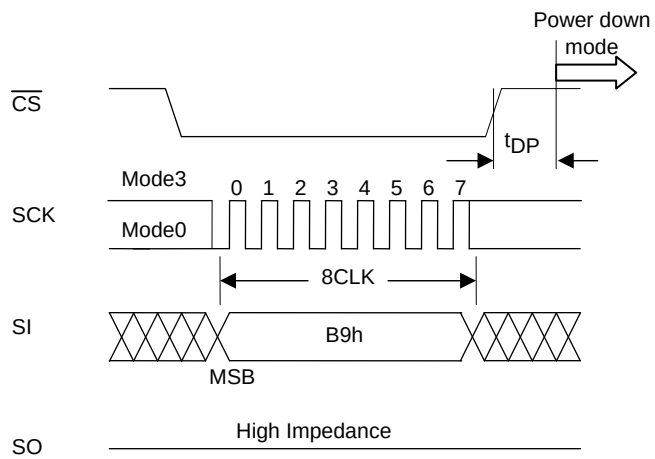


**Figure 11 Exiting from Power-down**

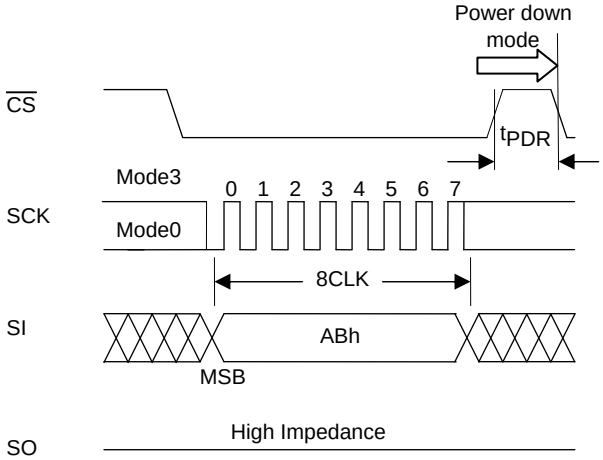

### 7. Small Sector Erase

Small sector erase is an operation that sets the memory cell data in any small sector to "1". A small sector consists of 4K bytes. "Figure 12 Small Sector Erase" shows the timing waveforms, and Figure 21 shows a small sector erase flowchart. The small sector erase command consists of the first through fourth bus cycles, and it is initiated by inputting the 24-bit addresses following (20h) or (D7h). Addresses A18 to A12 are valid, and Addresses A23 to A19 are "don't care". After the command has been input, the internal erase operation starts from the rising $\overline{CS}$ edge, and it ends automatically by the control exercised by the internal timer. Erase end can also be detected using status register $\overline{RDY}$.

**Figure 12 Small Sector Erase**

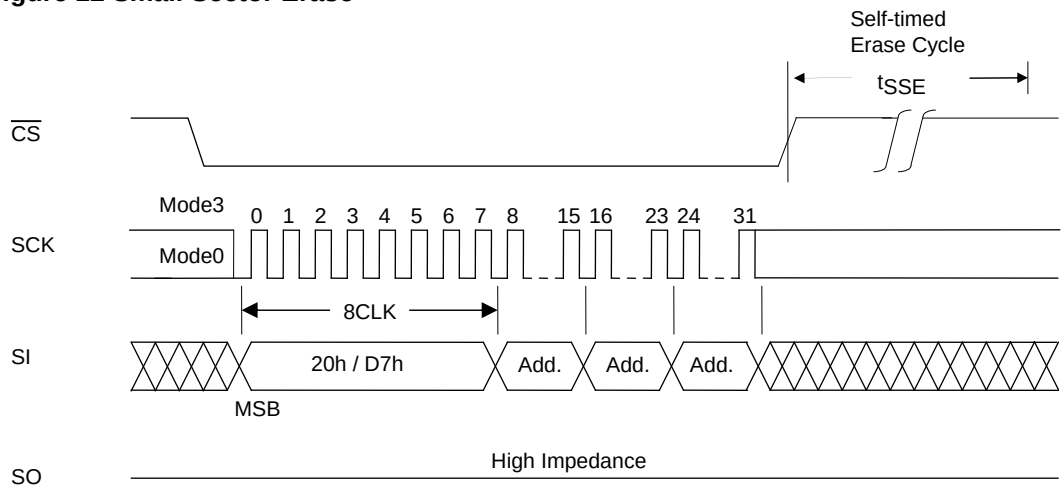


### 8. Sector Erase

Sector erase is an operation that sets the memory cell data in any sector to "1". A sector consists of 64K bytes. "Figure 13 Sector Erase" shows the timing waveforms, and Figure 21 shows a sector erase flowchart. The sector erase command consists of the first through fourth bus cycles, and it is initiated by inputting the 24-bit addresses following (D8h). Addresses A18 to A16 are valid, and Addresses A23 to A19 are "don't care". After the command has been input, the internal erase operation starts from the rising $\overline{CS}$ edge, and it ends automatically by the control exercised by the internal timer. Erase end can also be detected using status register $\overline{RDY}$.

**Figure 13 Sector Erase**

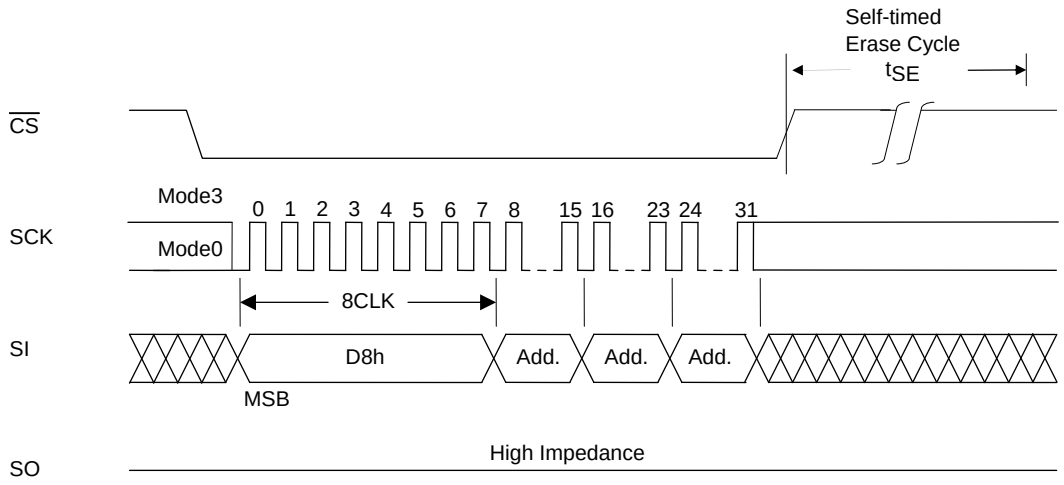

### 9. Chip Erase

Chip erase is an operation that sets the memory cell data in all the sectors to "1". "Figure 14 Chip Erase" shows the timing waveforms, and Figure 21 shows a chip erase flowchart. The chip erase command consists only of the first bus cycle, and it is initiated by inputting (60h) or (C7h). After the command has been input, the internal erase operation starts from the rising $\overline{CS}$ edge, and it ends automatically by the control exercised by the internal timer. Erase end can also be detected using status register $\overline{RDY}$.

**Figure 14 Chip Erase**

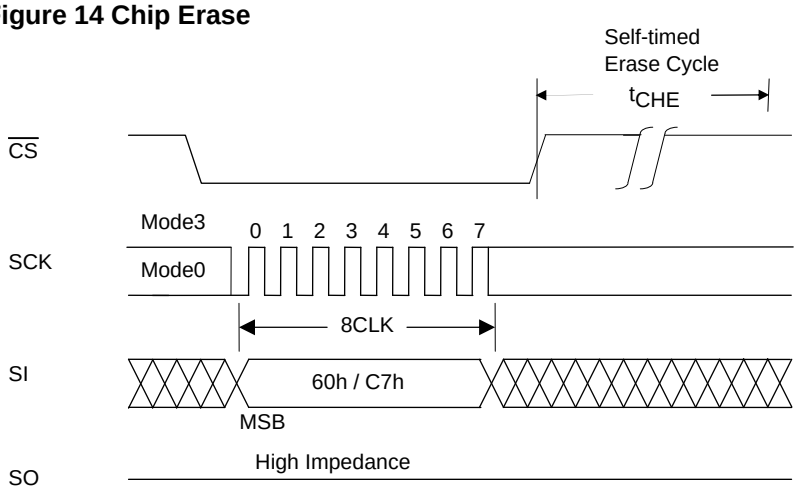


### 10. Page Program

Page program is an operation that programs any number of bytes from 1 to 256 bytes within the same sector page (page addresses: A18 to A8). Before initiating page program, the data on the page concerned must be erased using small sector erase, sector erase, or chip erase. "Figure 15 Page Program" shows the page program timing waveforms, and Figure 22 shows a page program flowchart. After the falling $\overline{CS}$, edge, the command (02H) is input followed by the 24-bit addresses. Addresses A18 to A0 are valid. The program data is then loaded at each rising clock edge until the rising $\overline{CS}$ edge, and data loading is continued until the rising $\overline{CS}$ edge. If the data loaded has exceeded 256 bytes, the 256 bytes loaded last are programmed. The program data must be loaded in 1-byte increments, and the program operation is not performed at the rising $\overline{CS}$ edge occurring at any other timing.

**Figure 15 Page Program**

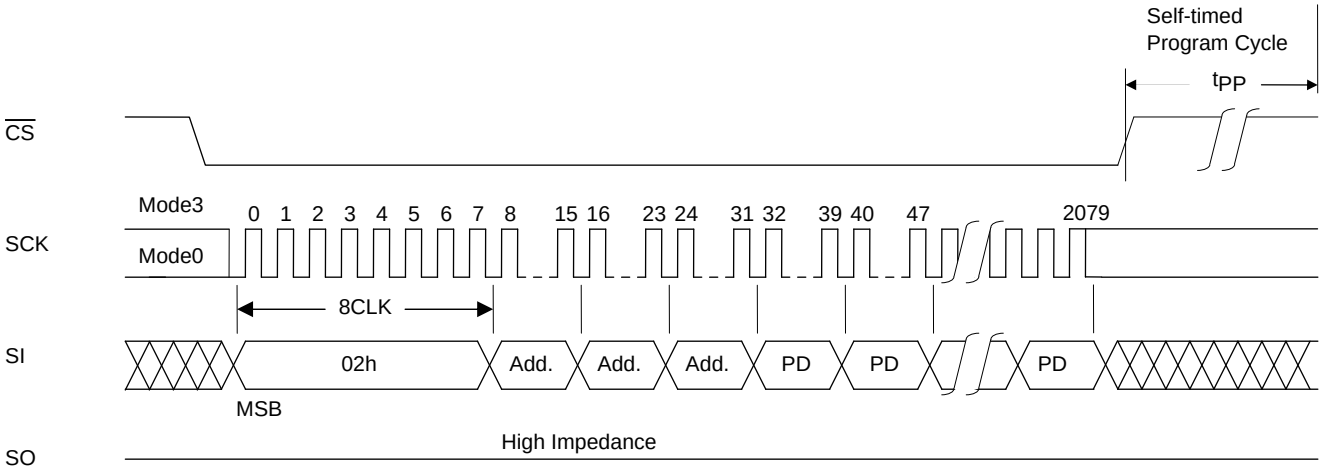

## 11. Silicon ID Read

ID read is an operation that reads the manufacturer code and device ID information. The silicon ID read command is not accepted during writing. There are two methods of reading the silicon ID, each of which is assigned a device ID. In the first method, the read command sequence consists only of the first bus cycle in which (9Fh) is input. In the subsequent bus cycles, the manufacturer code 62h which is assigned by JEDEC, 2-byte device ID code (memory type, memory capacity), and reserved code are output sequentially. The 4-byte code is output repeatedly as long as clock inputs are present, "Table 7-1 JEDEC ID code " lists the silicon ID codes and "Figure 16-a JEDEC ID read" shows the JEDEC ID read timing waveforms.

The second method involves inputting the ID read command. This command consists of the first through fourth bus cycles, and the one bite silicon ID can be read when 24 dummy bits are input after (ABh). "Table 7-2 ID code " lists the silicon ID codes and "Figure 16-b ID read" shows the ID read timing waveforms.

If the SCK input persists after a device code is read, that device code continues to be output. The data output is transmitted starting at the falling edge of the clock for bit 0 in the fourth bus cycle and the silicon ID read sequence is finished by setting $\overline{CS}$ high.

**Table 7-1 JEDEC ID code**

| | | Output code |
|---|---|---|
| Manufacturer code | | 62h |
| 2 byte device ID | Memory type | 06h |
| | Memory capacity code | 13h(4M Bit) |
| Device code | 1 | 00h |

**Table 7-2 ID code**

| | Output Code |
|---|---|
| 1 byte device ID | 6E<br>(LE25U40C) |

**Figure 16-a JEDEC ID Read**

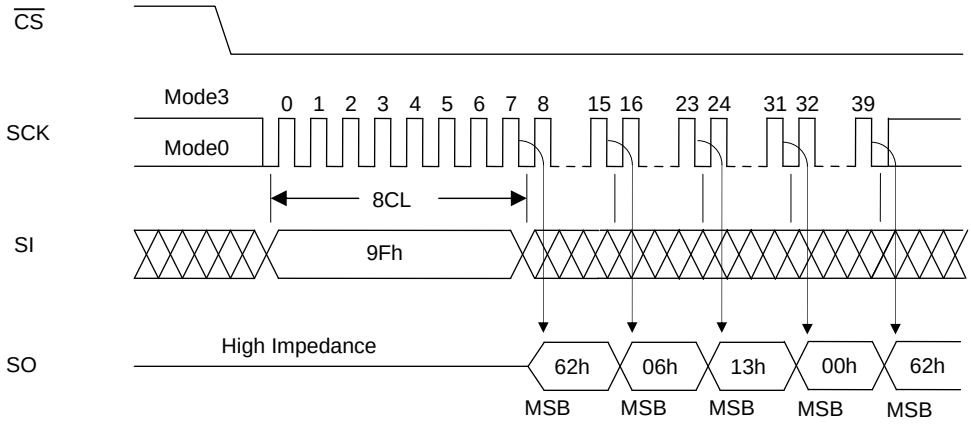


**Figure 16-b ID Read**

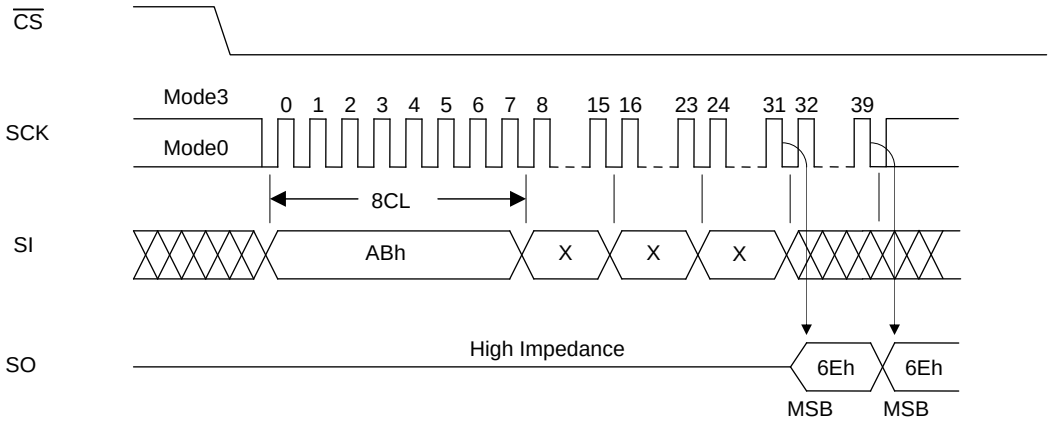

## 12. Hold Function

Using the $\overline{\text{HOLD}}$ pin, the hold function suspends serial communication (it places it in the hold status). "Figure17 $\overline{\text{HOLD}}$" shows the timing waveforms. The device is placed in the hold status at the falling $\overline{\text{HOLD}}$ edge while the logic level of SCK is low, and it exits from the hold status at the rising $\overline{\text{HOLD}}$ edge. When the logic level of SCK is high, $\overline{\text{HOLD}}$ must not rise or fall. The hold function takes effect when the logic level of $\overline{\text{CS}}$ is low, the hold status is exited and serial communication is reset at the rising $\overline{\text{CS}}$ edge. In the hold status, the SO output is in the high-impedance state, and SI and SCK are "don't care".

**Figure 17 $\overline{\text{HOLD}}$**

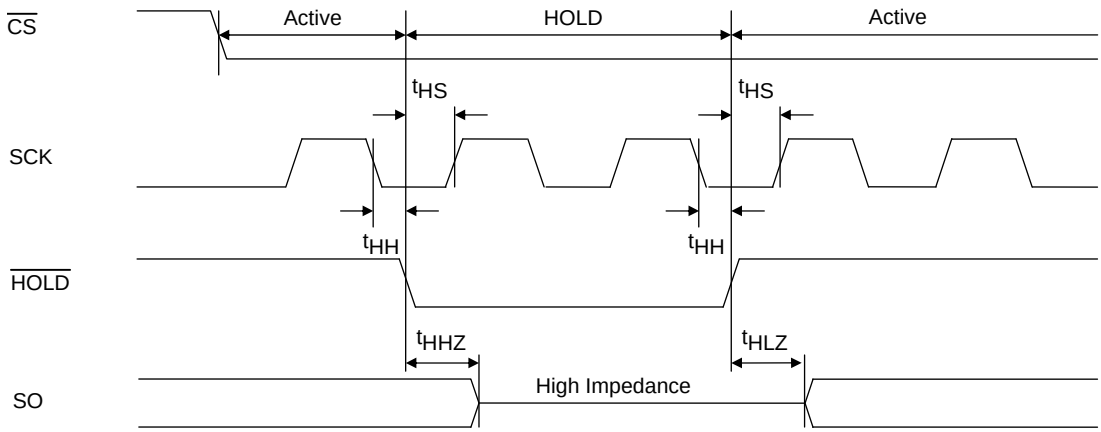


## 13. Power-on

In order to protect against unintentional writing, $\overline{\text{CS}}$ must be within at $V_{DD}$-0.3 to $V_{DD}$+0.3 on power-on. After power-on, the supply voltage has stabilized at VDD min. or higher, waits for $t_{PU}$ before inputting the command to start a device operation. The device is in the standby state and not in the power-down state after power is turned on. To put the device into the power-down state, it is necessary to enter a power-down command.

**Figure 18 Power-on Timing**

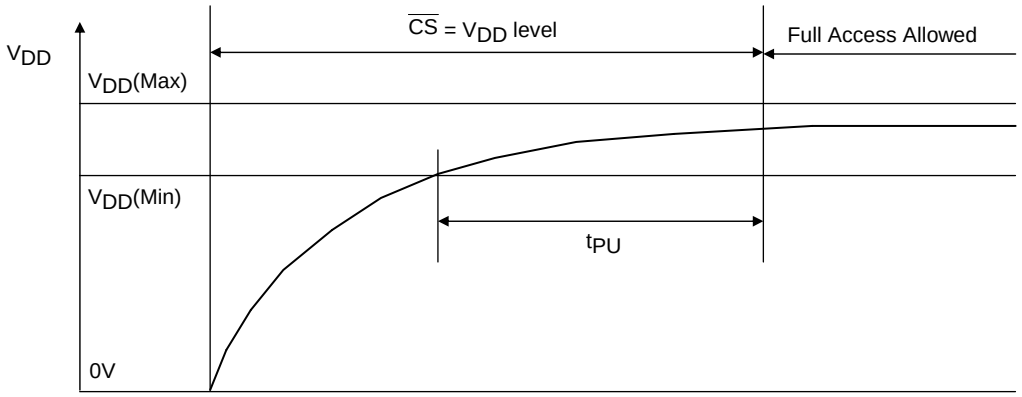

## 14. Hardware Data Protection

LE25U40CQE incorporates a power-on reset function. The following conditions must be met in order to ensure that the power reset circuit will operate stably.

No guarantees are given for data in the event of an instantaneous power failure occurring during the writing period.

**Figure 19 Power-down Timing**

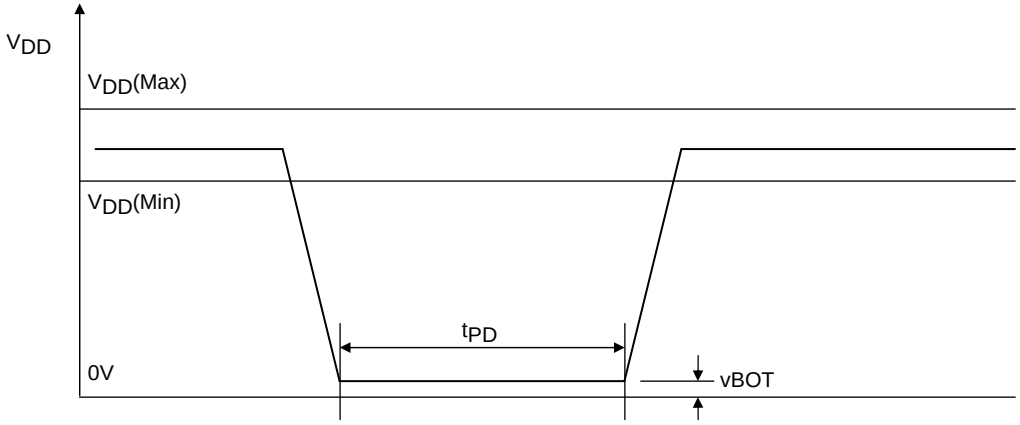


**Power-on timing**

| Parameter | Symbol | spec | | unit |
|---|---|---|---|---|
| | | min | max | |
| power-on to operation time | $t_{PU}$ | 100 | | µs |
| power-down time | $t_{PD}$ | 10 | | ms |
| power-down voltage | $t_{BOT}$ | | 0.2 | V |

## 14. Software Data Protection

The LE25U40CQE eliminates the possibility of unintentional operations by not recognizing commands under the following conditions.

- When a write command is input and the rising $\overline{CS}$ edge timing is not in a bus cycle (8 CLK units of SCK)
- When the page program data is not in 1-byte increments
- When the status register write command is input for 2 bus cycles or more

## 15. Decoupling Capacitor

A 0.1 µF ceramic capacitor must be provided to each device and connected between $V_{DD}$ and $V_{SS}$ in order to ensure that the device will operate stably.

# Specifications

## Absolute Maximum Ratings

| Parameter | Symbol | Conditions | Ratings | unit |
|---|---|---|---|---|
| Maximum supply voltage | $V_{DD}$ max | With respect to $V_{SS}$ | −0.5 to +4.6 | V |
| DC voltage (all pins) | VIN/VOUT | With respect to $V_{SS}$ | −0.5 to $V_{DD}$+0.5 | V |
| Storage temperature | Tstg | | −55 to +150 | °C |

Stresses exceeding those listed in the Maximum Ratings table may damage the device. If any of these limits are exceeded, device functionality should not be assumed, damage may occur and reliability may be affected.

## Operating Conditions

| Parameter | Symbol | Conditions | Ratings | unit |
|---|---|---|---|---|
| Operating supply voltage | $V_{DD}$ | | 2.3 to 3.6 | V |
| Operating ambient temperature | Topr | | −40 to +85 | °C |

## Allowable DC Operating Conditions

| Parameter | Symbol | Conditions | | | Ratings min | Ratings typ | Ratings max | unit |
|---|---|---|---|---|---|---|---|---|
| Read mode operating current | $I_{CCR}$ | SCK = 0.1$V_{DD}$ / 0.9$V_{DD}$, $\overline{HOLD}$ = $\overline{WP}$ = 0.9$V_{DD}$, Output = open | Single | 25 MHz | | | 6 | mA |
| | | | | 40 MHz | | | 10 | mA |
| | | | Dual | 40 MHz | | | 12 | mA |
| Write mode operating current (erase+page program) | $I_{CCW}$ | $t_{SSE}$ = $t_{SE}$ = $t_{CHE}$ = typ., $t_{PP}$ = max | | | | | 15 | mA |
| CMOS standby current | $I_{SB}$ | $\overline{CS}$ = $V_{DD}$, $\overline{HOLD}$ = $\overline{WP}$ = $V_{DD}$, SI = $V_{SS}$ / $V_{DD}$, SO = open | | | | | 50 | μA |
| Power-down standby current | $I_{DSB}$ | $\overline{CS}$ = $V_{DD}$, $\overline{HOLD}$ = $\overline{WP}$ = $V_{DD}$, SI = $V_{SS}$ / $V_{DD}$, SO = open | | | | | 10 | μA |
| Input leakage current | $I_{LI}$ | | | | | | 2 | μA |
| Output leakage current | $I_{LO}$ | | | | | | 2 | μA |
| Input low voltage | $V_{IL}$ | | | | −0.3 | | 0.3$V_{DD}$ | V |
| Input high voltage | $V_{IH}$ | | | | 0.7$V_{DD}$ | | $V_{DD}$+0.3 | V |
| Output low voltage | $V_{OL}$ | $I_{OL}$ = 100 μA, $V_{DD}$ = $V_{DD}$ min | | | | | 0.2 | V |
| | | $I_{OL}$ = 1.6 mA, $V_{DD}$ = $V_{DD}$ min | | | | | 0.4 | |
| Output high voltage | $V_{OH}$ | $I_{OH}$ = −100 μA, $V_{DD}$ = $V_{DD}$ min | | | $V_{DD}$−0.2 | | | V |

Functional operation above the stresses listed in the Recommended Operating Ranges is not implied. Extended exposure to stresses beyond the Recommended Operating Ranges limits may affect device reliability.

## Data hold, Rewriting frequency

| Parameter | condition | min | max | unit |
|---|---|---|---|---|
| Rewriting frequency | Program/Erase | 100,000 | | times/Sector |
| | Status resister write | 1,000 | | times |
| Data hold | | 20 | | year |

## Pin Capacitance at Ta = 25°C, f = 1 MHz

| Parameter | Symbol | Conditions | Ratings max | unit |
|---|---|---|---|---|
| Output pin capacitance | $C_{SO}$ | $V_{SO}$=0V | 12 | pF |
| Input pin Capacitance | $C_{IN}$ | $V_{IN}$=0V | 6 | pF |

Note : These parameter values do not represent the results of measurements undertaken for all devices but rather values for some of the sampled devices.

## AC Characteristics

| Parameter | | Symbol | Ratings | | | unit |
|---|---|---|---|---|---|---|
| | | | min | typ | max | |
| Clock frequency | Read instruction (03h) | $f_{CLK}$ | | | 25 | MHz |
| | All instructions except for read (03h) | | | | 40 | MHz |
| Input signal rising/falling time | | $t_{RF}$ | 0.1 | | | V/ns |
| SCK logic high level pulse width | 25 MHz | $t_{CLHI}$ | 16 | | | ns |
| | 40 MHz | | 11.5 | | | ns |
| SCK logic low level pulse width | 25 MHz | $t_{CLLO}$ | 16 | | | ns |
| | 40 MHz | | 11.5 | | | ns |
| $\overline{CS}$ setup time | | $t_{CSS}$ | **8** | | | ns |
| $\overline{CS}$ hold time | | $t_{CSH}$ | **8** | | | ns |
| Data setup time | | $t_{DS}$ | **2** | | | ns |
| Data hold time | | $t_{DH}$ | 5 | | | ns |
| $\overline{CS}$ wait pulse width | | $t_{CPH}$ | 25 | | | ns |
| Output high impedance time from $\overline{CS}$ | | $t_{CHZ}$ | | | 8 | ns |
| Output data time from SCK | | $t_V$ | | 8 | 11 | ns |
| Output data hold time | | $t_{HO}$ | 1 | | | ns |
| Output low impedance time from SCK | | $t_{CLZ}$ | 0 | | | ns |
| $\overline{HOLD}$ setup time | | $t_{HS}$ | **5** | | | ns |
| $\overline{HOLD}$ hold time | | $t_{HH}$ | 3 | | | ns |
| Output low impedance time from $\overline{HOLD}$ | | $t_{HLZ}$ | | | 9 | ns |
| Output high impedance time from $\overline{HOLD}$ | | $t_{HHZ}$ | | | 9 | ns |
| $\overline{WP}$ setup time | | $t_{WPS}$ | 20 | | | ns |
| $\overline{WP}$ hold time | | $t_{WPH}$ | 20 | | | ns |
| Power-down time | | $t_{DP}$ | | | 3 | μs |
| Power-down recovery time | | $t_{PDR}$ | | | 3 | μs |
| Write status register time | | $t_{SRW}$ | | 5 | 15 | ms |
| Page programming cycle time | | $t_{PP}$ | | 4 | 5 | ms |
| Small sector erase cycle time | | $t_{SSE}$ | | 40 | 150 | ms |
| Sector erase cycle time | | $t_{SE}$ | | 80 | 250 | ms |
| Chip erase cycle time | | $t_{CHE}$ | | 0.25 | 2.0 | s |

Product parametric performance is indicated in the Electrical Characteristics for the listed test conditions, unless otherwise noted. Product performance may not be indicated by the Electrical Characteristics if operated under different conditions.

## AC Test Condtions

Input pulse level····· $0.2V_{DD}$ to $0.8V_{DD}$
Input rising/falling time ····· 5 ns
Input timing level ····· $0.3V_{DD}$, $0.7V_{DD}$
Output timing level ····· $1/2 \times V_{DD}$
Output load ····· 30 pF

Note : As the test conditions for "typ", the measurements are conducted using 2.5 V for $V_{DD}$ at room temperature.

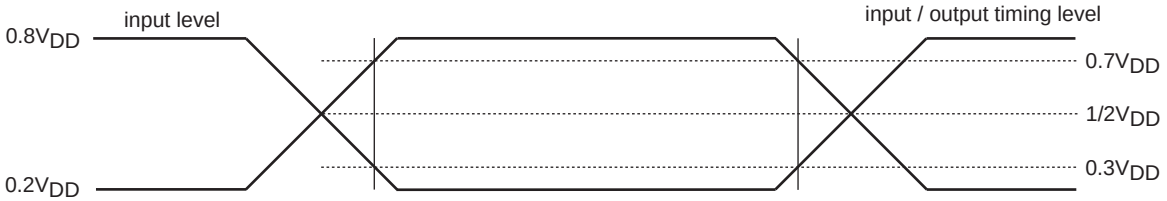

## Timing waveforms

### Serial Input Timing

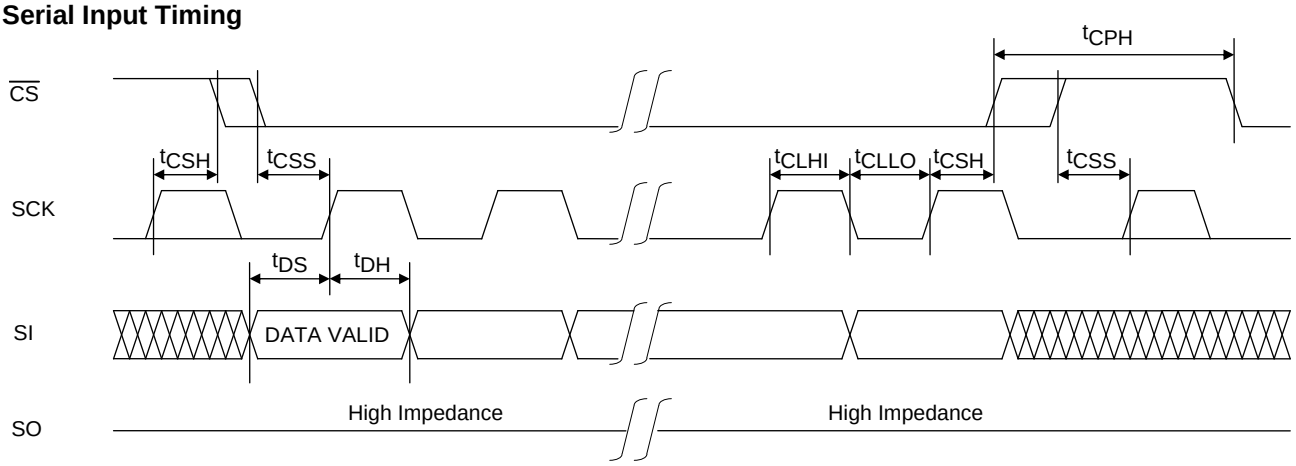


### Serial Output Timing

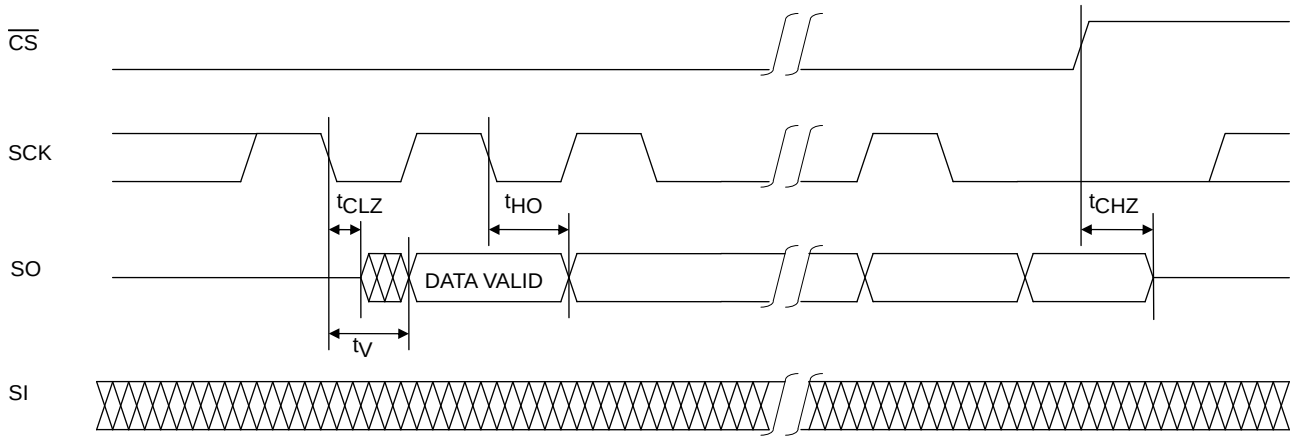


### Hold Timing

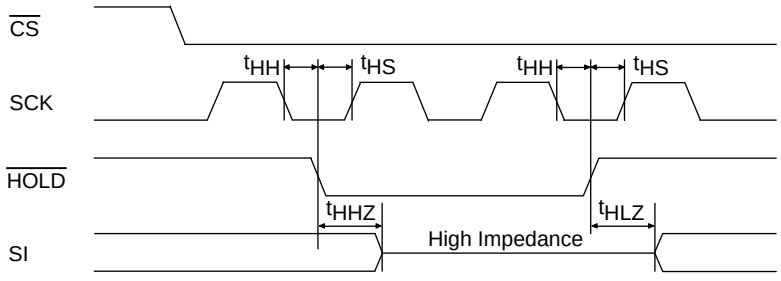


### Status resistor write Timing

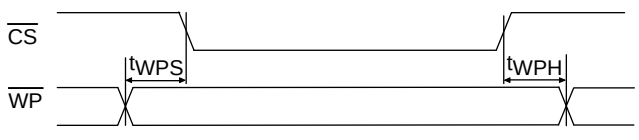

**Figure 20 Status Register Write Flowchart**

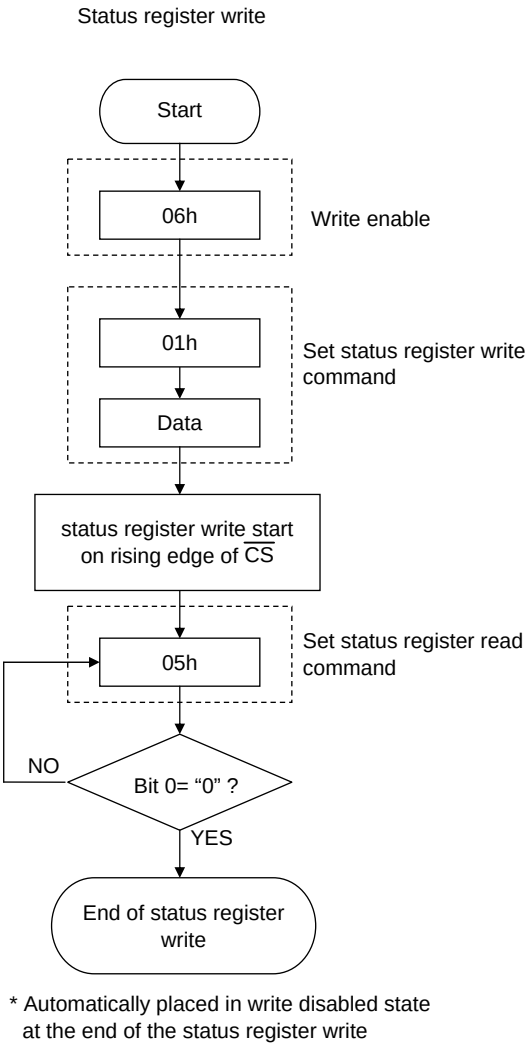

**Figure 21 Erase Flowcharts**

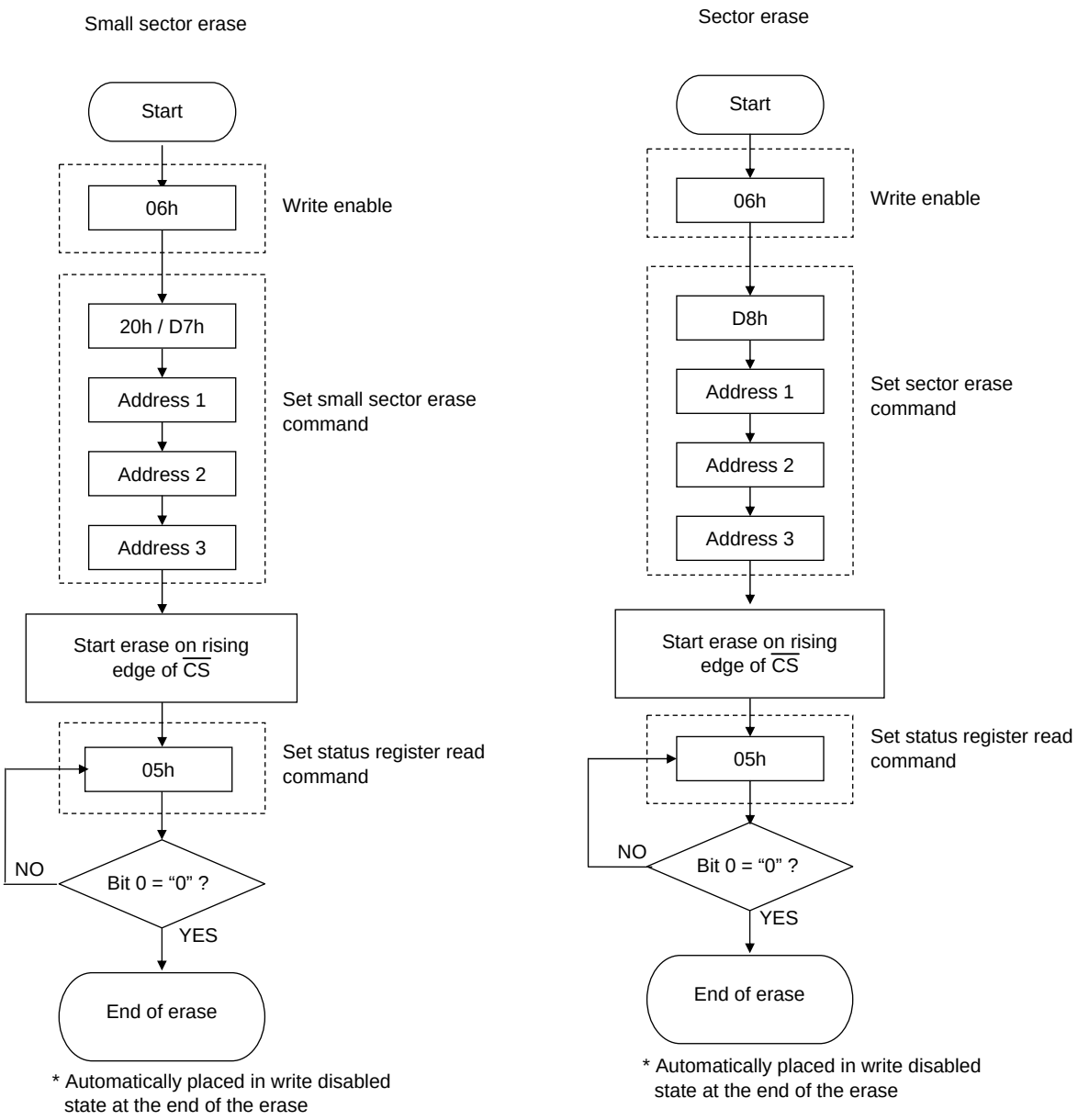

**Figure 22 Page Program Flowchart**

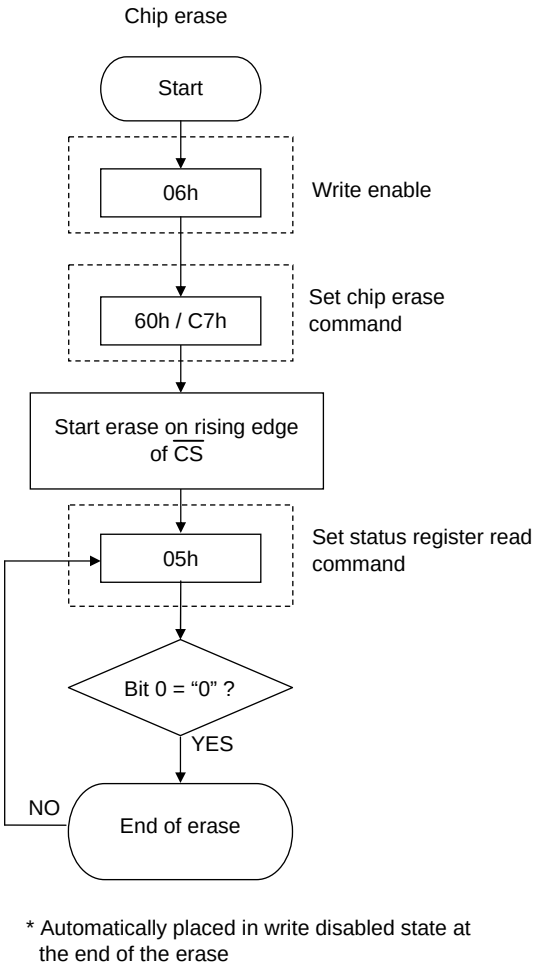


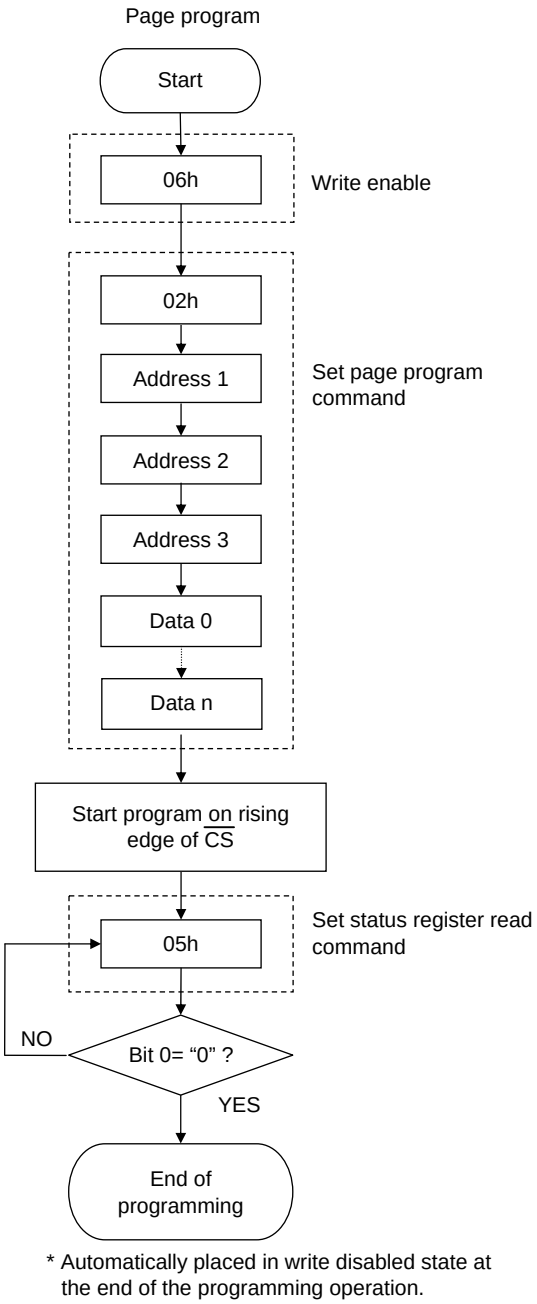

## ORDERING INFORMATION

| Device | Package | Shipping (Qty / Packing) |
|---|---|---|
| LE25U40CQE-AH | VDFN8 5x6, 1.27P / VSON8T (6x5)<br>(Pb-Free / Halogen Free) | 2000 / Tape & Reel |

† For information on tape and reel specifications, including part orientation and tape sizes, please refer to our Tape and Reel Packaging Specifications Brochure, BRD8011/D. http://www.onsemi.com/pub_link/Collateral/BRD8011-D.PDF

ON Semiconductor and the ON Semiconductor logo are trademarks of Semiconductor Components Industries, LLC dba ON Semiconductor or its subsidiaries in the United States and/or other countries. ON Semiconductor owns the rights to a number of patents, trademarks, copyrights, trade secrets, and other intellectual property. A listing of ON Semiconductor's product/patent coverage may be accessed at www.onsemi.com/site/pdf/Patent-Marking.pdf. ON Semiconductor reserves the right to make changes without further notice to any products herein. ON Semiconductor makes no warranty, representation or guarantee regarding the suitability of its products for any particular purpose, nor does ON Semiconductor assume any liability arising out of the application or use of any product or circuit, and specifically disclaims any and all liability, including without limitation special, consequential or incidental damages. Buyer is responsible for its products and applications using ON Semiconductor products, including compliance with all laws, regulations and safety requirements or standards, regardless of any support or applications information provided by ON Semiconductor. "Typical" parameters which may be provided in ON Semiconductor data sheets and/or specifications can and do vary in different applications and actual performance may vary over time. All operating parameters, including "Typicals" must be validated for each customer application by customer's technical experts. ON Semiconductor does not convey any license under its patent rights nor the rights of others. ON Semiconductor products are not designed, intended, or authorized for use as a critical component in life support systems or any FDA Class 3 medical devices or medical devices with a same or similar classification in a foreign jurisdiction or any devices intended for implantation in the human body. Should Buyer purchase or use ON Semiconductor products for any such unintended or unauthorized application, Buyer shall indemnify and hold ON Semiconductor and its officers, employees, subsidiaries, affiliates, and distributors harmless against all claims, costs, damages, and expenses, and reasonable attorney fees arising out of, directly or indirectly, any claim of personal injury or death associated with such unintended or unauthorized use, even if such claim alleges that ON Semiconductor was negligent regarding the design or manufacture of the part. ON Semiconductor is an Equal Opportunity/Affirmative Action Employer. This literature is subject to all applicable copyright laws and is not for resale in any manner.