LE0504FT1G

STEERING DIODE/TVS ARRAY COMBO

MECHANICAL CHARACTERISTICS

- Molded JEDEC SC-88
- Weight 16 milligrams (Approximate)

LE0504FT1G

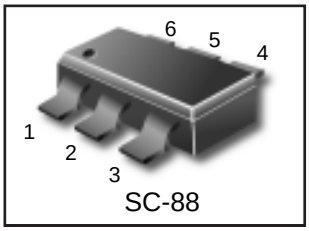

Features

- 300 Watts Peak Pulse Power per Line (tp=8/20μs)
- Low Clamping Voltage
- PROTECTS FOUR (4) LINES
- ULTRA LOW CAPACITANCE :3.5 Pf Typical
- RoHS Complianton Lead Free Versions

APPLICATIONS

- Ethernet – 10/100/1000 Base T
- Cellular Phones
- Handheld & Portable Electronics
- Video/Graphics Card
- USB 2.0 Interface
- DVI Interface
- We declare that the material of product compliance with RoHS reūirements.

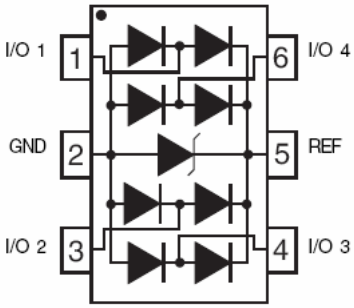

IEC COMPATIBILITY(EN61000-4)

- 61000-4-2 (ESD): Air – 15kV,Contact – 8kV
- 61000-4-4 (ESD): 40A – 5/50ns
- 61000-4-5 (Surge): 24A,8/20μs-Level 2 (Line-Gnd) & Level 3 (Line –Line)

ORDERING INFORMATION

Device	Package	Shipping
LE0504FT1G	SC-88	3000/Tape & Reel

DEVICE CHARACTERISTICS

MAXIMUM RATINGS @ 25℃ Unless Otherwise Specified

PARAMETER	SYMBOL	VALUE	UNITS
Peak Pulse Power (tp=8/20μs)See Figure 1	P_{PP}	300	Watts
Operating Temperature	T_J	-55℃ to 150℃	℃
Storage Temperature	T_{STG}	-55℃ to 150℃	℃
Forward Surge Rating (1/20 seconds @ 25℃, I_F=10mA)	V_F	1.5	Volts
Peak Pulse Current (tp= 8/20μs)	I_{PP}	12	Amps

LE0504FT1G

ELECTRICAL CHARACTERISTICS PER LINE @ 25℃ Unless Otherwise Specified

PART NUMBER	RATED STANDOFF VOLTAGE (See Note1) V_{WM} VOLTS	MINIMUM BREAKDOWN VOLTAGE (See Note1) @1mA $V_{(BR)}$ VOLTS	MAXIMUM CLAMPING VOLTAGE (See Fig.2) (See Note 1) @I_P=1A V_C VOLTS	MAXIMUM CLAMPING VOLTAGE (See Note1) @I_P=5A V_C VOLTS	MAXIMUM LEAKAGE CURRENT (See Note1) @ V_{WM} I_D μ A	TYPICAL CAPACITANCE (See Note1) @0V,1MHz $C_{J(SD)}$ pF
LE0504FT1G	5.0	6.0	12.0	15.0	5	3.5

Note 1: From I/O Pin to Ground.

FIGURE 1

PEAK PULSE POWER VS PULSE TIME

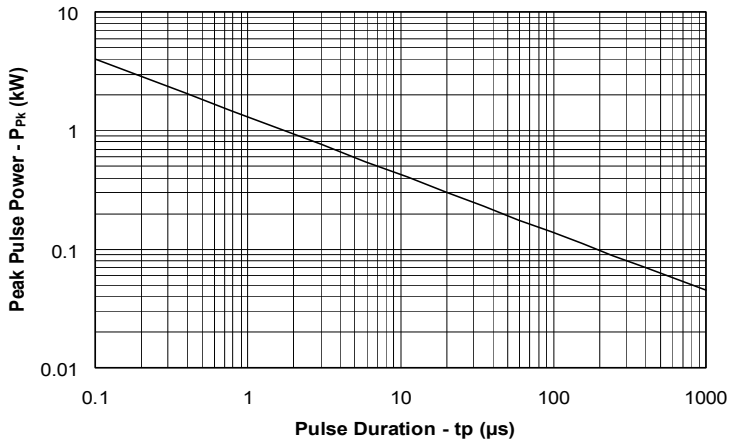

FIGURE 2

PULSE WAVE FORM

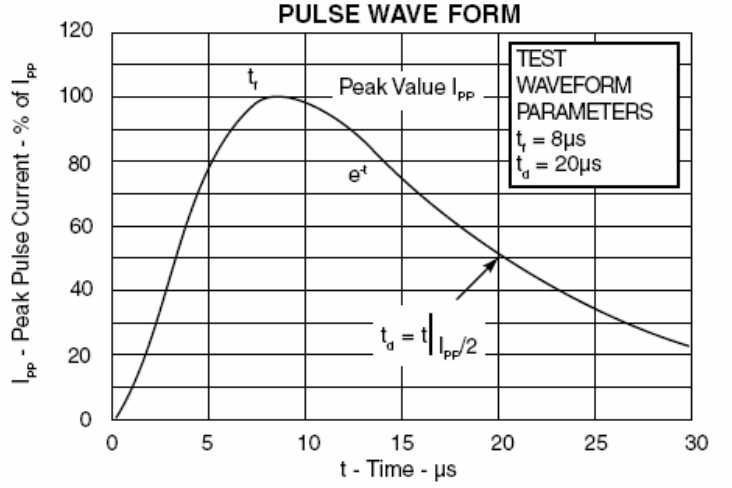

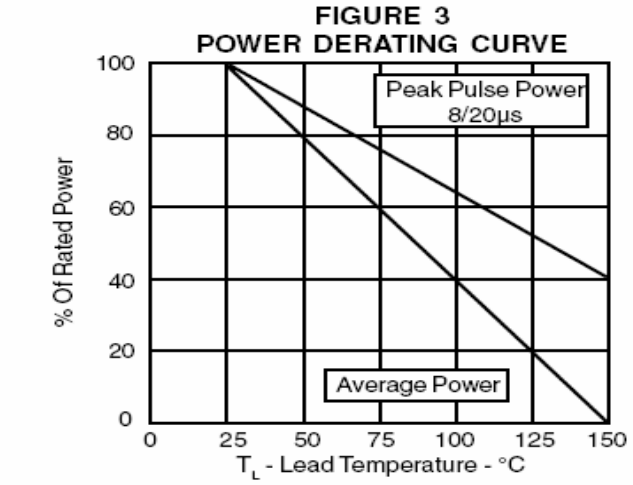

FIGURE 4

OVERSHOOT & CLAMPING VOLTAGE FOR LGRV05-4LT1G

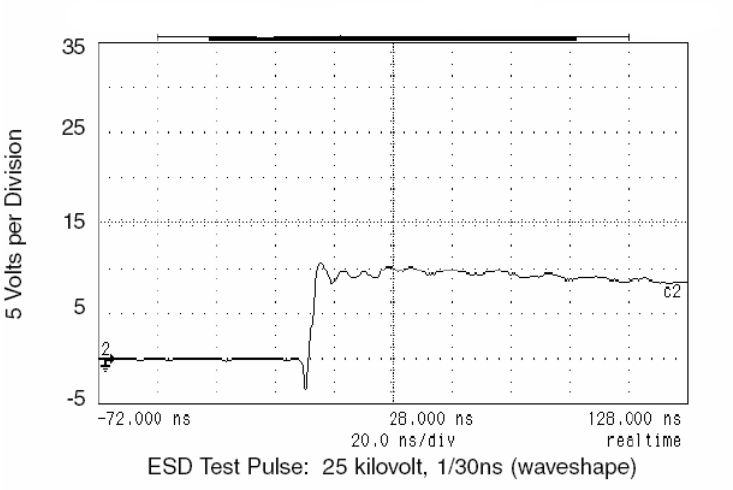

LE0504FT1G

SC−88 (SOT−363)
CASE 419B−02
ISSUE T

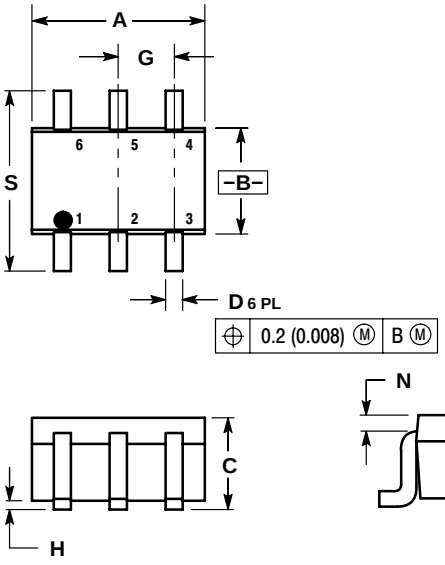

NOTES:
1. DIMENSIONING AND TOLERANCING PER ANSI Y14.5M, 1982.
2. CONTROLLING DIMENSION: INCH.
3. 419B−01 OBSOLETE, NEW STANDARD 419B−02.

	INCHES		MILLIMETERS	
DIM	MIN	MAX	MIN	MAX
A	0.071	0.087	1.80	2.20
B	0.045	0.053	1.15	1.35
C	0.031	0.043	0.80	1.10
D	0.004	0.012	0.10	0.30
G	0.026 BSC		0.65 BSC	
H	−−−	0.004	−−−	0.10
J	0.004	0.010	0.10	0.25
K	0.004	0.012	0.10	0.30
N	0.008 REF		0.20 REF	
S	0.079	0.087	2.00	2.20

STYLE 1:
PIN 1. EMITTER 2
2. BASE 2
3. COLLECTOR 1
4. EMITTER 1
5. BASE 1
6. COLLECTOR 2

SOLDERING FOOTPRINT*

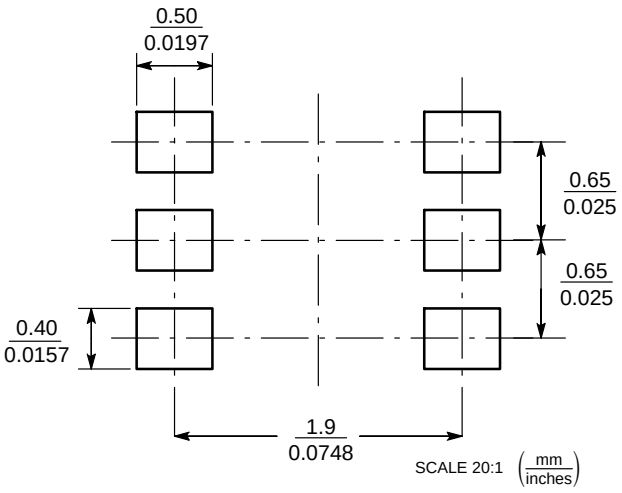

EMBOSSED TAPE AND REEL DATA FOR DISCRETES

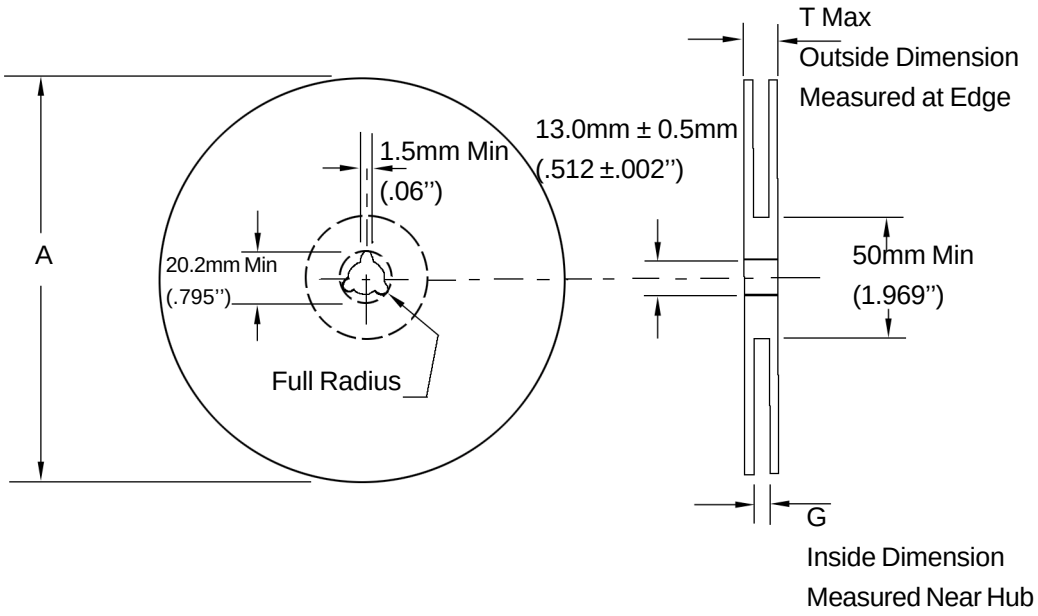

Size	A Max	G	T Max
8 mm	178.0mm (7.0")	8.4mm+1.5mm, -0.0 (.33"+.039", -0.00)	10.9mm (.43")

Reel Dimensions

Metric Dimensions Govern — English are in parentheses for reference only

Storage Conditions

Temperature: 5 to 40 Deg.C (20 to 30 Deg. C is preferred)
Humidity: 30 to 80 RH (40 to 60 is preferred)
Recommended Period: One year after manufacturing
(This recommended period is for the soldering condition only. The characteristics and reliabilities of the products are not restricted to this limitation)

Shipment Specification

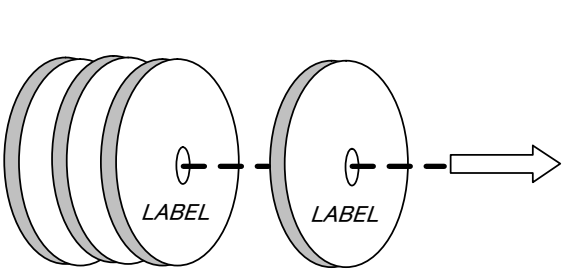

10 Reel

3000PCS/Reel
4000PCS/Reel (SOT-723,SOD-723,SOD-923)
8000PCS/Reel (SOT-723,SOD-723,SOD-923)

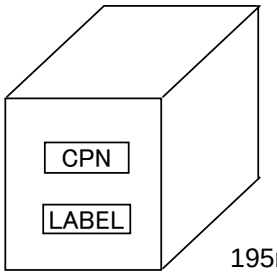

Dim(Unit:mm)

195mm*195mm*150mm

10Reel/Inner Box

30KPCS/Inner Box
40KPCS/Inner Box (SOT-723,SOD-723,SOD-923)
80KPCS/Inner Box (SOT-723,SOD-723,SOD-923)

Dim(Unit:mm)

460mm*400mm*420mm

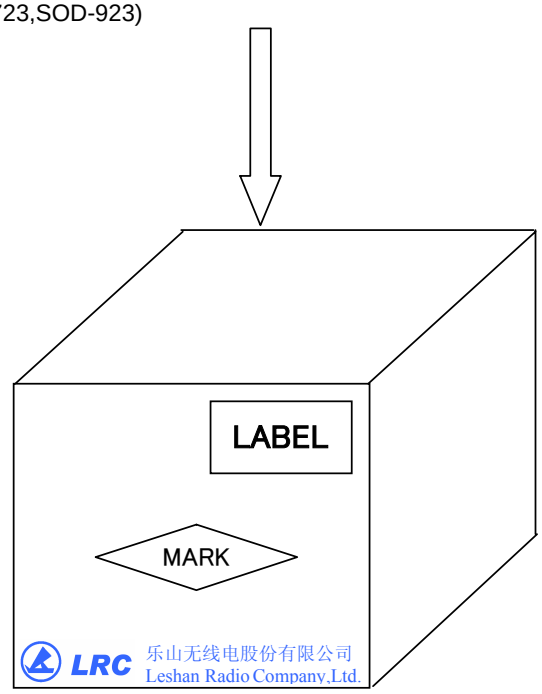

12 Inner Box/Carton

360KPCS/Carton
960KPCS/Carton (SOT-723,SOD-723,SOD-923)