KEMET Part Number: LDEDD3330KA5N00

(DEDD3330KA5N00)

Film, Metallized PEN Stacked, Commercial Grade, LDE, 0.33 uF, 10%, 63 V, 40 V, 125C, 2220, 1.9mm

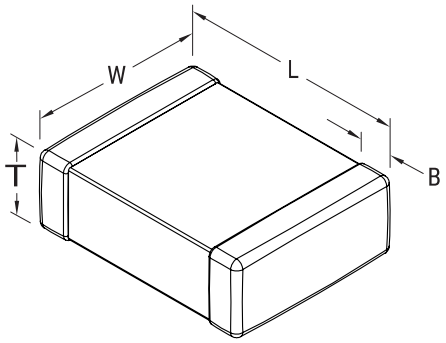

General Information	
Dielectric:	Metallized PEN Stacked
Style:	SMD Chip
Series:	LDE
RoHS:	Yes
Approvals:	AEC-Q200
AEC-Q200:	Yes

Dimensions	
Chip Size	2220
L	6mm +/-0.3mm
W	5mm +/-0.4mm
T	1.9mm MAX
B	0.5mm +0.5/-0.3mm

Specifications	
Capacitance:	0.33 uF
Capacitance Tolerance:	10%
Voltage DC:	63 VDC
Voltage AC:	40 V
Temperature Range:	-55/+125C
Rated Temperature:	125C
Dissipation Factor:	0.8% 1kHz
Insulation Resistance:	1 GOhms
Max dVdt:	100 V

Packaging Specifications	
Packaging:	T&R
Packaging Quantity:	3000

Statements of suitability for certain applications are based on our knowledge of typical operating conditions for such applications, but are not intended to constitute - and we specifically disclaim - any warranty concerning suitability for a specific customer application or use. This Information is intended for use only by customers who have the requisite experience and capability to determine the correct products for their application. Any technical advice inferred from this Information or otherwise provided by us with reference to the use of our products is given gratis, and we assume no obligation or liability for the advice given or results obtained.

© 2006 - 2017 IntelliData.net