# LCD12DT3

UNIDIRECTIONAL / BIDIRECTIONAL LOW CAPACITANCE TVS DIODE ARRAY

## Features

- Ultra low leakage: nA level
- Operating voltage: 12V
- Low clamping voltage
- Complies with following standards:
  – IEC 61000-4-2 (ESD) immunity test
    Air discharge: ±15kV
    Contact discharge: ±8kV
  – IEC61000-4-4 (EFT) 40A (5/50ns)
- RoHS Compliant

## Dimensions SOT-23



## Pin Configuration

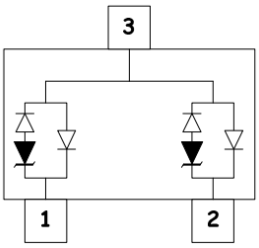


## Applications

- USB 2.0 power and data line
- Set-top box and digital TV
- Digital video interface (DVI)
- Notebook Computers
- SIM Ports
- 10/100 Ethernet

## Mechanical Characteristics

- Package: SOT-23
- Lead Finish: Lead Free
- UL Flammability Classification Rating 94V-0
- Quantity Per Reel:3,000pcs
- Reel Size:7inch

## Absolute Maximum Ratings(Tamb=25°C unless otherwise specified)

| Parameter | Symbol | Value | Unit |
|---|---|---|---|
| Peak Pulse Power (8/20μs) | Ppp | 300 | W |
| ESD per IEC 61000−4−2 (Air) | $V_{ESD}$ | ±15 | Kv |
| ESD per IEC 61000−4−2 (Contact) | | ±8 | |
| Operating Temperature Range | $T_J$ | -55 to +125 | ℃ |
| Storage Temperature Range | $T_{STJ}$ | -55 to +150 | ℃ |

## Electrical Characteristics(TA=25°C unless otherwise specified)

| Part Number | Device Marking | $V_{RWM}$ (V) | $V_{BR}$ (V) | $I_T$ (mA) | $V_C$ @1A | Vc | | $I_R$ μA (Max) | C (Pf) (Typ.) |
|---|---|---|---|---|---|---|---|---|---|
| | | | | | | (Max) | (@A) | | |
| LCD12DT3 | KWA | 12 | 13.3 | 1 | 19 | 36 | 5 | 1 | 1.5 |

## Characteristic Curves

**Fig1. 8/20μs Pulse Waveform**

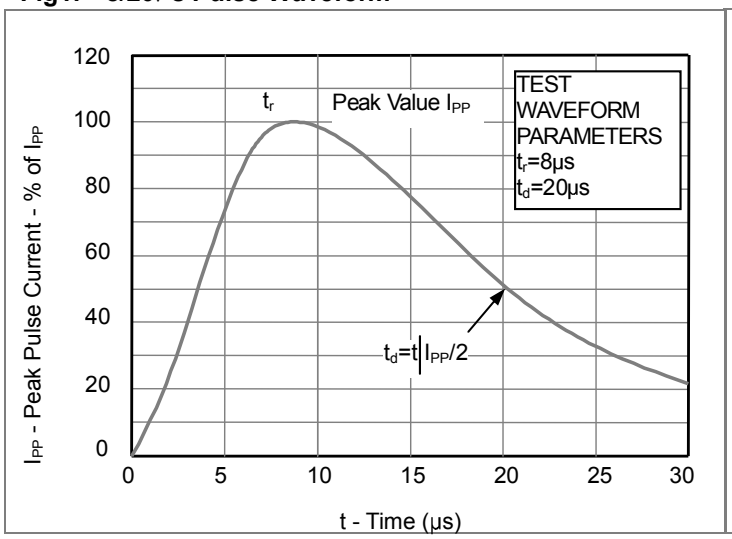


**Fig2. ESD Pulse Waveform (according to IEC 61000-4-2)**

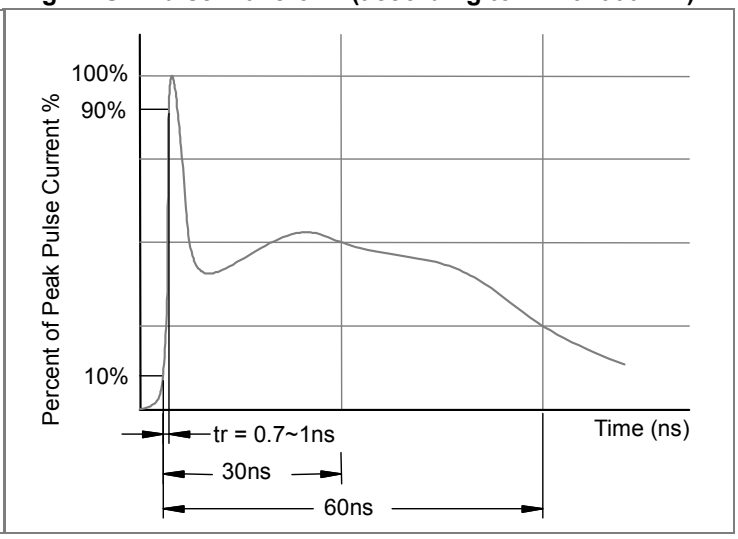


**Fig3. Power Derating Curve**

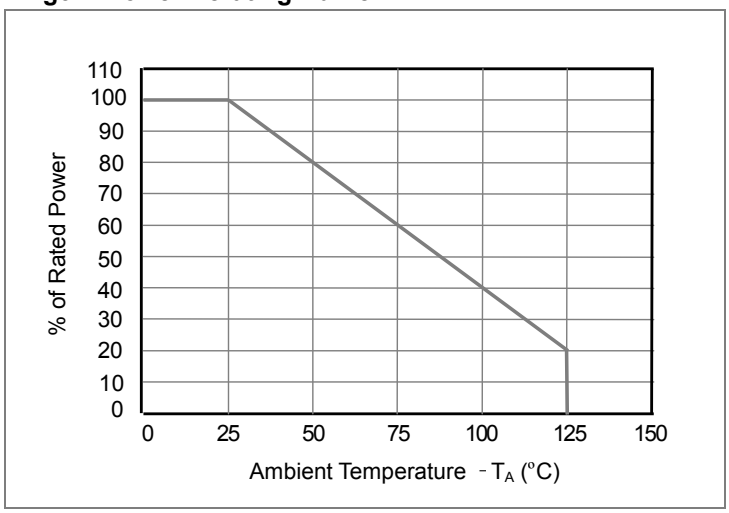

## SOT-23 Package Outline & Dimensions

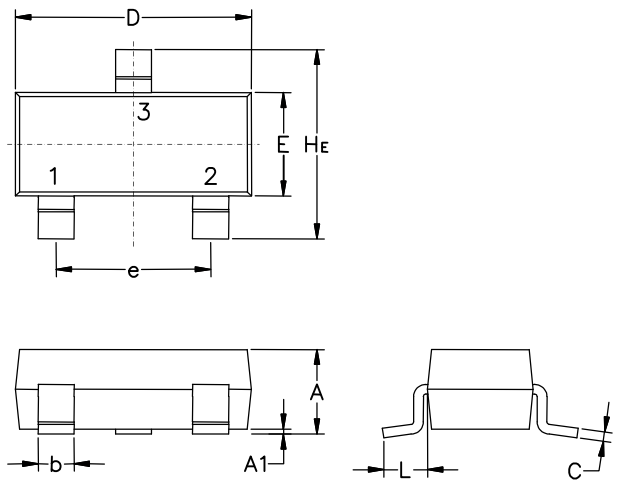


| Symbol | Millimeters | | | Inches | | |
|---|---|---|---|---|---|---|
| | Min. | Nom. | Max. | Min. | Nom. | Max. |
| A | 0.89 | 1.00 | 1.11 | 0.035 | 0.040 | 0.044 |
| A1 | 0.01 | 0.06 | 0.10 | 0.001 | 0.002 | 0.004 |
| b | 0.37 | 0.44 | 0.50 | 0.15 | 0.18 | 0.020 |
| c | 0.09 | 0.13 | 0.18 | 0.003 | 0.005 | 0.007 |
| D | 2.80 | 2.90 | 3.04 | 0.110 | 0.114 | 0.120 |
| E | 1.20 | 1.30 | 1.40 | 0.047 | 0.051 | 0.055 |
| e | 1.78 | 1.90 | 2.04 | 0.070 | 0.075 | 0.081 |
| L | 0.35 | 0.54 | 0.69 | 0.014 | 0.021 | 0.029 |
| $H_E$ | 2.10 | 2.40 | 2.64 | 0.083 | 0.094 | 0.104 |

### Soldering Footprint

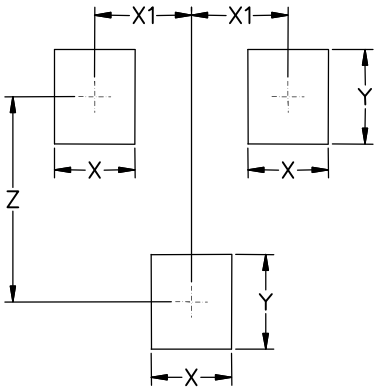


| Symbol | Millimeters | Inches |
|---|---|---|
| X | 0.80 | 0.031 |
| X1 | 0.95 | 0.037 |
| Y | 0.90 | 0.035 |
| Z | 2.00 | 0.079 |

Shanghai Leiditech Electronic Co.,Ltd
Email: sale1@leiditech.com
Tel : +86- 021 50828806
Fax : +86- 021 50477059