Ordering number : ENA1955

LC87FBL08A

CMOS IC
8K-byte FROM and 256-byte RAM integrated
8-bit 1-chip Microcontroller

ON Semiconductor®
http://onsemi.com

Overview

The LC87FBL08A is an 8-bit microcomputer that, centered around a CPU running at a minimum bus cycle time of 83.3ns, integrates on a single chip a number of hardware features such as 8K-byte flash ROM (On-board-programmable), 256-byte RAM, an On-chip-debugger, sophisticated 16-bit timers/counters (may be divided into 8-bit timers), a 16-bit timer/counter (may be divided into 8-bit timers/counters or 8-bit PWMs), two 8-bit timers with a prescaler, a base timer serving as a time-of-day clock, an asynchronous/synchronous SIO interface, two 12-bit PWM channels, a 12-bit/8-bit 11-channel AD converter, a system clock frequency divider, an internal reset and a 17-source 9-vector interrupt feature.

Features

■Flash ROM
- Capable of On-board programming with wide range (2.7 to 5.5V) of voltage source.
- Block-erasable in 128 byte units
- Writable in 2-byte units
- 8192 × 8 bits

■RAM
- 256 × 9 bits

■Minimum Bus Cycle
- 83.3ns (12MHz at V_{DD}=2.7V to 5.5V)
  Note: The bus cycle time here refers to the ROM read speed.

* This product is licensed from Silicon Storage Technology, Inc. (USA).

■Minimum Instruction Cycle Time
- 250ns (12MHz at V_{DD}=2.7V to 5.5V)

■Ports
- Normal withstand voltage I/O ports
  Ports I/O direction can be designated in 1-bit units — 17 (P1n, P20, P21,P30, P31, P70 to P73, CF2/XT2)
  Ports I/O direction can be designated in 4-bit units — 8 (P0n)
- Dedicated oscillator ports/input ports — 1 (CF1/XT1)
- Reset pin — 1 ($\overline{RES}$)
- Power pins — 3 ($V_{SS}1$, $V_{SS}2$, $V_{DD}1$)

■Timers
- Timer 0: 16-bit timer/counter with a capture register.
  Mode 0: 8-bit timer with an 8-bit programmable prescaler (with an 8-bit capture register) × 2 channels
  Mode 1: 8-bit timer with an 8-bit programmable prescaler (with an 8-bit capture register) + 8-bit counter (with an 8-bit capture register)
  Mode 2: 16-bit timer with an 8-bit programmable prescaler (with a 16-bit capture register)
  Mode 3: 16-bit counter (with a 16-bit capture register)
- Timer 1: 16-bit timer/counter that supports PWM/toggle outputs
  Mode 0: 8-bit timer with an 8-bit prescaler (with toggle outputs) + 8-bit timer/counter with an 8-bit prescaler (with toggle outputs)
  Mode 1: 8-bit PWM with an 8-bit prescaler × 2 channels
  Mode 2: 16-bit timer/counter with an 8-bit prescaler (with toggle outputs) (toggle outputs also possible from the lower-order 8 bits)
  Mode 3: 16-bit timer with an 8-bit prescaler (with toggle outputs) (The lower-order 8 bits can be used as PWM)
- Timer 6: 8-bit timer with a 6-bit prescaler (with toggle outputs)
- Timer 7: 8-bit timer with a 6-bit prescaler (with toggle outputs)
- Base timer
  1) The clock is selectable from the subclock (32.768kHz crystal oscillation), system clock, and timer 0 prescaler output.
  2) Interrupts are programmable in 5 different time schemes

■SIO
- SIO1: 8-bit asynchronous/synchronous serial interface
  Mode 0: Synchronous 8-bit serial I/O (2- or 3-wire configuration, 2 to 512 tCYC transfer clocks)
  Mode 1: Asynchronous serial I/O (half-duplex, 8 data bits, 1 stop bit, 8 to 2048 tCYC baudrates)
  Mode 2: Bus mode 1 (start bit, 8 data bits, 2 to 512 tCYC transfer clocks)
  Mode 3: Bus mode 2 (start detect, 8 data bits, stop detect)

■AD Converter: 12 bits/8 bits × 11 channels
- 12 bits/8 bits AD converter resolution selectable

■PWM: Multifrequency 12-bit PWM × 2 channels

■Remote Control Receiver Circuit (sharing pins with P73, INT3, and T0IN)
- Noise rejection function (noise filter time constant selectable from 1 tCYC, 32 tCYC, and 128 tCYC)

■Clock Output Function
- Capable generating clock outputs with a frequency of 1/1, 1/2, 1/4, 1/8, 1/16, 1/32, 1/64 of the source clock selected as the system clock.
- Capable generating the source clock for the subclock

■Watchdog Timer
- Capable generating an internal reset on an overflow of a timer running on the low-speed RC oscillator clock or subclock.
- Operating mode at standby is selectable from 3 modes (continue counting/stop operation/stop counting with a count value held).

■Interrupts

- 17 sources, 9 vector addresses

1) Provides three levels (low (L), high (H), and highest (X)) of multiplex interrupt control. Any interrupt requests of the level equal to or lower than the current interrupt are not accepted.

2) When interrupt requests to two or more vector addresses occur at the same time, the interrupt of the highest level takes precedence over the other interrupts. For interrupts of the same level, the interrupt into the smallest vector address takes precedence.

No.	Vector Address	Level	Interrupt Source
1	00003H	X or L	INT0
2	0000BH	X or L	INT1
3	00013H	H or L	INT2/T0L/INT4
4	0001BH	H or L	INT3/INT5/base timer
5	00023H	H or L	T0H
6	0002BH	H or L	T1L/T1H
7	00033H	H or L	None
8	0003BH	H or L	SIO1
9	00043H	H or L	ADC/T6/T7/PWM4, PWM5
10	0004BH	H or L	Port 0

- Priority levels X > H > L
- Of interrupts of the same level, the one with the smallest vector address takes precedence.

■Subroutine Stack Levels: 128levels (The stack is allocated in RAM.)

■High-speed Multiplication/Division Instructions

- 16 bits × 8 bits (5 tCYC execution time)
- 24 bits × 16 bits (12 tCYC execution time)
- 16 bits ÷ 8 bits (8 tCYC execution time)
- 24 bits ÷ 16 bits (12 tCYC execution time)

■Oscillation Circuits

- Internal oscillation circuits

  Low-speed RC oscillation circuit : For system clock (100kHz)
  Medium-speed RC oscillation circuit : For system clock (1MHz)
  Frequency variable RC oscillation circuit : For system clock (8MHz)

- External oscillation circuits

  Hi-speed CF oscillation circuit: For system clock, with internal Rf
  Low speed crystal oscillation circuit: For low-speed system clock, with internal Rf

1) The CF and crystal oscillation circuits share the same pins. The active circuit is selected under program control.

2) Both the CF and crystal oscillator circuits stop operation on a system reset. After reset is released, oscillation is stopped so start the oscillation operation by program.

■System Clock Divider Function

- Can run on low current.
- The minimum instruction cycle selectable from 300ns, 600ns, 1.2µs, 2.4µs, 4.8µs, 9.6µs, 19.2µs, 38.4µs, and 76.8µs (at a main clock rate of 10MHz).

■Internal Reset Function

- Power-on reset (POR) function

1) POR reset is generated only at power-on time.

2) The POR release level can be selected from 4 levels (2.57V, 2.87V, 3.86V, and 4.35V) through option configuration.

- Low-voltage detection reset (LVD) function

1) LVD and POR functions are combined to generate resets when power is turned on and when power voltage falls below a certain level.

2) The use or disuse of the LVD function and the low voltage threshold level (3 levels: 2.81V, 3.79V, 4.28V) can be selected by optional configuration.

■Standby Function

- HALT mode: Halts instruction execution while allowing the peripheral circuits to continue operation.
  1) Oscillation is not halted automatically.
  2) There are three ways of resetting the HALT mode.
     (1) Setting the reset pin to the low level
     (2) System resetting by watchdog timer or low-voltage detection
     (3) Occurrence of an interrupt
- HOLD mode: Suspends instruction execution and the operation of the peripheral circuits.
  1) The CF, RC, and crystal oscillators automatically stop operation.
  2) There are four ways of resetting the HOLD mode.
     (1) Setting the reset pin to the lower level.
     (2) System resetting by watchdog timer or low-voltage detection
     (3) Having an interrupt source established at either INT0, INT1, INT2, INT4 or INT5
         * INT0 and INT1 HOLD mode reset is available only when level detection is set.
     (4) Having an interrupt source established at port 0.
- X'tal HOLD mode: Suspends instruction execution and the operation of the peripheral circuits except the base timer.
  1) The RC oscillator automatically stop operation.
  2) The state of crystal oscillation established when the X'tal HOLD mode is entered is retained.
  3) There are five ways of resetting the X'tal HOLD mode.
     (1) Setting the reset pin to the low level.
     (2) System resetting by watchdog timer or low-voltage detection.
     (3) Having an interrupt source established at either INT0, INT1, INT2, INT4 or INT5
         * INT0 and INT1 HOLD mode reset is available only when level detection is set.
     (4) Having an interrupt source established at port 0.
     (5) Having an interrupt source established in the base timer circuit.
     Note: Available only when X'tal oscillation is selected.

■Onchip Debugger

- Supports software debugging with the IC mounted on the target board.
- Software break point setting for debugger.
- Stepwise execution on debugger.
- Real time RAM data monitoring function on debugger.
  All the RAM data map can be monitored on screen when the program is running.
  (The RAM & SFR data can be changed by screen patch when the program is running)
- Two channels of on-chip debugger pins are available to be compatible with small pin count devices.
  DBGP0 (P0), DBGP1 (P1)

■Data Security Function (flash versions only)

- Protects the program data stored in flash memory from unauthorized read or copy.
  Note: This data security function does not necessarily provide absolute data security.

■Package Form

- QFP36(7×7) : Lead-/Halogen-free type
- VQLP32(4×4) : Lead-/Halogen-free type (build-to-order)

■Development Tools

- On-chip-debugger : (1) TCB87 TypeB + LC87FBL08A
  (2) TCB87 TypeC (3 wire version) + LC87FBL08A

■Flash ROM Programming Boards

Package	Programming boards
QFP36	W87F24Q
VQLP32	(build-to-order)

■Flash ROM Programmer

Maker		Model	Supported version	Device
Flash Support Group, Inc. (FSG)	Single Programmer	AF9709/AF9709B/AF9709C (Including Ando Electric Co., Ltd. models)	Rev 03.28 or later	87F008SU
	Gang Programmer	AF9723/AF9723B(Main body) (Including Ando Electric Co., Ltd. models)	-	-
		AF9833(Unit) (Including Ando Electric Co., Ltd. models)	-	-
Flash Support Group, Inc. (FSG) + Our company (Note 1)	In-circuit Programmer	AF9101/AF9103(Main body) (FSG models)	(Note 2)	-
		SIB87(Inter Face Driver) (Our company model)		
Our company	Single/Gang Programmer	SKK / SKK Type B / SKK Type C (SanyoFWS)	Application Version 1.06 or later Chip Data Version 2.34 or later	LC87FBL08
	In-circuit/Gang Programmer	SKK-DBG Type B / SKK-DBG Type C (SanyoFWS)		

For information about AF-Series:
Flash Support Group, Inc.
TEL: +81-53-459-1050
E-mail: sales@j-fsg.co.jp

Note1: On-board-programmer from FSG (AF9101/AF9103) and serial interface driver from Our company (SIB87) together
can give a PC-less, standalone on-board-programming capabilities.
Note2: It needs a special programming devices and applications depending on the use of programming environment. Please ask FSG or Our company for the information.

Package Dimensions

unit : mm (typ)
3162C

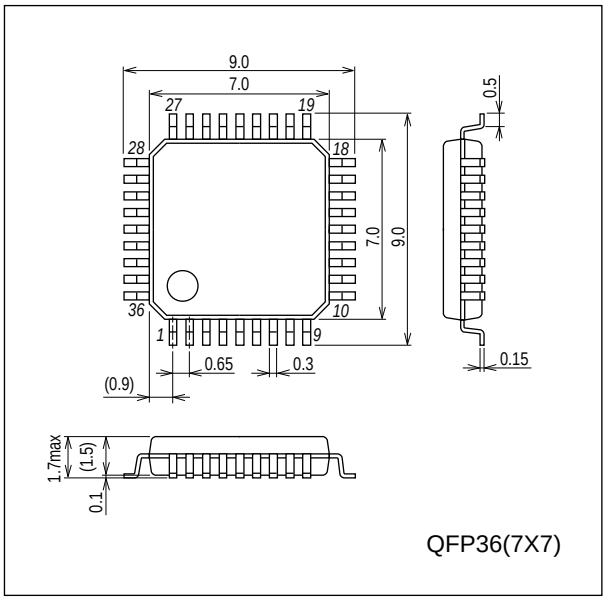

Package Dimensions

unit : mm (typ)
3331

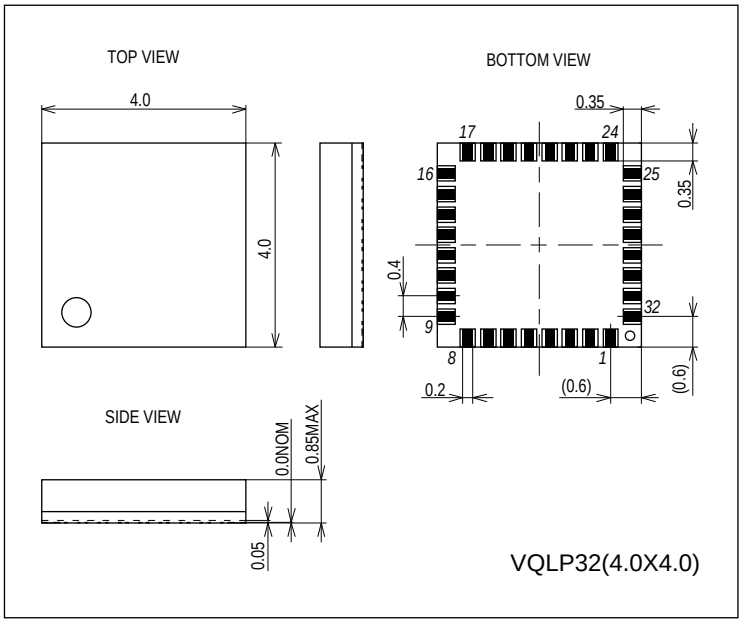

Pin Assignment

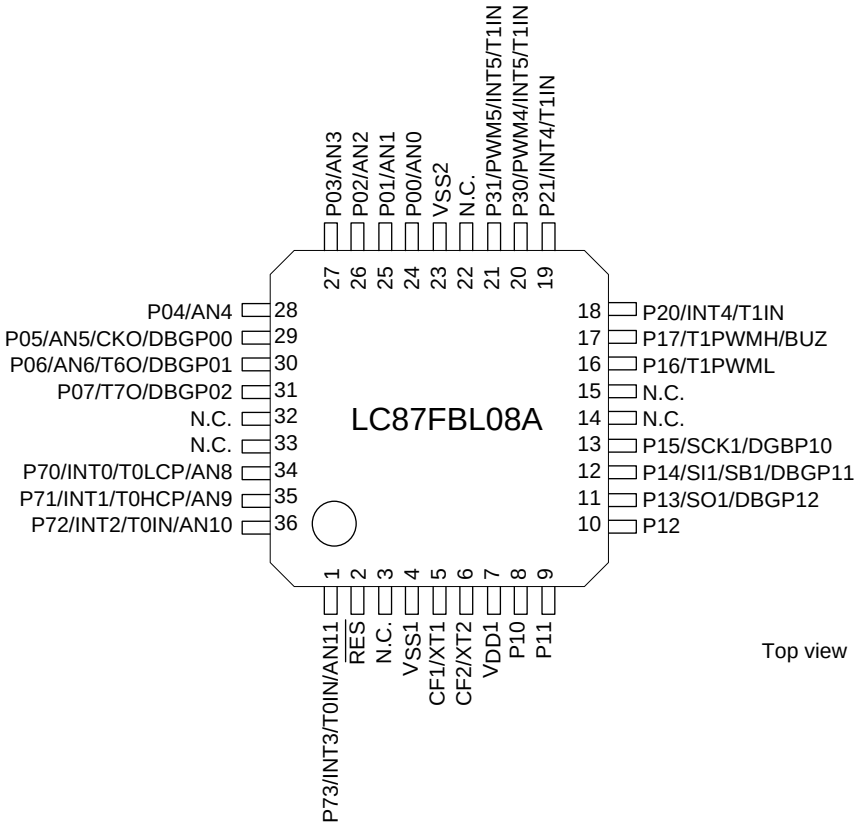

QFP36(7×7) “Lead-/Halogen-free Type”

QFP36	NAME
1	P73/INT3/T0IN/AN11
2	$\overline{\text{RES}}$
3	N.C.
4	$V_{SS}1$
5	CF1/XT1
6	CF2/XT2
7	$V_{DD}1$
8	P10
9	P11
10	P12
11	P13/SO1/DBGP12
12	P14/SI1/SB1/DBGP11
13	P15/SCK1/DBGP10
14	N.C.
15	N.C.
16	P16/T1PWML
17	P17/T1PWMH/BUZ
18	P20/INT4/T1IN

QFP36	NAME
19	P21/INT4/T1IN
20	P30/PWM4/INT5/T1IN
21	P31/PWM5/INT5/T1IN
22	N.C.
23	$V_{SS}2$
24	P00/AN0
25	P01/AN1
26	P02/AN2
27	P03/AN3
28	P04/AN4
29	P05/AN5/CKO/DBGP00
30	P06/AN6/T6O/DBGP01
31	P07/T7O/DBGP02
32	N.C.
33	N.C.
34	P70/INT0/T0LCP/AN8
35	P71/INT1/T0HCP/AN9
36	P72/INT2/T0IN/AN10

Note: N.C. pins must be held open (disconnected).

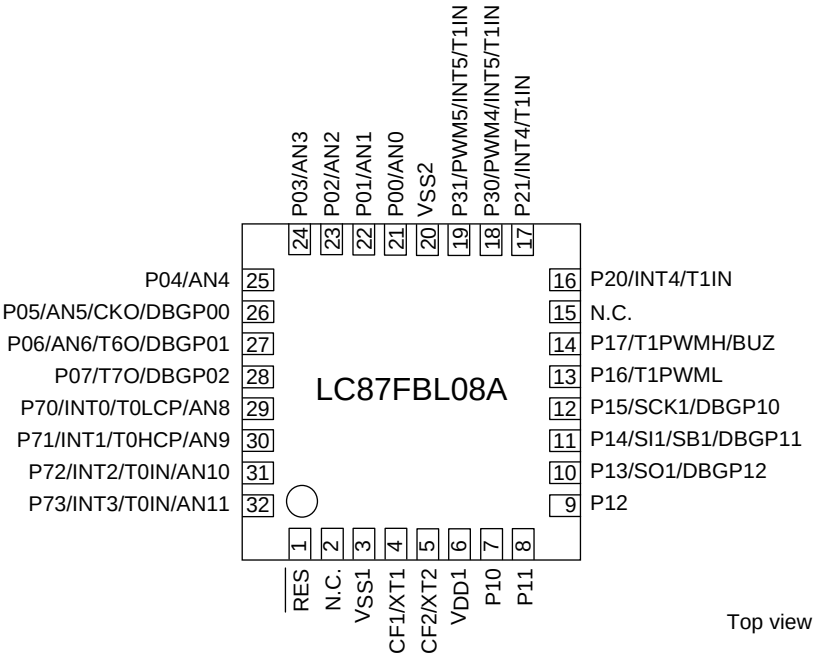

VQLP32(4×4) “Lead-/Halogen-free Type” (build-to-order)

VQLP32	NAME
1	$\overline{\text{RES}}$
2	N.C.
3	$V_{SS}1$
4	CF1/XT1
5	CF2/XT2
6	$V_{DD}1$
7	P10
8	P11
9	P12
10	P13/SO1/DBGP12
11	P14/SI1/SB1/DBGP11
12	P15/SCK1/DBGP10
13	P16/T1PWML
14	P17/T1PWMH/BUZ
15	N.C.
16	P20/INT4/T1IN

VQLP32	NAME
17	P21/INT4/T1IN
18	P30/PWM4/INT5/T1IN
19	P31/PWM5/INT5/T1IN
20	$V_{SS}2$
21	P00/AN0
22	P01/AN1
23	P02/AN2
24	P03/AN3
25	P04/AN4
26	P05/AN5/CKO/DBGP00
27	P06/AN6/T6O/DBGP01
28	P07/T7O/DBGP02
29	P70/INT0/T0LCP/AN8
30	P71/INT1/T0HCP/AN9
31	P72/INT2/T0IN/AN10
32	P73/INT3/T0IN/AN11

Note: N.C. pins must be held open (disconnected).

System Block Diagram

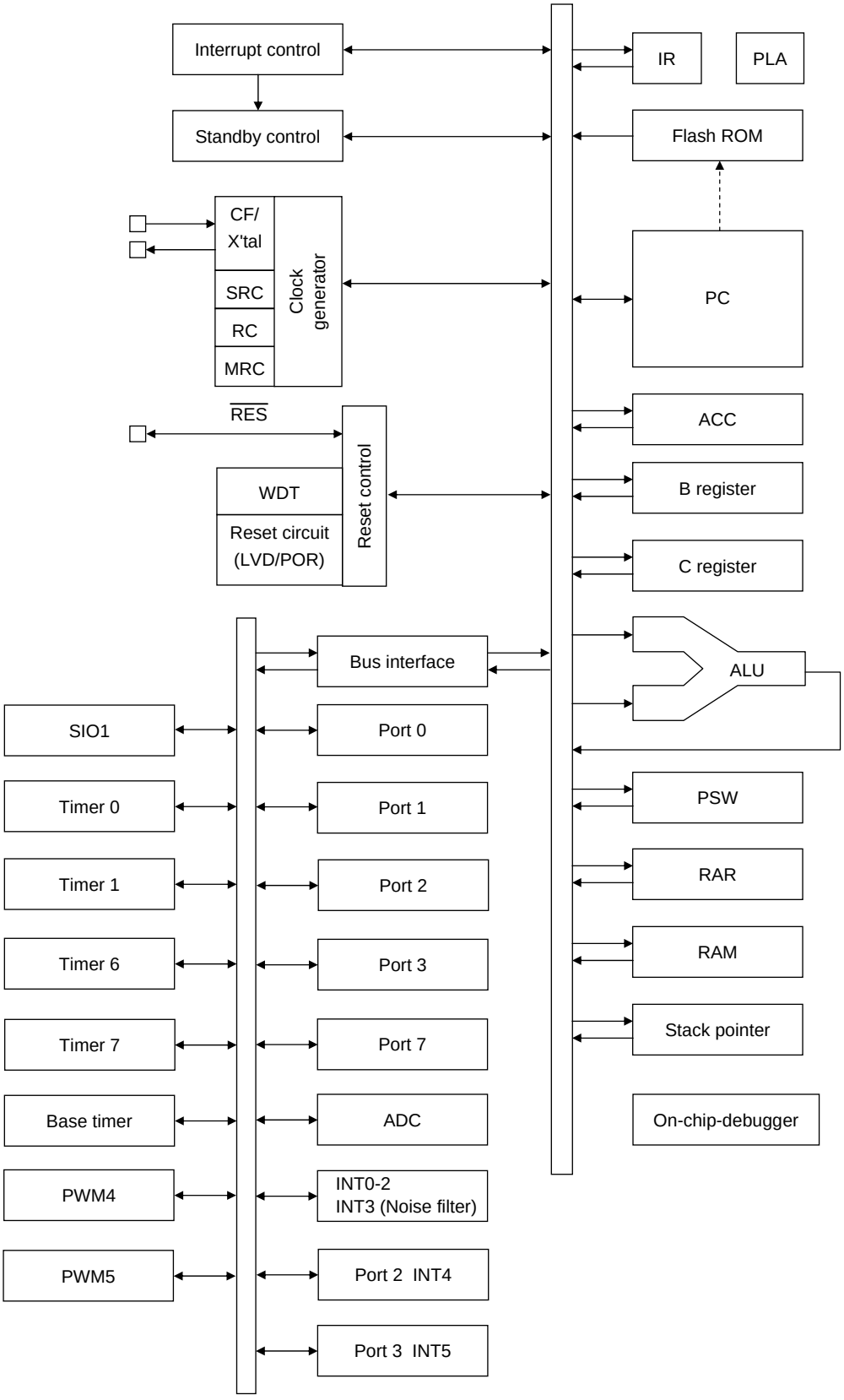

Pin Description

<table>
<tr><th>Pin Name</th><th>I/O</th><th>Description</th><th>Option</th></tr>
<tr><td>$V_{SS}1$, $V_{SS}2$</td><td>-</td><td>- Power supply pin</td><td>No</td></tr>
<tr><td>$V_{DD}1$</td><td>-</td><td>+ Power supply pin</td><td>No</td></tr>
<tr><td>Port 0
P00 to P07</td><td>I/O</td><td>• 8-bit I/O port
• I/O specifiable in 4-bit units
• Pull-up resistors can be turned on and off in 4-bit units.
• HOLD reset input
• Port 0 interrupt input
• Pin functions
P05: System clock output
P06: Timer 6 toggle output
P07: Timer 7 toggle output
P00(AN0) to P06(AN6): AD converter input
P05(DBGP00) to P07(DBGP02): On-chip debugger 0 port</td><td>Yes</td></tr>
<tr><td>Port 1
P10 to P17</td><td>I/O</td><td>• 8-bit I/O port
• I/O specifiable in 1-bit units
• Pull-up resistors can be turned on and off in 1-bit units.
• Pin functions
P13: SIO1 data output
P14: SIO1 data input / bus I/O
P15: SIO1 clock I/O
P16: Timer 1PWML output
P17: Timer 1PWMH output / beeper output
P15(DBGP10) to P13(DBGP12): On-chip-debugger 1 port</td><td>Yes</td></tr>
<tr><td>Port 2
P20 to P21</td><td>I/O</td><td>• 2-bit I/O port
• I/O specifiable in 1-bit units
• Pull-up resistors can be turned on and off in 1-bit units.
• Pin functions
P20 to P21: INT4 input / HOLD reset input / timer 1 event input / timer 0L capture input / timer 0H capture input
Interrupt acknowledge types
<table>
<tr><th></th><th>Rising</th><th>Falling</th><th>Rising & Falling</th><th>H level</th><th>L level</th></tr>
<tr><td>INT4</td><td>enable</td><td>enable</td><td>enable</td><td>disable</td><td>disable</td></tr>
</table></td><td>Yes</td></tr>
<tr><td>Port 3
P30 to P31</td><td>I/O</td><td>• 2-bit I/O port
• I/O specifiable in 1 bit units
• Pull-up resistors can be turned on and off in 1 bit units.
• Pin functions
P30: PWM4 output
P31: PWM5 output
P30 to P31: INT5 input/HOLD reset input / timer 1 event input / timer 0L capture input / timer 0H capture input
Interrupt acknowledge types
<table>
<tr><th></th><th>Rising</th><th>Falling</th><th>Rising & Falling</th><th>H level</th><th>L level</th></tr>
<tr><td>INT5</td><td>enable</td><td>enable</td><td>enable</td><td>disable</td><td>disable</td></tr>
</table></td><td>Yes</td></tr>
</table>

Continued on next page.

Continued from preceding page.

<table>
<tr><th>Pin Name</th><th>I/O</th><th>Description</th><th>Option</th></tr>
<tr><td>Port 7
P70 to P73</td><td>I/O</td><td>• 4-bit I/O port
• I/O specifiable in 1 bit units
• Pull-up resistors can be turned on and off in 1 bit units.
• Pin functions
P70: INT0 input / HOLD reset input / timer 0L capture input
P71: INT1 input / HOLD reset input / timer 0H capture input
P72: INT2 input / HOLD reset input / timer 0 event input / timer 0L capture input
P73: INT3 input (with noise filter) / timer 0 event input / timer 0H capture input
P70(AN8) to P73(AN11): AD converter input
Interrupt acknowledge types
<table>
<tr><th></th><th>Rising</th><th>Falling</th><th>Rising & Falling</th><th>H level</th><th>L level</th></tr>
<tr><td>INT0</td><td>enable</td><td>enable</td><td>disable</td><td>enable</td><td>enable</td></tr>
<tr><td>INT1</td><td>enable</td><td>enable</td><td>disable</td><td>enable</td><td>enable</td></tr>
<tr><td>INT2</td><td>enable</td><td>enable</td><td>enable</td><td>disable</td><td>disable</td></tr>
<tr><td>INT3</td><td>enable</td><td>enable</td><td>enable</td><td>disable</td><td>disable</td></tr>
</table></td><td>No</td></tr>
<tr><td>$\overline{\text{RES}}$</td><td>I/O</td><td>External reset input / internal reset output</td><td>No</td></tr>
<tr><td>CF1/XT1</td><td>I</td><td>• Ceramic resonator or 32.768kHz crystal oscillator input pin
• Pin function
General-purpose input port</td><td>No</td></tr>
<tr><td>CF2/XT2</td><td>I/O</td><td>• Ceramic resonator or 32.768kHz crystal oscillator output pin
• Pin function
General-purpose I/O port</td><td>No</td></tr>
</table>

Port Output Types

The table below lists the types of port outputs and the presence/absence of a pull-up resistor.
Data can be read into any input port even if it is in the output mode.

Port Name	Option selected in units of	Option type	Output type	Pull-up resistor
P00 to P07	1 bit	1	CMOS	Programmable (Note 1)
		2	Nch-open drain	No
P10 to P17	1 bit	1	CMOS	Programmable
		2	Nch-open drain	Programmable
P20 to P21	1 bit	1	CMOS	Programmable
		2	Nch-open drain	Programmable
P30 to P31	1 bit	1	CMOS	Programmable
		2	Nch-open drain	Programmable
P70	-	No	Nch-open drain	Programmable
P71 to P73	-	No	CMOS	Programmable
CF2/XT2	-	No	Ceramic resonator/32.768kHz crystal resonator output Nch-open drain (N-channel open drain when set to general-purpose output port)	No

Note 1: The control of the presence or absence of the programmable pull-up resistors for port 0 and the switching between low-and high-impedance pull-up connection is exercised in nibble (4-bit) units (P00 to 03 or P04 to 07).

User Option Table

Option Name	Option to be Applied on	Mask version *1	Flash-ROM Version	Option Selected in Units of	Option Selection
Port output type	P00 to P07	○	○	1 bit	CMOS
					Nch-open drain
	P10 to P17	○	○	1 bit	CMOS
					Nch-open drain
	P20 to P21	○	○	1 bit	CMOS
					Nch-open drain
	P30 to P31	○	○	1 bit	CMOS
					Nch-open drain
Program start address	-	× *2	○	-	00000h
					01E00h
Low-voltage detection reset function	Detect function	○	○	-	Enable:Use
					Disable:Not Used
	Detect level	○	○	-	3-level
Power-on reset function	Power-On reset level	○	○	-	4-level

*1: Mask option selection - No change possible after mask is completed.
*2: Program start address of the mask version is 00000h.

Recommended Unused Pin Connections

Port Name	Recommended Unused Pin Connections	
	Board	Software
P00 to P07	Open	Output low
P10 to P17	Open	Output low
P20 to P21	Open	Output low
P30 to P31	Open	Output low
P70 to P73	Open	Output low
CF1/XT1	Pulled low with a 100kΩ resistor or less	General-purpose input port
CF2/XT2	Pulled low with a 100kΩ resistor or less	General-purpose input port

On-chip Debugger Pin Connection Requirements

For the treatment of the on-chip debugger pins, refer to the separately available documents entitled "RD87 on-chip debugger installation manual".

Power Pin Treatment Recommendations ($V_{DD}1$, $V_{SS}1$)

Connect bypass capacitors that meet the following conditions between the $V_{DD}1$ and $V_{SS}1$ pins:

- Connect among the $V_{DD}1$ and $V_{SS}1$ pins and bypass capacitors C1 and C2 with the shortest possible heavy lead wires, making sure that the impedances between the both pins and the bypass capacitors are as possible (L1=L1' , L2=L2').
- Connect a large-capacity capacitor C1 and a small-capacity capacitor C2 in parallel.
  The capacitance of C2 should approximately 0.1μF.

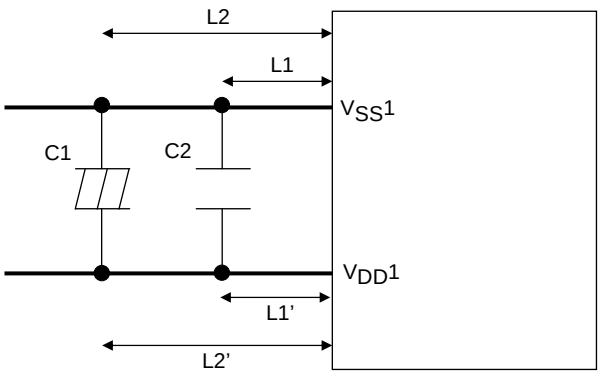

Note : Be sure to electrically short-circuit between the $V_{SS}1$ and $V_{SS}2$ pins.

Absolute Maximum Ratings at Ta = 25°C, $V_{SS}1 = V_{SS}2 = 0V$

Parameter		Symbol	Pin/Remarks	Conditions	Specification				
					V_{DD}[V]	min	typ	max	unit
Maximum supply voltage		V_{DD} max	$V_{DD}1$			-0.3		+6.5	V
Input voltage		V_I	CF1			-0.3		V_{DD}+0.3	
Input/output voltage		V_{IO}	Ports 0, 1, 2, 3, 7, CF2, $\overline{RES}$			-0.3		V_{DD}+0.3	
High level output current	Peak output current	IOPH(1)	Ports 0, 1, 2, 3	CMOS output select Per 1 applicable pin		-10			mA
		IOPH(2)	P71 to P73	Per 1 applicable pin		-5			
	Mean output current (Note 1-1)	IOMH(1)	Ports 0, 1, 2, 3 P71 to P73	CMOS output select Per 1 applicable pin		-7.5			
	Total output current	ΣIOAH(1)	Ports 0, 1, 2, 3, P71 to P73	Total of all applicable pins		-25			
Low level output current	Peak output current	IOPL(1)	P02 to P07, Ports 1, 2, 3	Per 1 applicable pin				20	
		IOPL(2)	P00, P01	Per 1 applicable pin				30	
		IOPL(3)	Ports 7, CF2	Per 1 applicable pin				10	
	Mean output current (Note 1-1)	IOML(1)	P02 to P07, Ports 1, 2, 3	Per 1 applicable pin				15	
		IOML(2)	P00, P01	Per 1 applicable pin				20	
		IOML(3)	Ports 7, CF2	Per 1 applicable pin				7.5	
	Total output current	ΣIOAL(1)	Ports 0, 1, Ports 2, 3, CF2	Total of all applicable pins				70	
		ΣIOAL(2)	Ports 7	Total of all applicable pins				15	
Power dissipation		Pd max(1)	QFP36 (7×7)	Ta=-40 to +85°C Package only				120	mW
		Pd max(2)		Ta=-40 to +85°C Package with thermal resistance board (Note 1-2)				275	
Operating ambient temperature		Topr				-40		+85	°C
Storage ambient temperature		Tstg				-55		+125	

Note 1-1: The mean output current is a mean value measured over 100ms.

Note 1-2: SEMI standards thermal resistance board (size: 76.1×114.3×1.6tmm, glass epoxy) is used.

Stresses exceeding Maximum Ratings may damage the device. Maximum Ratings are stress ratings only. Functional operation above the Recommended Operating Conditions is not implied. Extended exposure to stresses above the Recommended Operating Conditions may affect device reliability.

Allowable Operating Conditions at Ta = -40°C to +85°C, $V_{SS}1 = V_{SS}2 = 0V$

Parameter	Symbol	Pin/Remarks	Conditions		Specification			
				V_{DD}[V]	min	typ	max	unit
Operating supply voltage	V_{DD}	$V_{DD}1$	0.245µs ≤ tCYC ≤ 200µs		2.7		5.5	V
Memory sustaining supply voltage	VHD	$V_{DD}1$	RAM and register contents sustained in HOLD mode.		1.6			
High level input voltage	$V_{IH}(1)$	Ports 1, 2, 3, 7		2.7 to 5.5	$0.3V_{DD}+0.7$		V_{DD}	
	$V_{IH}(2)$	Ports 0		2.7 to 5.5	$0.3V_{DD}+0.7$		V_{DD}	
	$V_{IH}(3)$	CF1, CF2, $\overline{RES}$		2.7 to 5.5	$0.75V_{DD}$		V_{DD}	
Low level input voltage	$V_{IL}(1)$	Ports 1, 2, 3, 7		4.0 to 5.5	V_{SS}		$0.1V_{DD}+0.4$	
				2.7 to 4.0	V_{SS}		$0.2V_{DD}$	
	$V_{IL}(2)$	Ports 0		4.0 to 5.5	V_{SS}		$0.15V_{DD}+0.4$	
				2.7 to 4.0	V_{SS}		$0.2V_{DD}$	
	$V_{IL}(3)$	CF1, CF2, $\overline{RES}$		2.7 to 5.5	V_{SS}		$0.25V_{DD}$	
High level output current	$I_{OH}(1)$	Ports 0, 1, 2, P71 to P73	Per 1 applicable pin	4.5 to 5.5	-1.0			mA
	$I_{OH}(2)$			2.7 to 4.5	-0.35			
	$I_{OH}(3)$	Ports 3, P05 (System clock output function used)	Per 1 applicable pin	4.5 to 5.5	-6.0			
	$I_{OH}(4)$			2.7 to 4.5	-1.4			
	$\Sigma I_{OH}(1)$	Ports 0, 1, 2, 3, 7	Total of all applicable pins	4.5 to 5.5	-25			
	$\Sigma I_{OH}(2)$			2.7 to 4.5	-11.2			
Low level output current	$I_{OL}(1)$	Ports 0, 1, 2, 3	Per 1 applicable pin	4.5 to 5.5			10	
	$I_{OL}(2)$			2.7 to 4.5			1.4	
	$I_{OL}(3)$	Ports 7, CF2	Per 1 applicable pin	2.7 to 5.5			1.4	
	$I_{OL}(4)$	P00, P01	Per 1 applicable pin	4.5 to 5.5			25	
	$I_{OL}(5)$			2.7 to 4.5			4	
	$\Sigma I_{OL}(1)$	Ports 0, 1, 2, 3, CF2	Total of all applicable pins	4.5 to 5.5			70	
	$\Sigma I_{OL}(2)$			2.7 to 4.5			34.6	
	$\Sigma I_{OL}(3)$	Ports 7	Total of all applicable pins	2.7 to 5.5			5.6	
Instruction cycle time (Note 2-1)	tCYC			2.7 to 5.5	0.245		200	µs
External system clock frequency	FEXCF	CF1	• CF2 pin open • System clock frequency division ratio=1/1 • External system clock duty=50±5%	2.7 to 5.5	0.1		12	MHz
			• CF2 pin open • System clock frequency division ratio=1/2 • External system clock duty=50±5%	3.0 to 5.5	0.2		24.4	

Note 2-1: Relationship between tCYC and oscillation frequency is 3/FmCF at a division ratio of 1/1 and 6/FmCF at a division ratio of 1/2.

Continued on next page.

Continued from preceding page.

Parameter	Symbol	Pin/Remarks	Conditions	V_{DD}[V]	Specification min	typ	max	unit
Oscillation frequency range (Note 2-2)	FmCF(1)	CF1, CF2	12MHz ceramic oscillation. See Fig. 1.	2.7 to 5.5		12		MHz
	FmCF(2)	CF1, CF2	10MHz ceramic oscillation. See Fig. 1.	2.7 to 5.5		10		
	FmCF(3)	CF1, CF2	4MHz ceramic oscillation. CF oscillation normal amplifier size selected. (CFLAMP=0) See Fig. 1.	2.7 to 5.5		4		
			4MHz ceramic oscillation. CF oscillation low amplifier size selected. (CFLAMP=1) See Fig. 1.	2.7 to 5.5		4		
	FmMRC(1)		Frequency variable RC oscillation. (Note 2-3)	2.7 to 5.5	7.76	8.0	8.24	
	FmMRC(2)		Frequency variable RC oscillation. • Ta=-10 to +85°C (Note 2-3)	2.7 to 5.5	7.80	8.0	8.20	
	FmRC		Internal medium-speed RC oscillation	2.7 to 5.5	0.5	1.0	2.0	
	FmSRC		Internal low-speed RC oscillation	2.7 to 5.5	50	100	200	kHz
	FsX'tal	XT1, XT2	32.768kHz crystal oscillation See Fig. 1.	2.7 to 5.5		32.768		
Oscillation stabilization time	tmsMRC		When Frequency variable RC oscillation state is switched from stopped to enabled. See Fig. 3.	2.7 to 5.5			100	μs

Note 2-2: See Tables 1 and 2 for the oscillation constants.

Note 2-3: When switching the system clock, allow an oscillation stabilization time of 100μs or longer after the frequency variable RC oscillator circuit transmits from the "oscillation stopped" to "oscillation enabled" state.

Electrical Characteristics at Ta = -40°C to +85°C, $V_{SS}1 = V_{SS}2 = 0V$

Parameter	Symbol	Pin/Remarks	Conditions		Specification			
				V_{DD}[V]	min	typ	max	unit
High level input current	I_{IH}(1)	Ports 0, 1, 2, 3, Ports 7, $\overline{RES}$	Output disabled Pull-up resistor off $V_{IN}=V_{DD}$ (Including output Tr's off leakage current)	2.7 to 5.5			1	µA
	I_{IH}(2)	CF1, CF2	Input port selected $V_{IN}=V_{DD}$	2.7 to 5.5			1	
	IIH(3)	CF1	Reset state $V_{IN}=V_{DD}$	2.7 to 5.5			15	
Low level input current	I_{IL}(1)	Ports 0, 1, 2, 3, Ports 7, $\overline{RES}$	Output disabled Pull-up resistor off $V_{IN}=V_{SS}$ (Including output Tr's off leakage current)	2.7 to 5.5	-1			
	I_{IL}(2)	CF1, CF2	Input port selected $V_{IN}=V_{SS}$	2.7 to 5.5	-1			
High level output voltage	V_{OH}(1)	Ports 0, 1, 2, P71 to P73	I_{OH}=-1mA	4.5 to 5.5	V_{DD}-1			V
	V_{OH}(2)		I_{OH}=-0.35mA	2.7 to 5.5	V_{DD}-0.4			
	V_{OH}(3)	Ports 3, P05 (System clock output function used)	I_{OH}=-6mA	4.5 to 5.5	V_{DD}-1			
	V_{OH}(4)		I_{OH}=-1.4mA	2.7 to 5.5	V_{DD}-0.4			
Low level output voltage	V_{OL}(1)	Ports 0, 1, 2, 3	I_{OL}=10mA	4.5 to 5.5			1.5	
	V_{OL}(2)		I_{OL}=1.4mA	2.7 to 5.5			0.4	
	V_{OL}(3)	Ports7, CF2	I_{OL}=1.4mA	2.7 to 5.5			0.4	
	V_{OL}(4)	P00, P01	I_{OL}=25mA	4.5 to 5.5			1.5	
	V_{OL}(5)		I_{OL}=4mA	2.7 to 5.5			0.4	
Pull-up resistance	Rpu(1)	Ports 0, 1, 2, 3, Ports 7	$V_{OH}=0.9V_{DD}$ When Port 0 selected low-impedance pull-up.	4.5 to 5.5	15	35	80	kΩ
	Rpu(2)			2.7 to 4.5	18	50	150	
	Rpu(3)	Port 0	$V_{OH}=0.9V_{DD}$ When Port 0 selected high-impedance pull-up.	2.7 to 5.5	100	200	300	
Hysteresis voltage	VHYS	Ports 1, 2, 3, 7, $\overline{RES}$		2.7 to 5.5		$0.1V_{DD}$		V
Pin capacitance	CP	All pins	For pins other than that under test: $V_{IN}=V_{SS}$ f=1MHz Ta=25°C	2.7 to 5.5		10		pF

SIO1 Serial I/O Characteristics at Ta = -40°C to +85°C, $V_{SS}1 = V_{SS}2 = 0V$ (Note 4)

Parameter			Symbol	Pin/ Remarks	Conditions	V_{DD}[V]	Specification min	typ	max	unit
Serial clock	Input clock	Frequency	tSCK(3)	SCK1(P15)	• See Fig. 5.	2.7 to 5.5	2			tCYC
		Low level pulse width	tSCKL(3)				1			
		High level pulse width	tSCKH(3)				1			
	Output clock	Frequency	tSCK(4)	SCK1(P15)	• CMOS output selected • See Fig. 5.	2.7 to 5.5	2			
		Low level pulse width	tSCKL(4)				1/2			tSCK
		High level pulse width	tSCKH(4)				1/2			
Serial input	Data setup time		tsDI(2)	SB1(P14), SI1(P14)	• Must be specified with respect to rising edge of SIOCLK. • See Fig. 5.	2.7 to 5.5	(1/3)tCYC +0.01			µs
	Data hold time		thDI(2)				0.01			
Serial output	Output delay time		tdD0(4)	SO1(P13), SB1(P14)	• Must be specified with respect to falling edge of SIOCLK. • Must be specified as the time to the beginning of output state change in open drain output mode. • See Fig. 5.	2.7 to 5.5			(1/2)tCYC +0.05	

Note 4: These specifications are theoretical values. Add margin depending on its use.

Pulse Input Conditions at Ta = -40°C to +85°C, $V_{SS}1 = V_{SS}2 = 0V$

Parameter	Symbol	Pin/Remarks	Conditions	V_{DD}[V]	Specification min	typ	max	unit
High/low level pulse width	tPIH(1) tPIL(1)	INT0(P70), INT1(P71), INT2(P72), INT4(P20 to P21), INT5(P30 to P31)	• Interrupt source flag can be set. • Event inputs for timer 0 or 1 are enabled.	2.7 to 5.5	1			tCYC
	tPIH(2) tPIL(2)	INT3(P73) when noise filter time constant is 1/1	• Interrupt source flag can be set. • Event inputs for timer 0 are enabled.	2.7 to 5.5	2			
	tPIH(3) tPIL(3)	INT3(P73) when noise filter time constant is 1/32	• Interrupt source flag can be set. • Event inputs for timer 0 are nabled.	2.7 to 5.5	64			
	tPIH(4) tPIL(4)	INT3(P73) when noise filter time constant is 1/128	• Interrupt source flag can be set. • Event inputs for timer 0 are enabled.	2.7 to 5.5	256			
	tPIL(5)	$\overline{RES}$	• Resetting is enabled.	2.7 to 5.5	200			µs

AD Converter Characteristics at $V_{SS}1 = V_{SS}2 = 0V$

<12bits AD Converter Mode/Ta = -40°C to +85°C >

Parameter	Symbol	Pin/Remarks	Conditions		Specification			
				V_{DD}[V]	min	typ	max	unit
Resolution	N	AN0(P00) to AN6(P06), AN8(P70) to AN11(P73)		2.7 to 5.5		12		bit
Absolute accuracy	ET		(Note 6-1)	3.0 to 5.5			±16	LSB
				2.7 to 5.5			±20	
Conversion time	TCAD		• See Conversion time calculation formulas. (Note 6-2)	4.0 to 5.5	32		115	µs
				3.0 to 5.5	64		115	
				2.7 to 5.5	134		215	
Analog input voltage range	VAIN			2.7 to 5.5	V_{SS}		V_{DD}	V
Analog port input current	IAINH		VAIN=V_{DD}	2.7 to 5.5			1	µA
	IAINL		VAIN=V_{SS}	2.7 to 5.5	-1			

<8bits AD Converter Mode/Ta = -40°C to +85°C >

Parameter	Symbol	Pin/Remarks	Conditions		Specification			
				V_{DD}[V]	min	typ	max	unit
Resolution	N	AN0(P00) to AN6(P06), AN8(P70) to AN11(P73)		2.7 to 5.5		8		bit
Absolute accuracy	ET		(Note 6-1)	2.7 to 5.5			±1.5	LSB
Conversion time	TCAD		• See Conversion time calculation formulas. (Note 6-2)	4.0 to 5.5	20		90	µs
				3.0 to 5.5	40		90	
				2.7 to 5.5	80		135	
Analog input voltage range	VAIN			2.7 to 5.5	V_{SS}		V_{DD}	V
Analog port input current	IAINH		VAIN=V_{DD}	2.7 to 5.5			1	µA
	IAINL		VAIN=V_{SS}	2.7 to 5.5	-1			

Conversion time calculation formulas:

12bits AD Converter Mode: TCAD(Conversion time) = ((52/(AD division ratio))+2)×(1/3)×tCYC

8bits AD Converter Mode: TCAD(Conversion time) = ((32/(AD division ratio))+2)×(1/3)×tCYC

External oscillation (FmCF)	Operating supply voltage range (V_{DD})	System division ratio (SYSDIV)	Cycle time (tCYC)	AD division ratio (ADDIV)	AD conversion time (TCAD)	
					12bit AD	8bit AD
CF-12MHz	4.0V to 5.5V	1/1	250ns	1/8	34.8µs	21.5µs
	3.0V to 5.5V	1/1	250ns	1/16	69.5µs	42.8µs
	2.7V to 5.5V	1/1	250ns	1/32	138.8µs	85.5µs
CF-8MHz	4.0V to 5.5V	1/1	375ns	1/8	52.25µs	32.25µs
	3.0V to 5.5V	1/1	375ns	1/16	104.25µs	64.25µs
	2.7V to 5.5V	1/1	375ns	1/32	208.25µs	128.25µs
CF-4MHz	3.0V to 5.5V	1/1	750ns	1/8	104.5µs	64.5µs
	2.7V to 5.5V	1/1	750ns	1/16	208.5µs	128.5µs

Note 6-1: The quantization error (±1/2LSB) must be excluded from the absolute accuracy. The absolute accuracy must be measured in the microcontroller's state in which no I/O operations occur at the pins adjacent to the analog input channel.

Note 6-2: The conversion time refers to the period from the time an instruction for starting a conversion process till the time the conversion results register(s) are loaded with a complete digital conversion value corresponding to the analog input value.

The conversion time is 2 times the normal-time conversion time when:

- The first AD conversion is performed in the 12-bit AD conversion mode after a system reset.
- The first AD conversion is performed after the AD conversion mode is switched from 8-bit to 12-bit conversion mode.

Power-on Reset (POR) Characteristics at Ta = -40°C to +85°C, $V_{SS}1 = V_{SS}2 = 0V$

Parameter	Symbol	Pin/Remarks	Conditions	Specification				
				Option selected voltage	min	typ	max	unit
POR release voltage	PORRL		• Select from option. (Note 7-1)	2.57V	2.45	2.57	2.69	V
				2.87V	2.75	2.87	2.99	
				3.86V	3.73	3.86	3.99	
				4.35V	4.21	4.35	4.49	
Detection voltage unknown state	POUKS		• See Fig. 7. (Note 7-2)			0.7	0.95	
Power supply rise time	PORIS		• Power supply rise time from 0V to 1.6V.				100	ms

Note7-1: The POR release level can be selected out of 4 levels only when the LVD reset function is disabled.
Note7-2: POR is in an unknown state before transistors start operation.

Low Voltage Detection Reset (LVD) Characteristics at Ta = -40°C to +85°C, $V_{SS}1 = V_{SS}2 = 0V$

Parameter	Symbol	Pin/Remarks	Conditions	Specification				
				Option selected voltage	min	typ	max	unit
LVD reset voltage (Note 8-2)	LVDET		• Select from option. (Note 8-1) (Note 8-3) • See Fig. 8.	2.81V	2.71	2.81	2.91	V
				3.79V	3.67	3.79	3.91	
				4.28V	4.15	4.28	4.41	
LVD hysteresys width	LVHYS			2.81V		60		mV
				3.79V		65		
				4.28V		65		
Detection voltage unknown state	LVUKS		• See Fig. 8. (Note 8-4)			0.7	0.95	V
Low voltage detection minimum width (Reply sensitivity)	TLVDW		• LVDET-0.5V • See Fig. 9.		0.2			ms

Note8-1: The LVD reset level can be selected out of 3 levels only when the LVD reset function is enabled.
Note8-2: LVD reset voltage specification values do not include hysteresis voltage.
Note8-3: LVD reset voltage may exceed its specification values when port output state changes and/or when a large current flows through port.
Note8-4: LVD is in an unknown state before transistors start operation.

Consumption Current Characteristics at Ta = -40°C to +85°C, $V_{SS}1 = V_{SS}2 = 0V$

Parameter	Symbol	Pin/ Remarks	Conditions	V_{DD}[V]	Specification min	typ	max	unit
Normal mode consumption current (Note 9-1) (Note 9-2)	IDDOP(1)	$V_{DD}1$	• FmCF=12MHz ceramic oscillation mode • System clock set to 12MHz side • Internal low speed and medium speed RC oscillation stopped. • Frequency variable RC oscillation stopped. • 1/1 frequency division ratio	2.7 to 5.5		4.8	8.7	
				2.7 to 3.6		3.0	5.0	
	IDDOP(2)		• CF1=24MHz external clock • System clock set to CF1 side • Internal low speed and medium speed RC oscillation stopped. • Frequency variable RC oscillation stopped. • 1/2 frequency division ratio	3.0 to 5.5		5.0	9.6	
				3.0 to 3.6		3.2	6.0	
	IDDOP(3)		• FmCF=10MHz ceramic oscillation mode • System clock set to 10MHz side • Internal low speed and medium speed RC oscillation stopped. • Frequency variable RC oscillation stopped. • 1/1 frequency division ratio	2.7 to 5.5		4.1	7.8	
				2.7 to 3.6		2.6	4.9	
	IDDOP(4)		• FmCF=4MHz ceramic oscillation mode • System clock set to 4MHz side • Internal low speed and medium speed RC oscillation stopped. • Frequency variable RC oscillation stopped. • 1/1 frequency division ratio	2.7 to 5.5		2.2	5.1	
				2.7 to 3.6		1.5	2.7	mA
	IDDOP(5)		• CF oscillation low amplifier size selected. (CFLAMP=1) • FmCF=4MHz ceramic oscillation mode • System clock set to 4MHz side • Internal low speed and medium speed RC oscillation stopped. • Frequency variable RC oscillation stopped. • 1/4 frequency division ratio	2.7 to 5.5		0.95	2.4	
				2.7 to 3.6		0.50	1.1	
	IDDOP(6)		• FsX'tal=32.768kHz crystal oscillation mode • Internal low speed RC oscillation stopped. • System clock set to internal medium speed RC oscillation. • Frequency variable RC oscillation stopped. • 1/2 frequency division ratio	2.7 to 5.5		0.42	1.4	
				2.7 to 3.6		0.25	0.76	
	IDDOP(7)		• FsX'tal=32.768kHz crystal oscillation mode • Internal low speed and medium speed RC oscillation stopped. • System clock set to 8MHz with frequency variable RC oscillation • 1/1 frequency division ratio	2.7 to 5.5		3.2	5.4	
				2.7 to 3.6		2.3	4.2	
	IDDOP(8)		• External FsX'tal and FmCF oscillation stopped. • System clock set to internal low speed RC oscillation. • Internal medium speed RC oscillation sopped. • Frequency variable RC oscillation stopped. • 1/1 frequency division ratio	2.7 to 5.5		55	169	
				2.7 to 3.6		39	109	
	IDDOP(9)		• External FsX'tal and FmCF oscillation stopped. • System clock set to internal low speed RC oscillation. • Internal medium speed RC oscillation stopped. • Frequency variable RC oscillation stopped. • 1/1 frequency division ratio • Ta=-10 to +50°C	5.0		55	136	µA
				3.3		39	103	

Note9-1: Values of the consumption current do not include current that flows into the output transistors and internal pull-up resistors.

Note9-2: The consumption current values do not include operational current of LVD function if not specified.

Continued on next page.

Continued from preceding page.

Parameter	Symbol	Pin/ Remarks	Conditions	V_{DD}[V]	Specification min	typ	max	unit
Normal mode consumption current (Note 9-1) (Note 9-2)	IDDOP(10)	V_{DD}1	• FsX'tal=32.768kHz crystal oscillation mode • System clock set to 32.768kHz side • Internal low speed and medium speed RC oscillation stopped. • Frequency variable RC oscillation stopped. • 1/2 frequency division ratio	2.7 to 5.5		28	89	μA
				2.7 to 3.6		11	38	
	IDDOP(11)		• FsX'tal=32.768kHz crystal oscillation mode • System clock set to 32.768kHz side • Internal low speed and medium speed RC oscillation stopped. • Frequency variable RC oscillation stopped. • 1/2 frequency division ratio • Ta=-10 to +50°C	5.0		28	78	
				3.3		11	29	
HALT mode consumption current (Note 9-1) (Note 9-2)	IDDHALT(1)		• HALT mode • FmCF=12MHz ceramic oscillation mode • System clock set to 12MHz side • Internal low speed and medium speed RC oscillation stopped. • Frequency variable RC oscillation stopped. • 1/1 frequency division ratio	2.7 to 5.5		2.4	4.5	mA
				2.7 to 3.6		1.3	2.2	
	IDDHALT(2)		• HALT mode • CF1=24MHz external clock • System clock set to CF1 side • Internal low speed and medium speed RC oscillation stopped. • Frequency variable RC oscillation stopped. • 1/2 frequency division ratio	3.0 to 5.5		2.7	5.3	
				3.0 to 3.6		1.6	2.9	
	IDDHALT(3)		• HALT mode • FmCF=10MHz ceramic oscillation mode • System clock set to 10MHz side • Internal low speed and medium speed RC oscillation stopped. • Frequency variable RC oscillation stopped. • 1/1 frequency division ratio	2.7 to 5.5		2.0	4.1	
				2.7 to 3.6		1.1	2.1	
	IDDHALT(4)		• HALT mode • FmCF=4MHz ceramic oscillation mode • System clock set to 4MHz side • Internal low speed and medium speed RC oscillation stopped. • Frequency variable RC oscillation stopped. • 1/1 frequency division ratio	2.7 to 5.5		1.2	3.3	
				2.7 to 3.6		0.50	1.2	
	IDDHALT(5)		• HALT mode • CF oscillation low amplifier size selected. (CFLAMP=1) • FmCF=4MHz ceramic oscillation mode • System clock set to 4MHz side • Internal low speed and medium speed RC oscillation stopped. • Frequency variable RC oscillation stopped. • 1/4 frequency division ratio	2.7 to 5.5		0.70	1.8	
				2.7 to 3.6		0.30	0.68	
	IDDHALT(6)		• HALT mode • FsX'tal=32.768kHz crystal oscillation mode • Internal low speed RC oscillation stopped. • System clock set to internal medium speed RC oscillation • Frequency variable RC oscillation stopped. • 1/2 frequency division ratio	2.7 to 5.5		0.30	0.90	
				2.7 to 3.6		0.20	0.44	

Note9-1: Values of the consumption current do not include current that flows into the output transistors and internal pull-up resistors.

Note9-2: The consumption current values do not include operational current of LVD function if not specified.

Continued on next page.

Continued from preceding page.

Parameter	Symbol	Pin/ remarks	Conditions	Specification				
				V_{DD}[V]	min	typ	max	unit
HALT mode consumption current (Note 9-1) (Note 9-2)	IDDHALT(7)	V_{DD}1	• HALT mode • FsX'tal=32.768kHz crystal oscillation mode • Internal low speed and medium speed RC oscillation stopped. • System clock set to 8MHz with frequency variable RC oscillation • 1/1 frequency division ratio	2.7 to 5.5		1.3	2.3	mA
				2.7 to 3.6		0.90	1.5	
	IDDHALT(8)		• HALT mode • External FsX'tal and FmCF oscillation stopped. • System clock set to internal low speed RC oscillation. • Internal medium speed RC oscillation stopped. • Frequency variable RC oscillation stopped. • 1/1 frequency division ratio	2.7 to 5.5		18	68	μA
				2.7 to 3.6		11	35	
	IDDHALT(9)		• HALT mode • External FsX'tal and FmCF oscillation stopped. • System clock set to internal low speed RC oscillation. • Internal medium speed RC oscillation stopped. • Frequency variable RC oscillation stopped. • 1/1 frequency division ratio • Ta=-10 to +50°C	5.0		18	46	
				3.3		11	27	
	IDDHALT(10)		• HALT mode • FsX'tal=32.768kHz crystal oscillation mode • System clock set to 32.768kHz side • Internal low speed and medium speed RC oscillation stopped. • Frequency variable RC oscillation stopped. • 1/2 frequency division ratio	2.7 to 5.5		20	85	
				2.7 to 3.6		5.6	30	
	IDDHALT(11)		• HALT mode • FsX'tal=32.768kHz crystal oscillation mode • System clock set to 32.768kHz side • Internal low speed and medium speed RC oscillation stopped. • Frequency variable RC oscillation stopped. • 1/2 frequency division ratio • Ta=-10 to +50°C	5.0		20	51	
				3.3		5.6	17	
HOLD mode consumption current (Note 9-1) (Note 9-2)	IDDHOLD(1)		HOLD mode • CF1=V_{DD} or open (External clock mode)	2.7 to 5.5		0.012	23	
				2.7 to 3.6		0.008	11	
	IDDHOLD(2)		HOLD mode • CF1=V_{DD} or open (External clock mode) • Ta=-10 to +50°C	5.0		0.012	1.2	
				3.3		0.008	0.59	
	IDDHOLD(3)		HOLD mode • CF1=V_{DD} or open (External clock mode) • LVD option selected	2.7 to 5.5		2.0	26	
				2.7 to 3.6		1.6	13	
	IDDHOLD(4)		HOLD mode • CF1=V_{DD} or open (External clock mode) • Ta=-10 to +50°C • LVD option selected	5.0		2.0	3.8	
				3.3		1.6	2.8	
Timer HOLD mode consumption current (Note 9-1) (Note 9-2)	IDDHOLD(5)		Timer HOLD mode • FsX'tal=32.768 kHz crystal oscillation mode	2.7 to 5.5		16	70	
				2.7 to 3.6		4.2	25	
	IDDHOLD(6)		Timer HOLD mode • FsX'tal=32.768kHz crystal oscillation mode • Ta=-10 to +50°C	5.0		16	42	
				3.3		4.2	11	

Note9-1: Values of the consumption current do not include current that flows into the output transistors and internal pull-up resistors.

Note9-2: The consumption current values do not include operational current of LVD function if not specified.

F-ROM Programming Characteristics at Ta = +10°C to +55°C, $V_{SS}1 = V_{SS}2 = 0V$

Parameter	Symbol	Pin/Remarks	Conditions		Specification			
				V_{DD}[V]	min	typ	max	unit
Onboard programming current	IDDFW(1)	$V_{DD}1$	• Only current of the Flash block.	2.7 to 5.5		5	10	mA
Programming time	tFW(1)		• Erasing time	2.7 to 5.5		20	30	ms
	tFW(2)		• Programming time			40	60	µs

Characteristics of a Sample Main System Clock Oscillation Circuit

Given below are the characteristics of a sample main system clock oscillation circuit that are measured using a Our designated oscillation characteristics evaluation board and external components with circuit constant values with which the oscillator vendor confirmed normal and stable oscillation.

Table 1 Characteristics of a Sample Main System Clock Oscillator Circuit with a Ceramic Oscillator

• CF oscillation normal amplifier size selected (CFLAMP=0)

■MURATA

Nominal Frequency	Type	Oscillator Name	Circuit Constant				Operating Voltage Range [V]	Oscillation Stabilization Time		Remarks
			C1 [pF]	C2 [pF]	Rf [Ω]	Rd [Ω]		typ [ms]	max [ms]	
12MHz	SMD	CSTCE12M0G52-R0	(10)	(10)	Open	680	2.7 to 5.5	0.02	0.3	Internal C1, C2
10MHz	SMD	CSTCE10M0G52-R0	(10)	(10)	Open	680	2.7 to 5.5	0.02	0.3	
	LEAD	CSTLS10M0G53-B0	(15)	(15)	Open	680	2.7 to 5.5	0.02	0.3	
8MHz	SMD	CSTCE8M00G52-R0	(10)	(10)	Open	1.0k	2.7 to 5.5	0.02	0.3	
	LEAD	CSTLS8M00G53-B0	(15)	(15)	Open	1.0k	2.7 to 5.5	0.02	0.3	
6MHz	SMD	CSTCR6M00G53-R0	(15)	(15)	Open	1.5k	2.7 to 5.5	0.02	0.3	
	LEAD	CSTLS6M00G53-B0	(15)	(15)	Open	1.5k	2.7 to 5.5	0.02	0.3	
4MHz	SMD	CSTCR4M00G53-R0	(15)	(15)	Open	1.5k	2.7 to 5.5	0.03	0.45	
	LEAD	CSTLS4M00G53-B0	(15)	(15)	Open	1.5k	2.7 to 5.5	0.02	0.3	

• CF oscillation low amplifier size selected (CFLAMP=1)

■MURATA

Nominal Frequency	Type	Oscillator Name	Circuit Constant				Operating Voltage Range [V]	Oscillation Stabilization Time		Remarks
			C1 [pF]	C2 [pF]	Rf [Ω]	Rd [Ω]		typ [ms]	max [ms]	
12MHz	SMD	CSTCE12M0G52-R0	(10)	(10)	Open	470	3.9 to 5.5	0.04	0.6	Internal C1, C2
10MHz	SMD	CSTCE10M0G52-R0	(10)	(10)	Open	470	2.9 to 5.5	0.03	0.45	
	LEAD	CSTLS10M0G53-B0	(15)	(15)	Open	470	3.6 to 5.5	0.03	0.45	
		CSTLS10M0G53095-B0	(15)	(15)	Open	470	2.7 to 5.5	0.02	0.3	
8MHz	SMD	CSTCE8M00G52-R0	(10)	(10)	Open	680	2.7 to 5.5	0.03	0.45	
	LEAD	CSTLS8M00G53-B0	(15)	(15)	Open	680	3.0 to 5.5	0.03	0.45	
		CSTLS8M00G53093-B0	(15)	(15)	Open	680	2.7 to 5.5	0.02	0.3	
6MHz	SMD	CSTCR6M00G53-R0	(15)	(15)	Open	1.0k	2.7 to 5.5	0.03	0.45	
	LEAD	CSTLS6M00G53-B0	(15)	(15)	Open	1.0k	2.8 to 5.5	0.03	0.45	
		CSTLS6M00G53093-B0	(15)	(15)	Open	1.0k	2.7 to 5.5	0.02	0.3	
4MHz	SMD	CSTCR4M00G53-R0	(15)	(15)	Open	1.0k	2.7 to 5.5	0.04	0.6	
	LEAD	CSTLS4M00G53-B0	(15)	(15)	Open	1.0k	2.7 to 5.5	0.02	0.3	

The oscillation stabilization time refers to the time interval that is required for the oscillation to get stabilized in follwing cases (see Figure 3).

- The time interval that is required for the oscillation to get stabilized after the instruction for starting the mainclock oscillation circuit is executed.
- The time interval that is required for the oscillation to get stabilized after the HOLD mode is reset and oscillation is started.
- The time interval that is required for the oscillation to get stabilized after the X'tal Hold mode, under the state which the main clock oscillation is enabled, is reset and oscillation is started.

Characteristics of a Sample Subsystem Clock Oscillator Circuit

Given below are the characteristics of a sample subsystem clock oscillation circuit that are measured using a Our designated oscillation characteristics evaluation board and external components with circuit constant values with which the oscillator vendor confirmed normal and stable oscillation.

Table 2 Characteristics of a Sample Subsystem Clock Oscillator Circuit with a Crystal Oscillator

■EPSON TOYOCOM

Nominal Frequency	Type	Oscillator Name	Circuit Constant				Operating Voltage Range [V]	Oscillation Stabilization Time		Remarks
			C1 [pF]	C2 [pF]	Rf [Ω]	Rd [Ω]		typ [s]	max [s]	
32.768kHz	SMD	MC-306	9	9	Open	330k	2.7 to 5.5	1.4	4.0	Applicable CL value = 7.0pF

■SEIKO INSTRUMENTS

Nominal Frequency	Type	Oscillator Name	Circuit Constant				Operating Voltage Range [V]	Oscillation Stabilization Time		Remarks
			C1 [pF]	C2 [pF]	Rf [Ω]	Rd [Ω]		typ [s]	max [s]	
32.768kHz	SMD	SSP-T7-F	22	22	Open	0	2.7 to 5.5	0.75	2.0	Applicable CL value = 12.5pF

The oscillation stabilization time refers to the time interval that is required for the oscillation to get stabilized after V_{DD} goes above the operating voltage lower limit (see Figure 3).

- The time interval that is required for the oscillation to get stabilized after the instruction for starting the subclock oscillation circuit is executed.
- The time interval that is required for the oscillation to get stabilized after the Hold mode, under the state which the subclock oscillation is enabled, is reset and oscillation is started.

(Notes on the implementation of the oscillator circuit)

- Oscillation is influenced by the circuit pattern layout of printed circuit board. Place the oscillation-related components as close to the CPU chip and to each other as possible with the shortest possible pattern length.
- Keep the signal lines whose state changes suddenly or in which large current flows as far away from the oscillator circuit as possible and make sure that they do not cross one another.
- Be sure to insert a current limiting resistor (Rd) so that the oscillation amplitude never exceeds the input voltage level that is specified as the absolute maximum rating.
- The oscillator circuit constants shown above are sample characteristic values that are measured using the Our designated oscillation evaluation board. Since the accuracy of the oscillation frequency and other characteristics vary according to the board on which the IC is installed, it is recommended that the user consult the resonator vendor for oscillation evaluation of the IC on a user's production board when using the IC for applications that require high oscillation accuracy. For further information, contact your resonator vendor or Our company Semiconductor sales representative serving your locality.
- It must be noted, when replacing the flash ROM version of a microcontroller with a mask ROM version, that their operating voltage ranges may differ even when the oscillation constant of the external oscillator is the same.

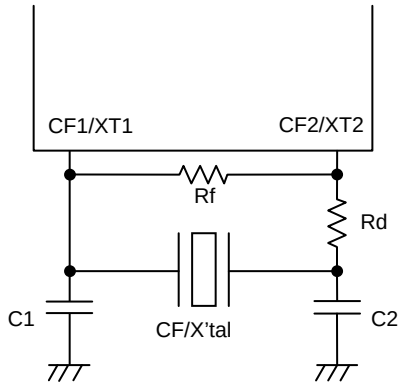

Figure 1 CF and XT Oscillator Circuit

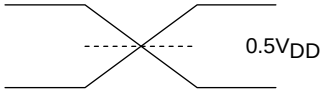

Figure 2 AC Timing Measurement Point

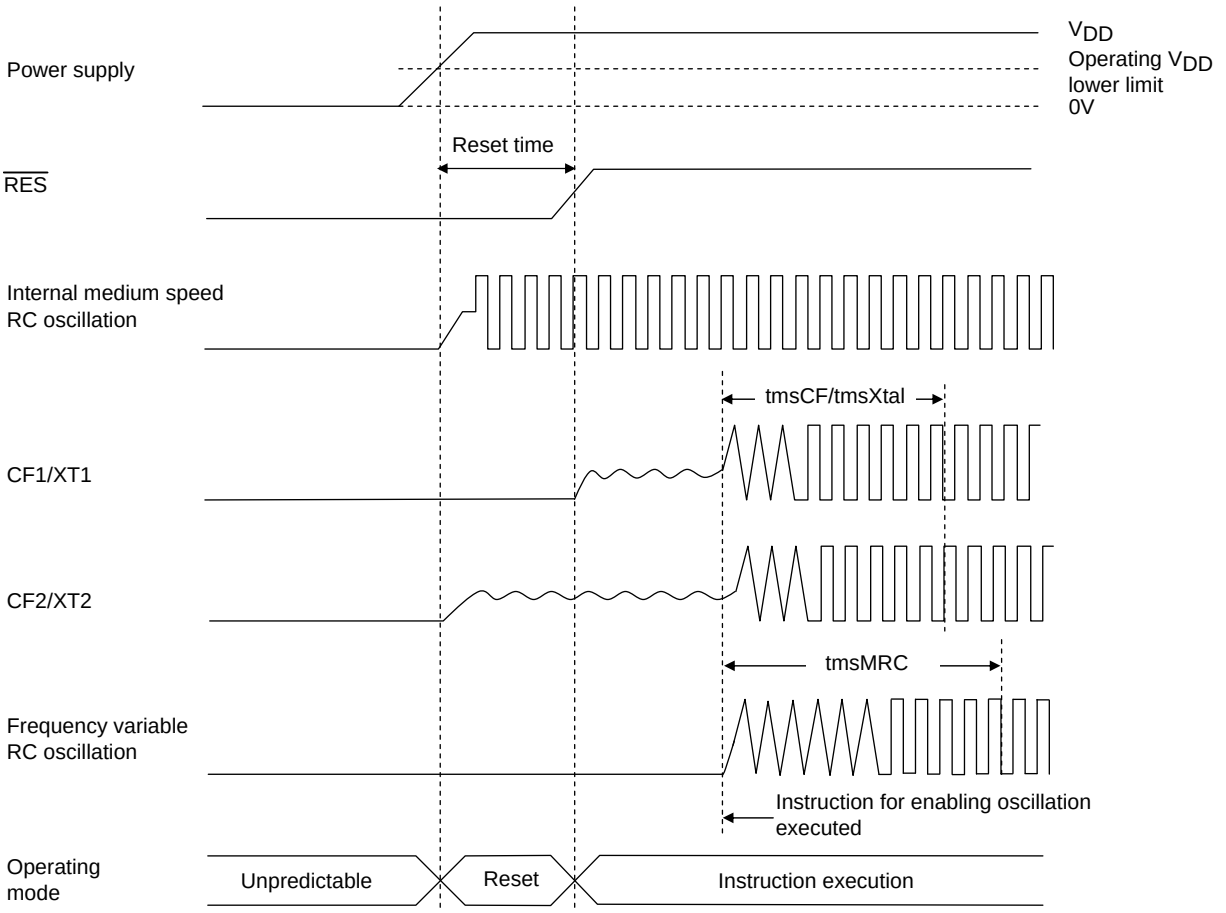

Reset Time and Oscillation Stabilization Time

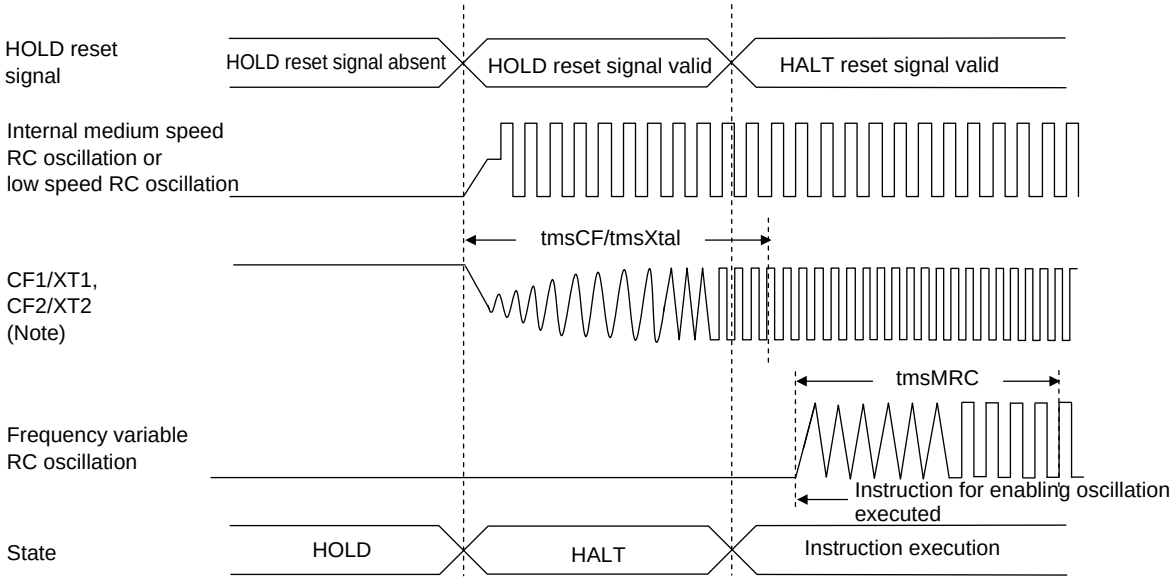

HOLD Reset Signal and Oscillation Stabilization Time

Note: External oscillation circuit is selected.

Figure 3 Oscillation Stabilization Times

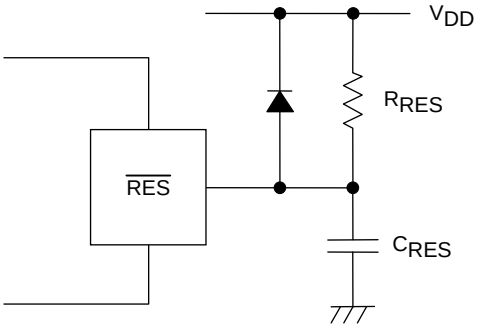

Note:
External circuits for reset may vary depending on the usage of POR and LVD. Please refer to the user's manual for more information.

Figure 4 Reset Circuit

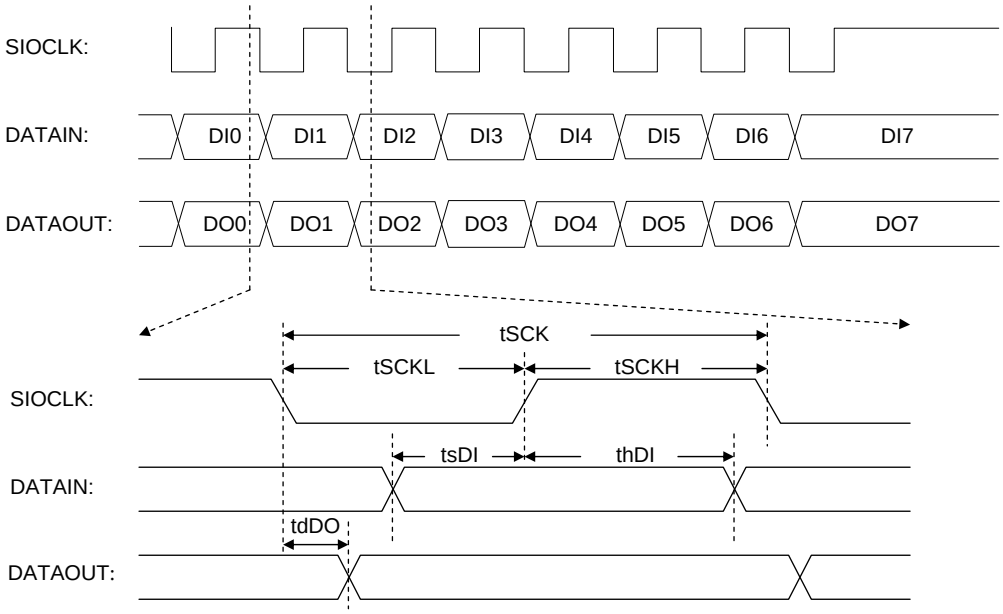

Figure 5 Serial I/O Output Waveforms

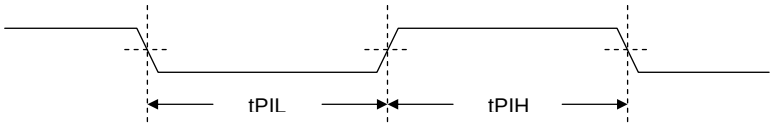

Figure 6 Pulse Input Timing Signal Waveform

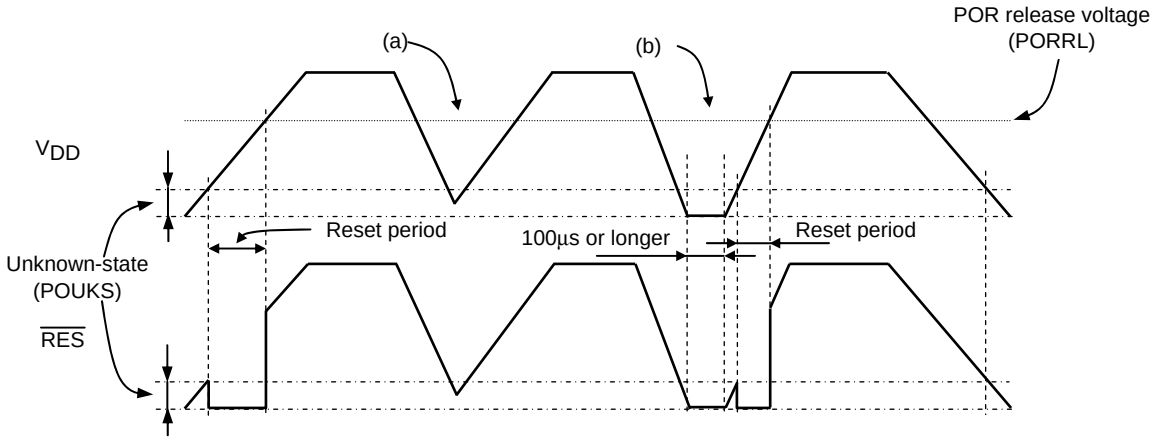

Figure 7 Waveform observed when only POR is used (LVD not used)
(RESET pin: Pull-up resistor R_{RES} only)

- The POR function generates a reset only when power is turned on starting at the V_{SS} level.
- No stable reset will be generated if power is turned on again when the power level does not go down to the V_{SS} level as shown in (a). If such a case is anticipated, use the LVD function together with the POR function or implement an external reset circuit.
- A reset is generated only when the power level goes down to the V_{SS} level as shown in (b) and power is turned on again after this condition continues for 100µs or longer.

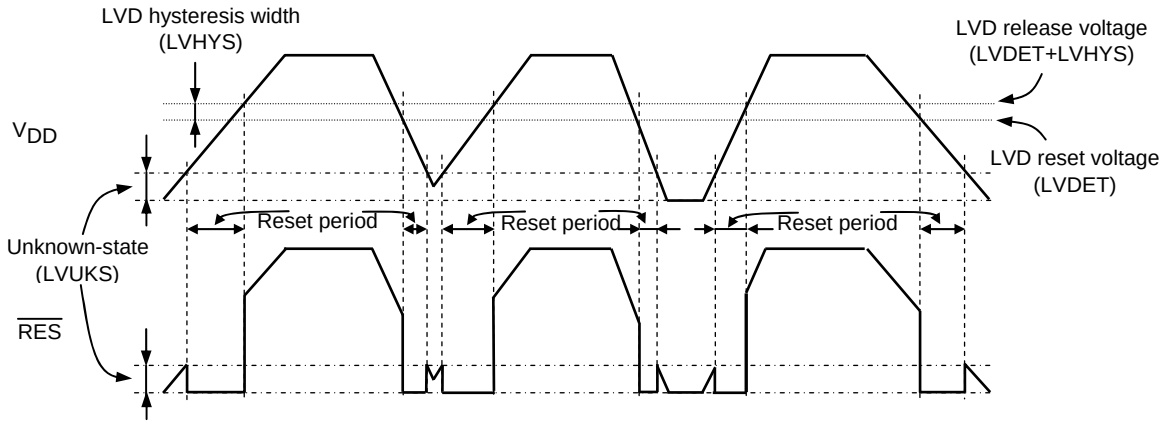

Figure 8 Waveform observed when both POR and LVD functions are used
(RESET pin: Pull-up resistor R_{RES} only)

- Resets are generated both when power is turned on and when the power level lowers.
- A hysteresis width (LVHYS) is provided to prevent the repetitions of reset release and entry cycles near the detection level.

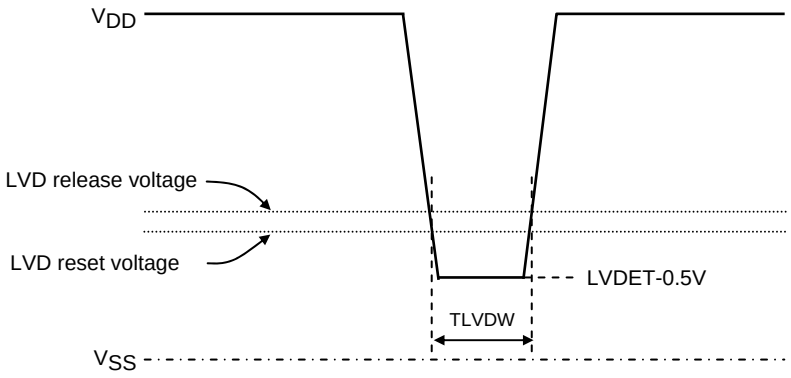

Figure 9 Low voltage detection minimum width
(Example of momentary power loss/Voltage variation waveform)

ON Semiconductor and the ON logo are registered trademarks of Semiconductor Components Industries, LLC (SCILLC). SCILLC owns the rights to a number of patents, trademarks, copyrights, trade secrets, and other intellectual property. A listing of SCILLC's product/patent coverage may be accessed at www.onsemi.com/site/pdf/Patent-Marking.pdf. SCILLC reserves the right to make changes without further notice to any products herein. SCILLC makes no warranty, representation or guarantee regarding the suitability of its products for any particular purpose, nor does SCILLC assume any liability arising out of the application or use of any product or circuit, and specifically disclaims any and all liability, including without limitation special, consequential or incidental damages. "Typical" parameters which may be provided in SCILLC data sheets and/or specifications can and do vary in different applications and actual performance may vary over time. All operating parameters, including "Typicals" must be validated for each customer application by customer's technical experts. SCILLC does not convey any license under its patent rights nor the rights of others. SCILLC products are not designed, intended, or authorized for use as components in systems intended for surgical implant into the body, or other applications intended to support or sustain life, or for any other application in which the failure of the SCILLC product could create a situation where personal injury or death may occur. Should Buyer purchase or use SCILLC products for any such unintended or unauthorized application, Buyer shall indemnify and hold SCILLC and its officers, employees, subsidiaries, affiliates, and distributors harmless against all claims, costs, damages, and expenses, and reasonable attorney fees arising out of, directly or indirectly, any claim of personal injury or death associated with such unintended or unauthorized use, even if such claim alleges that SCILLC was negligent regarding the design or manufacture of the part. SCILLC is an Equal Opportunity/Affirmative Action Employer. This literature is subject to all applicable copyright laws and is not for resale in any manner.