Ordering number : ENA0929

LC87F5NC8A

CMOS IC
FROM 128K byte, RAM 4096 byte on-chip
8-bit 1-chip Microcontroller

ON Semiconductor®
http://onsemi.com

Overview

The LC87F5NC8A is an 8-bit microcomputer that, centered around a CPU running at a minimum bus cycle time of 83.3ns, integrate on a single chip a number of hardware features such as 128K-byte flash ROM (onboard rewritable), 4096byte RAM, Onchip debugging function, sophisticated 16-bit timers/counters (may be divided into 8-bit timers), a 16-bit timer/counter (may be divided into 8-bit timers/counters or 8-bit PWMs), four 8-bit timers with a prescaler, a base timer serving as a time-of-day clock, a high-speed clock counter, two synchronous SIO ports (with automatic block transmission/reception capabilities), an asynchronous/synchronous SIO port, two UART ports (full duplex), four 12-bit PWM channels, an 8-bit 15-channel AD converter, a system clock frequency divider, and a 29-source 10-vector interrupt feature.

Features

■Flash ROM
- Capable of on-board-programing with wide range, 2.7 to 5.5V, of voltage source
- Block-erase in 128 byte units
- 131072 × 8 bits

■RAM
- 4096 × 9 bits

■Minimum Bus Cycle Time
- 83.3ns (12MHz) V_{DD}=2.8 to 5.5V
- 125ns (8MHz) V_{DD}=2.5 to 5.5V
- 500ns (2MHz) V_{DD}=2.2 to 5.5V

Note: Bus cycle time indicates the speed to read ROM.

■Minimum Instruction Cycle Time (tCYC)
- 250ns (12MHz) V_{DD}=2.8 to 5.5V
- 375ns (8MHz) V_{DD}=2.5 to 5.5V
- 1.5μs (2MHz) V_{DD}=2.2 to 5.5V

■Ports
- Normal withstand voltage I/O ports
  - Ports whose I/O direction can be designated in 1-bit units: 64 (P1n, P2n, P3n, P70 to P73, P8n, PAn, PBn, PCn, S2Pn, PWM0, PWM1, XT2)
  - Ports whose I/O direction can be designated in 2-bit units: 16 (PEn, PFn)
  - Ports whose I/O direction can be designated in 4-bit units: 8 (P0n)
- Normal withstand voltage input port: 1 (XT1)
- Dedicated oscillator ports: 2 (CF1, CF2)
- Reset pins: 1 (RES)
- Power pins: 6 (V_{SS}1 to 4, V_{DD}1 to 4)

* This product is licensed from Silicon Storage Technology, Inc. (USA).

Semiconductor Components Industries, LLC, 2013

■Timers

- Timer 0: 16-bit timer/counter with a capture register
  - Mode 0: 8-bit timer with an 8-bit programmable prescaler (with an 8-bit capture register) ×2 channels
  - Mode 1: 8-bit timer with an 8-bit programmable prescaler (with an 8-bit capture register) + 8-bit counter (with an 8-bit capture register)
  - Mode 2: 16-bit timer with an 8-bit programmable prescaler (with a 16-bit capture register)
  - Mode 3: 16-bit counter (with a 16-bit capture register)
- Timer 1: 16-bit timer/counter that supports PWM/toggle output
  - Mode 0: 8-bit timer with an 8-bit prescaler (with toggle outputs) + 8-bit timer/counter(with toggle outputs)
  - Mode 1: 8-bit PWM with an 8-bit prescaler × 2 channels
  - Mode 2: 16-bit timer/counter with an 8-bit prescaler (with toggle outputs) (toggle outputs also from the lower-order 8-bits)
  - Mode 3: 16-bit timer with an 8-bit prescaler (with toggle outputs) (The lower-order 8 bits can be used as PWM.)
- Timer 4: 8-bit timer with a 6-bit prescaler
- Timer 5: 8-bit timer with a 6-bit prescaler
- Timer 6: 8-bit timer with a 6-bit prescaler (with toggle outputs)
- Timer 7: 8-bit timer with a 6-bit prescaler (with toggle outputs)
- Base timer
  1) The clock is selectable from the subclock (32.768kHz crystal oscillation), system clock, and timer 0 prescaler output.
  2) Interrupts programmable in 5 different time schemes.

■High-speed Clock Counter

1) Can count clocks with a maximum clock rate of 24MHz (at a main clock of 12MHz).
2) Can generate output real-time.

■SIO

- SIO0: 8-bit synchronous serial interface
  1) LSB first/MSB first mode selectable
  2) Built-in 8-bit baudrate generator (maximum transfer clock cycle = 4/3 tCYC)
  3) Automatic continuous data transmission (1 to 256 bits, specifiable in 1 bit units, suspension and resumption of data transmission possible in 1 byte units)
- SIO1: 8-bit asynchronous/synchronous serial interface
  - Mode 0: Synchronous 8-bit serial I/O (2- or 3-wire configuration, 2 to 512 tCYC transfer clocks)
  - Mode 1: Asynchronous serial I/O (half-duplex, 8 data bits, 1 stop bit, 8 to 2048 tCYC baudrates)
  - Mode 2: Bus mode 1 (start bit, 8 data bits, 2 to 512 tCYC transfer clocks)
  - Mode 3: Bus mode 2 (start detect, 8 data bits, stop detect)
- SIO2: 8 bit synchronous serial interface
  1) LSB first mode
  2) Built-in 8-bit baudrate generator (maximum transfer clock cycle = 4/3 tCYC)
  3) Automatic continuous data transmission (1 to 32 bytes)

■UART: 2 channels

- Full duplex
- 7/8/9 bit data bits selectable
- 1 stop bit (2 bit in continuous transmission mode)
- Built-in baudrate generator (with baudrates of 16/3 to 8192/3 tCYC)

■AD Converter: 8 bits × 15 channels

■PWM: Multifrequency 12-bit PWM × 4 channels

■Remote Control Receiver Circuit (sharing pins with P73, INT3, and T0IN)

1) Noise filtering function (noise filter time constant selectable from 1 tCYC, 32 tCYC, and 128 tCYC)
2) The noise filtering function is available for the INT3, T0IN, or T0HCP signal at P73. When P73 is read with an instruction, the signal level at that pin is read regardless of the availability of the noise filtering function.

■Watchdog Timer
- External RC watchdog timer
- Interrupt and reset signals selectable

■Clock Output Function
1) Able to output selected oscillation clock 1/1, 1/2, 1/4, 1/8, 1/16, 1/32, 1/64 as system clock.
2) Able to output oscillation clock of sub clock.

■Interrupts
- 29 sources, 10 vector addresses
  1) Provides three levels (low (L), high (H), and highest (X)) of multiplex interrupt control. Any interrupt requests of the level equal to or lower than the current interrupt are not accepted.
  2) When interrupt requests to two or more vector addresses occur at the same time, the interrupt of the highest level takes precedence over the other interrupts. For interrupts of the same level, the interrupt into the smallest vector address takes precedence.

No.	Vector Address	Level	Interrupt Source
1	00003H	X or L	INT0
2	0000BH	X or L	INT1
3	00013H	H or L	INT2/T0L/INT4
4	0001BH	H or L	INT3/INT5/base timer0/base timer1
5	00023H	H or L	T0H/INT6
6	0002BH	H or L	T1L/T1H/INT7
7	00033H	H or L	SIO0/UART1 receive/UART2 receive
8	0003BH	H or L	SIO/UART1 transmit/UART2 transmit
9	00043H	H or L	ADC/T6/T7/PWM4, PWM5
10	0004BH	H or L	Port 0/T4/T5/PWM2, PWM3

- Priority levels X > H > L
- Of interrupts of the same level, the one with the smallest vector address takes precedence.

■Subroutine Stack Levels: 2048 levels maximum (the stack is allocated in RAM)

■High-speed Multiplication/Division Instructions
- 16-bits × 8-bits (5 tCYC execution time)
- 24-bits × 16-bits (12 tCYC execution time)
- 16-bits ÷ 8-bits (8 tCYC execution time)
- 24-bits ÷ 16-bits (12 tCYC execution time)

■Oscillation Circuits
- RC oscillation circuit (internal) : For system clock
- CF oscillation circuit : For system clock, with internal Rf
- Crystal oscillation circuit : For low-speed system clock
- Multifrequency RC oscillation circuit (internal) : For system clock

■System Clock Divider Function
- Can run on low current.
- The minimum instruction cycle selectable from 250ns, 500ns, 1.0μs, 2.0μs, 4.0μs, 8.0μs, 16.0μs, 32.0μs, and 64.0μs (at a main clock rate of 12MHz).

■Standby Function

- HALT mode: Halts instruction execution while allowing the peripheral circuits to continue operation.
  1) Oscillation is not halted automatically.
  2) Canceled by a system reset or occurrence of interrupt.
- HOLD mode: Suspends instruction execution and the operation of the peripheral circuits.
  1) The CF, RC, and crystal oscillators automatically stop operation.
  2) There are three ways of resetting the HOLD mode.
     (1) Setting the reset pin to the low level.
     (2) Setting at least one of the INT0, INT1, INT2, INT4, and INT5 pins to the specified level
     (3) Having an interrupt source established at port 0
- X'tal HOLD mode: Suspends instruction execution and the operation of the peripheral circuits except the base timer.
  1) The CF and RC oscillators automatically stop operation.
  2) The state of crystal oscillation established when the X'tal HOLD mode is entered is retained.
  3) There are four ways of resetting the X'tal HOLD mode.
     (1) Setting the reset pin to the low level
     (2) Setting at least one of the INT0, INT1, INT2, INT4, and INT5 pins to the specified level
     (3) Having an interrupt source established at port 0
     (4) Having an interrupt source established in the base timer circuit

■On-chip Debugger Function

- Permits software debugging with the test device installed on the target board.

■Package Form

- QIP100E (14 × 20) : “Lead-free type”

■Development Tools

- Evaluation (EVA) chip : LC87EV690
- Emulator : EVA62S + ECB876600D + SUB875C00 + POD100QFP
  ICE-B877300 + SUB875C00 + POD100QFP
- On-chip-debugger : TCB87-TypeB + LC87F5NC8A

■Programming Boards

Package	Programming boards
QIP100E (14 × 20)	W87F52256Q

■Flash ROM Programmer

Maker	Model	Support version(Note)	Device
Flash Support Group, Inc. (Single)	AF9708/09/09B (including product of Ando Electric Co.,Ltd)	Revision : After Rev.02.73	LC87F76C8A
Flash Support Group, Inc.(Gang)	AF9723(Main body) (including product of Ando Electric Co.,Ltd)	Revision : After Rev.02.29	LC87F5NC8A
	AF9833(Unit) (including product of Ando Electric Co.,Ltd)	Revision : After Rev.01.88	
Our company	SKK/SKK Type-B/SKK DBG Type-B (SANYO FWS)	Application Version: After 1.04 Chip Data Version: After2.10	LC87F5NC8A

Package Dimensions

unit : mm (typ)
3151A

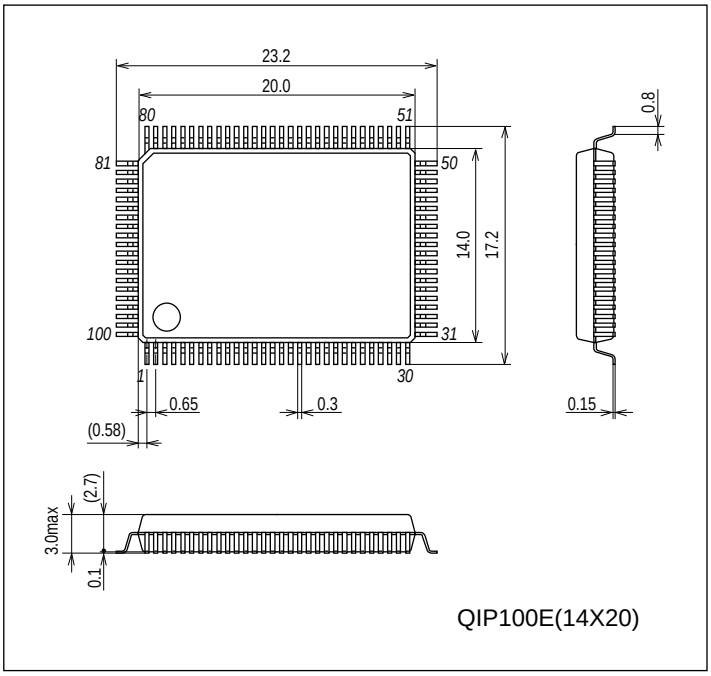

Pin Assignment

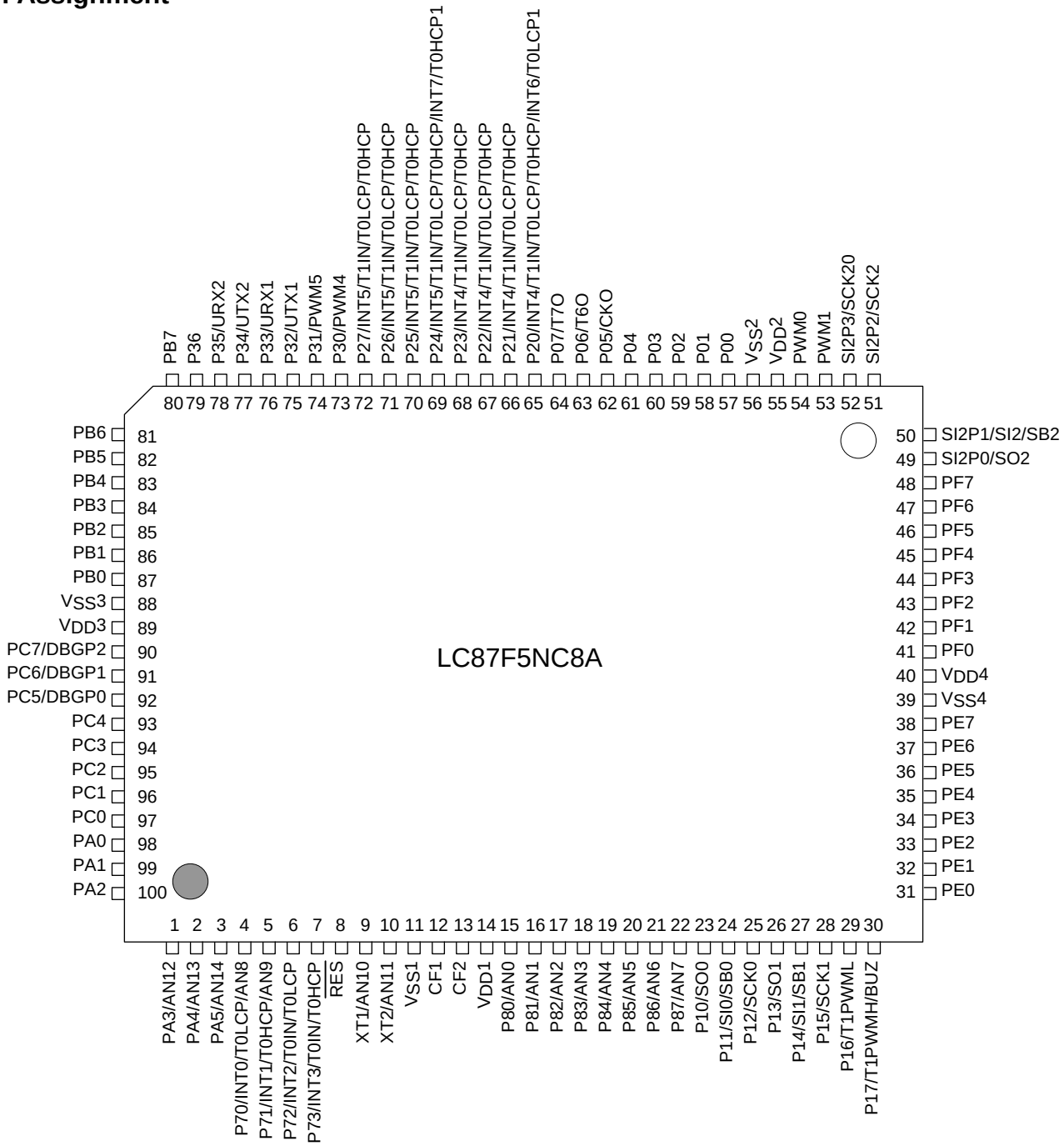

Top view

QIP100E(14×20) “Lead-free Type”

System Block Diagram

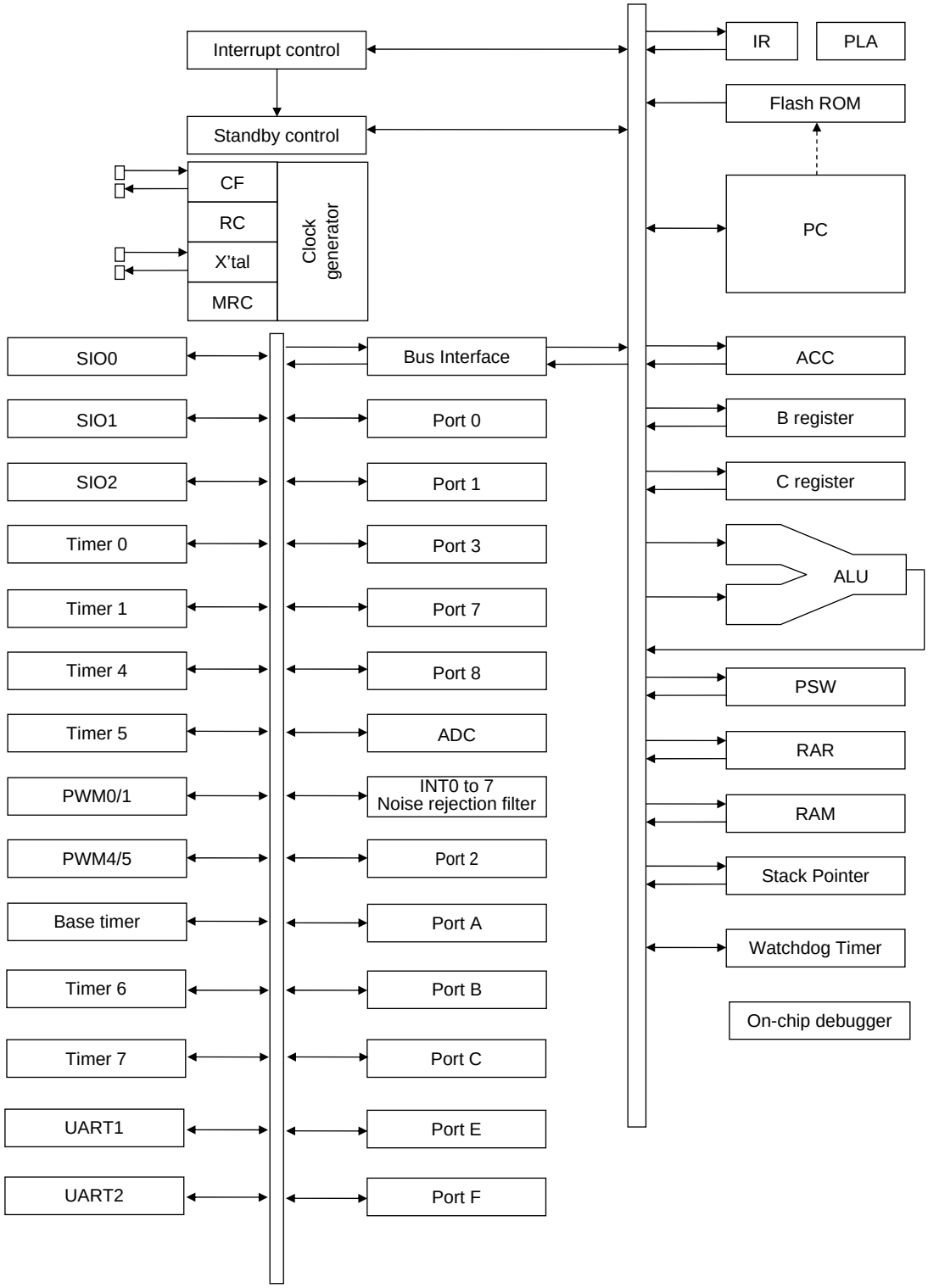

Pin Description

<table>
<tr><th>Pin Name</th><th>I/O</th><th>Description</th><th>Option</th></tr>
<tr><td>$V_{SS}1$, $V_{SS}2$
$V_{SS}3$, $V_{SS}4$</td><td>-</td><td>- Power supply pin</td><td>No</td></tr>
<tr><td>$V_{DD}1$, $V_{DD}2$
$V_{DD}3$, $V_{DD}4$</td><td>-</td><td>+ Power supply pin</td><td>No</td></tr>
<tr><td>Port 0
P00 to P07</td><td>I/O</td><td>• 8-bit I/O port
• I/O specifiable in 4-bit units
• Pull-up resistor can be turned on and off in 4-bit units
• HOLD release input
• Port 0 interrupt input
• Pin functions
P05: System clock output
P06: Timer 6 toggle output
P07: Timer 7 toggle output</td><td>Yes</td></tr>
<tr><td>Port 1
P10 to P17</td><td>I/O</td><td>• 8-bit I/O port
• I/O specifiable in 1-bit units
• Pull-up resistor can be turned on and off in 1-bit units
• Pin functions
P10: SIO0 data output
P11: SIO0 data input, bus I/O
P12: SIO0 clock I/O
P13: SIO1 data output
P14: SIO1 data input, bus I/O
P15: SIO1 clock I/O
P16: Timer 1 PWML output
P17: Timer 1 PWMH output, Beeper output</td><td>Yes</td></tr>
<tr><td>Port 2
P20 to P27</td><td>I/O</td><td>• 8-bit I/O port
• I/O specifiable in 1-bit units
• Pull-up resistor can be turned on and off in 1-bit units
• Other functions
P20: INT4 input/HOLD reset input/timer 1 event input/timer 0L capture input/
timer 0H capture input/INT6 input/timer 0L capture 1 input
P21 to P23: INT4 input/HOLD reset input/timer 1 event input/timer 0L capture input/
timer 0H capture input
P24: INT5 input/HOLD reset input/timer 1 event input/timer 0L capture input/
timer 0H capture input/INT7 input/timer 0H capture 1 input
P25 to P27: INT5 input/HOLD reset input/timer 1 event input/timer 0L capture input/
timer 0H capture input
• Interrupt acknowledge type
<table>
<tr><th></th><th>Rising</th><th>Falling</th><th>Rising/
Falling</th><th>H level</th><th>L level</th></tr>
<tr><td>INT4</td><td>enable</td><td>enable</td><td>enable</td><td>disable</td><td>disable</td></tr>
<tr><td>INT5</td><td>enable</td><td>enable</td><td>enable</td><td>disable</td><td>disable</td></tr>
<tr><td>INT6</td><td>enable</td><td>enable</td><td>enable</td><td>disable</td><td>disable</td></tr>
<tr><td>INT7</td><td>enable</td><td>enable</td><td>enable</td><td>disable</td><td>disable</td></tr>
</table></td><td>Yes</td></tr>
<tr><td>Port 3
P30 to P36</td><td>I/O</td><td>• 7-bit I/O port
• I/O specifiable in 1-bit units
• Pull-up resistor can be turned on and off in 1-bit units
• Pin functions
P30: PWM4 output
P31: PWM5 output
P32: UART1 transmit
P33: UART1 receive
P34: UART2 transmit
P35: UART2 receive</td><td>Yes</td></tr>
</table>

Continued on next page.

Continued from preceding page.

<table>
<tr><th>Pin Name</th><th>I/O</th><th>Description</th><th>Option</th></tr>
<tr><td>Port 7
P70 to P73</td><td>I/O</td><td>• 4-bit I/O port
• I/O specifiable in 1-bit units
• Pull-up resistor can be turned on and off in 1-bit units
• Other functions
P70: INT0 input/HOLD release input/Timer 0L capture input/Output for watchdog timer
P71: INT1 input/HOLD release input/Timer 0H capture input
P72: INT2 input/HOLD release input/Timer 0 event input/Timer 0L capture input
P73: INT3 input with noise filter/Timer 0 event input/Timer 0H capture input
• Interrupt acknowledge type
<table>
<tr><th></th><th>Rising</th><th>Falling</th><th>Rising/
Falling</th><th>H level</th><th>L level</th></tr>
<tr><td>INT0</td><td>enable</td><td>enable</td><td>disable</td><td>enable</td><td>enable</td></tr>
<tr><td>INT1</td><td>enable</td><td>enable</td><td>disable</td><td>enable</td><td>enable</td></tr>
<tr><td>INT2</td><td>enable</td><td>enable</td><td>enable</td><td>disable</td><td>disable</td></tr>
<tr><td>INT3</td><td>enable</td><td>enable</td><td>enable</td><td>disable</td><td>disable</td></tr>
</table>
• AD converter input port: AN8 (P70), AN9 (P71)</td><td>No</td></tr>
<tr><td>Port 8
P80 to P87</td><td>I/O</td><td>• 8-bit I/O port
• I/O specifiable in 1-bit units
• Other functions
P80 to P87: AD converter input port</td><td>No</td></tr>
<tr><td>Port A
PA0 to PA5</td><td>I/O</td><td>• 6-bit I/O port
• I/O specifiable in 1-bit units
• Pull-up resistor can be turned on and off in 1-bit units</td><td>Yes</td></tr>
<tr><td>Port B
PB0 to PB7</td><td>I/O</td><td>• 8-bit I/O port
• I/O specifiable in 1-bit units
• Pull-up resistor can be turned on and off in 1-bit units</td><td>Yes</td></tr>
<tr><td>Port C
PC0 to PC7</td><td>I/O</td><td>• 8-bit I/O port
• I/O specifiable in 1-bit units
• Pull-up resistor can be turned on and off in 1-bit units
• Pin functions
DBGP0 to DBGP2 (PC5 to PC7): On-chip Debugger</td><td>Yes</td></tr>
<tr><td>Port E
PE0 to PE7</td><td>I/O</td><td>• 8-bit I/O port
• I/O specifiable in 2-bit units
• Pull-up resistor can be turned on and off in 1-bit units</td><td>No</td></tr>
<tr><td>Port F
PF0 to PF7</td><td>I/O</td><td>• 8-bit I/O port
• I/O specifiable in 2-bit units
• Pull-up resistor can be turned on and off in 1-bit units</td><td>No</td></tr>
<tr><td>SIO2 Port
SI2P0 to SI2P3</td><td>I/O</td><td>• 4-bit I/O port
• I/O specifiable in 1-bit units
• Shared functions:
SI2P0: SIO2 data output
SI2P1: SIO2 data input, bus input/output
SI2P2: SIO2 clock input/output
SI2P3: SIO2 clock output</td><td>No</td></tr>
<tr><td>PWM0, PWM1</td><td>O</td><td>• PWM0, PWM1 output port
• General-purpose I/O available</td><td>No</td></tr>
<tr><td>$\overline{\text{RES}}$</td><td>I</td><td>Reset pin</td><td>No</td></tr>
<tr><td>XT1</td><td>I</td><td>• Input terminal for 32.768kHz X'tal oscillation
• Shared functions:
AN10: AD converter input port
General-purpose input port
Must be connected to $V_{DD}1$ if not to be used.</td><td>No</td></tr>
<tr><td>XT2</td><td>I/O</td><td>• Output terminal for 32.768kHz X'tal oscillation
• Shared functions:
AN11: AD converter input port
General-purpose I/O port
Must be set for oscillation and kept open if not to be used.</td><td>No</td></tr>
<tr><td>CF1</td><td>I</td><td>Ceramic resonator input pin</td><td>No</td></tr>
<tr><td>CF2</td><td>O</td><td>Ceramic resonator output pin</td><td>No</td></tr>
</table>

Port Output Types

The table below lists the types of port outputs and the presence/absence of a pull-up resistor.
Data can be read into any input port even if it is in the output mode.

Port	Options Selected in Units of	Option Type	Output Type	Pull-up Resistor
P00 to P07	1 bit	1	CMOS	Programmable (Note 1)
		2	N-channel open drain	No
P10 to P17	1 bit	1	CMOS	Programmable
		2	N-channel open drain	Programmable
P20 to P27	1 bit	1	CMOS	Programmable
		2	N-channel open drain	Programmable
P30 to P36	1 bit	1	CMOS	Programmable
		2	N-channel open drain	Programmable
P70	-	No	N-channel open drain	Programmable
P71 to P73	-	No	CMOS	Programmable
P80 to P87	-	No	N-channel open drain	No
PA0 to PA5	1 bit	1	CMOS	Programmable
		2	N-channel open drain	Programmable
PB0 to PB7	1 bit	1	CMOS	Programmable
		2	N-channel open drain	Programmable
PC0 to PC7	1 bit	1	CMOS	Programmable
		2	N-channel open drain	Programmable
PE0 to PE7	-	No	CMOS	Programmable
PF0 to PF7	-	No	CMOS	Programmable
SI2P0, SI2P2 SI2P3	-	No	CMOS	No
SI2P1	-	No	CMOS (when selected as ordinary port) N-channel open drain (When SIO2 data is selected)	No
PWM0, PWM1	-	No	CMOS	No
XT1	-	No	Input only	No
XT2	-	No	Output for 32.768kHz quartz oscillator N-channel open drain (when in general-purpose No output mode)	No

Note 1: Programmable pull-up resistors for port 0 are controlled in 4-bit units (P00 to 03, P04 to 07).

*1: Make the following connection to minimize the noise input to the $V_{DD}1$ pin and prolong the backup time.
Be sure to electrically short the $V_{SS}1$, $V_{SS}2$, $V_{SS}3$ and $V_{SS}4$ pins.

(Example 1) When backup is active in the HOLD mode, the high level of the port outputs is supplied by the backup capacitors.

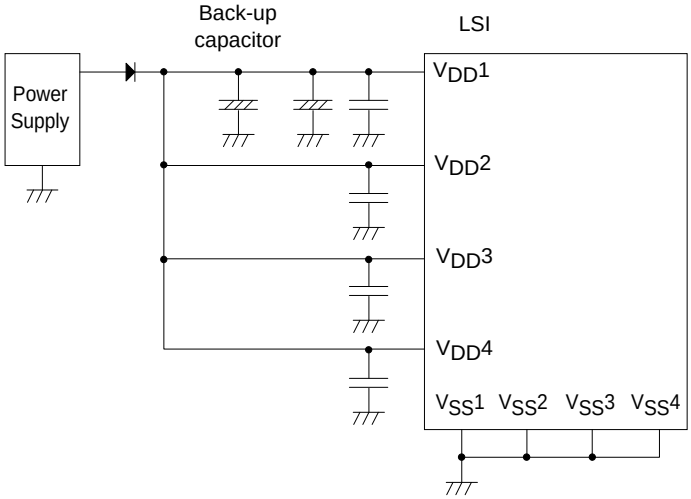

(Example 2) The high-level output at the ports is unstable when the HOLD mode backup is in effect.

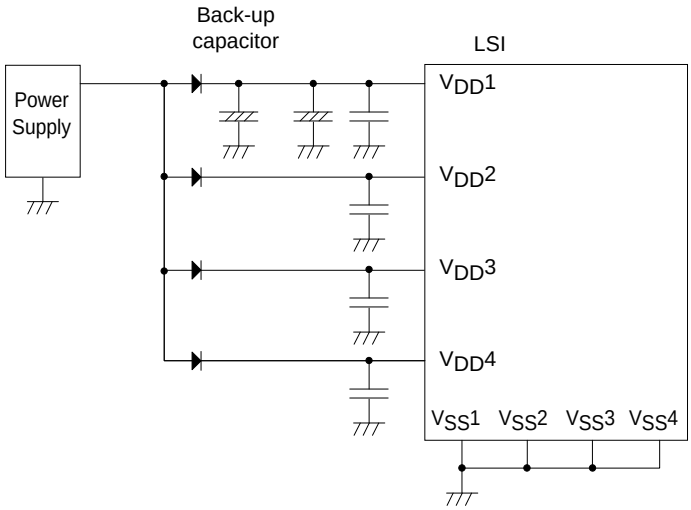

Absolute Maximum Ratings at Ta = 25°C, $V_{SS}1 = V_{SS}2 = V_{SS}3 = V_{SS}4 = 0V$

Parameter		Symbol	Pins/Remarks	Conditions		Specification			
					V_{DD}[V]	min	typ	max	unit
Maximum Supply voltage		V_{DD} max	$V_{DD}1$, $V_{DD}2$, $V_{DD}3$, $V_{DD}4$	$V_{DD}1=V_{DD}2=V_{DD}3=V_{DD}4$		-0.3		+6.5	V
Input voltage		V_I(1)	XT1, CF1			-0.3		V_{DD}+0.3	
Input/Output Voltage		V_{IO}(1)	Ports 0, 1, 2 Ports 3, 7, 8 Ports A, B, C, E, F SI2P0 to SI2P3 PWM0, PWM1,XT2			-0.3		V_{DD}+0.3	
High level output current	Peak output current	IOPH(1)	Ports 0, 1, 2, 3 Ports A, B, C, E, F SI2P0 to SI2P3	CMOS output select per 1 application pin		-10			mA
		IOPH(2)	PWM0, PWM1	Per 1 application pin.		-20			
		IOPH(3)	P71 to P73	Per 1 application pin.		-5			
	Average output current (Note1-1)	IOM(1)	Ports 0, 1, 2, 3 Ports A, B, C, E, F SI2P0 to SI2P3	CMOS output select per 1 application pin		-7.5			
		IOM(2)	PWM0, PWM1	Per 1 application pin.		-10			
		IOM(3)	P71 to P73	Per 1 application pin.		-3			
	Total output current	ΣIOAH(1)	P71 to P73	Total of all applicable pins		-10			
		ΣIOAH(2)	PWM0, PWM1 SI2P0 to SI2P3	Total of all applicable pins		-25			
		ΣIOAH(3)	Port 0	Total of all applicable pins		-25			
		ΣIOAH(4)	Port 0 PWM0, PWM1 SI2P0 to SI2P3	Total of all applicable pins		-45			
		ΣIOAH(5)	Ports 2, 3, B	Total of all applicable pins		-25			
		ΣIOAH(6)	Ports A, C	Total of all applicable pins		-25			
		ΣIOAH(7)	Ports 2, 3, A, B, C	Total of all applicable pins		-45			
		ΣIOAH(8)	Port F	Total of all applicable pins		-25			
		ΣIOAH(9)	Ports 1, E	Total of all applicable pins		-25			
		ΣIOAH(10)	Ports 1, E, F	Total of all applicable pins		-45			

Note 1-1: Average output current is average of current in 100ms interval.

Continued on next page.

Continued from preceding page.

Parameter		Symbol	Pins/Remarks	Conditions	Specification				
					V_{DD}[V]	min	typ	max	unit
Low level output current	Peak output current	IOPL(1)	P02 to P07 Ports 1, 2, 3 Ports A, B, C, E, F SI2P0 to SI2P3 PWM0, PWM1	Per 1 application pin.				20	mA
		IOPL(2)	P00, P01	Per 1 application pin.				30	
		IOPL(3)	Ports 7, 8, XT2	Per 1 application pin.				10	
	Average output current (Note1-1)	IOML(1)	P02 to P07 Ports 1, 2, 3 Ports A, B, C, E, F SI2P0 to SI2P3 PWM0, PWM1	Per 1 application pin.				15	
		IOML(2)	P00, P01	Per 1 application pin.				20	
		IOML(3)	Ports 7, 8, XT2	Per 1 application pin.				7.5	
	Total output current	ΣIOAL(1)	Port 7, XT2	Total of all applicable pins				15	
		ΣIOAL(2)	Port 8	Total of all applicable pins				15	
		ΣIOAL(3)	Ports 7, 8, XT2	Total of all applicable pins				20	
		ΣIOAL(4)	PWM0, PWM1 SI2P0 to SI2P3	Total of all applicable pins				45	
		ΣIOAL(5)	Port 0	Total of all applicable pins				45	
		ΣIOAL(6)	Port 0 PWM0, PWM1 SI2P0 to SI2P3	Total of all applicable pins				80	
		ΣIOAL(7)	Ports 2, 3, B	Total of all applicable pins				45	
		ΣIOAL(8)	Ports A, C	Total of all applicable pins				45	
		ΣIOAL(9)	Ports 2, 3, A, B, C	Total of all applicable pins				80	
		ΣIOAL(10)	Port F	Total of all applicable pins				45	
		ΣIOAL(11)	Ports 1, E	Total of all applicable pins				45	
		ΣIOAL(12)	Ports 1, E, F	Total of all applicable pins				80	
Maximum power dissipation		Pd max	QIP100E(14×20)	Ta=-40 to +85°C				320	mW
Operating ambient temperature		Topr				-40		+85	°C
Storage ambient temperature		Tstg				-55		+125	

Note 1-1: Average output current is average of current in 100ms interval.

Stresses exceeding Maximum Ratings may damage the device. Maximum Ratings are stress ratings only. Functional operation above the Recommended Operating Conditions is not implied. Extended exposure to stresses above the Recommended Operating Conditions may affect device reliability.

Recommended Operating Conditions at Ta = -40°C to +85°C, $V_{SS}1 = V_{SS}2 = V_{SS}3 = V_{SS}4 = 0V$

Parameter	Symbol	Pins/Remarks	Conditions	Specification				
				V_{DD}[V]	min	typ	max	unit
Operating supply voltage (Note2-1)	$V_{DD}(1)$	$V_{DD}1=V_{DD}2=V_{DD}3=V_{DD}4$	0.245µs≤ tCYC≤200µs		2.8		5.5	V
			0.367µs≤ tCYC≤200µs		2.5		5.5	
			1.470µs≤ tCYC≤200µs		2.2		5.5	
Memory sustaining supply voltage	VHD	$V_{DD}1=V_{DD}2=V_{DD}3=V_{DD}4$	RAM and register contents in HOLD mode.		2.0		5.5	
High level input voltage	$V_{IH}(1)$	Ports 1, 2, 3 SI2P0 to SI2P3 P71 to P73 P70 port input/ interrupt side		2.2 to 5.5	$0.3V_{DD}$ +0.7		V_{DD}	
	$V_{IH}(2)$	Ports 0, 8 Ports A, B, C, E, F PWM0, PWM1		2.2 to 5.5	$0.3V_{DD}$ +0.7		V_{DD}	
	$V_{IH}(3)$	P70 Watchdog timer side		2.2 to 5.5	$0.9V_{DD}$		V_{DD}	
	$V_{IH}(4)$	XT1, XT2, CF1, $\overline{RES}$		2.2 to 5.5	$0.75V_{DD}$		V_{DD}	
Low level input voltage	$V_{IL}(1)$	Ports 1, 2, 3 SI2P0 to SI2P3 P71 to P73 P70 port input/ interrupt		4.0 to 5.5	V_{SS}		$0.1V_{DD}$ +0.4	
				2.2 to 4.0	V_{SS}		$0.2V_{DD}$	
	$V_{IL}(2)$	Ports 0, 8 Ports A, B, C, E, F PWM0, PWM1		2.5 to 5.5	V_{SS}		$0.15V_{DD}$ +0.4	
				2.2 to 5.5	V_{SS}		$0.2V_{DD}$	
	$V_{IL}(5)$	Port 70 Watchdog Timer		2.5 to 5.5	V_{SS}		$0.8V_{DD}$ -1.0	
	$V_{IL}(6)$	XT1, XT2, CF1, $\overline{RES}$		2.5 to 5.5	V_{SS}		$0.25V_{DD}$	
Instruction cycle time	tCYC (Note2-2)			2.8 to 5.5	0.245		200	µs
				2.5 to 5.5	0.367		200	
				2.2 to 5.5	1.470		200	
External system clock frequency	FEXCF(1)	CF1	• CF2 pin open • System clock frequency division rate=1/1 • External system clock duty=50±5%	2.8 to 5.5	0.1		12	MHz
				2.5 to 5.5	0.1		8	
				2.2 to 5.5	0.1		2	
			• CF2 pin open • System clock frequency division rate=1/2	2.8 to 5.5	0.2		24.4	
				2.5 to 5.5	0.2		16	
				2.2 to 5.5	0.2		4	
Oscillation frequency Range (Note2-3)	FmCF(1)	CF1, CF2	12MHz ceramic oscillation See Fig. 1.	2.8 to 5.5		12		MHz
	FmCF(2)	CF1, CF2	8MHz ceramic oscillation See Fig. 1.	2.5 to 5.5		8		
	FmCF(3)	CF1, CF2	4MHz ceramic oscillation See Fig. 1.	2.2 to 5.5		4		
	FmRC		Internal RC oscillation	2.5 to 5.5	0.3	1.0	2.0	
	FmMRC		Frequency variable RC oscillation source oscillation	2.5 to 5.5		16		
	FsX'tal	XT1, XT2	32.768kHz crystal oscillation. See Fig. 2.	2.5 to 5.5		32.768		kHz

Note 2-1: V_{DD} must be held greater than or equal to 2.7V in the flash ROM onboard programming mode.

Note 2-2: Relationship between tCYC and oscillation frequency is 3/FmCF at a division ratio of 1/1 and 6/FmCF at a division ratio of 1/2.

Note 2-3: See Tables 1 and 2 for the oscillation constants.

Electrical Characteristics at Ta = -40°C to +85°C, $V_{SS}1 = V_{SS}2 = V_{SS}3 = V_{SS}4 = 0V$

Parameter	Symbol	Pins/Remarks	Conditions	Specification				
				V_{DD}[V]	min	typ	max	unit
High level input current	$I_{IH}(1)$	Ports 0, 1, 2 Ports 3, 7, 8 Ports A, B, C SI2P0 to SI2P3 $\overline{RES}$ PWM0, PWM1	Output disable Pull-up resistor OFF $V_{IN}=V_{DD}$ (including the off-leak current of the output Tr.)	2.2 to 5.5			1	µA
	$I_{IH}(2)$	XT1, XT2	Using as an input port $V_{IN}=V_{DD}$	2.2 to 5.5			1	
	$I_{IH}(3)$	CF1	$V_{IN}=V_{DD}$	2.2 to 5.5			15	
Low level input current	$I_{IL}(1)$	Ports 0, 1, 2 Ports 3, 7, 8 Ports A, B, C, E, F SI2P0 to SI2P3 $\overline{RES}$ PWM0, PWM1	Output disable Pull-up resistor OFF $V_{IN}=V_{SS}$ (including the off-leak current of the output Tr.)	2.2 to 5.5	-1			
	$I_{IL}(2)$	XT1, XT2	Using as an input port $V_{IN}=V_{SS}$	2.2 to 5.5	-1			
	$I_{IL}(3)$	CF1	$V_{IN}=V_{SS}$	2.2 to 5.5	-15			
High level output voltage	$V_{OH}(1)$	Ports 0, 1, 2, 3 Ports A, B, C, E, F SI2P0 to SI2P	I_{OH}=-1.0mA	4.5 to 5.5	V_{DD}-1			V
	$V_{OH}(2)$		I_{OH}=-0.4mA	3.0 to 5.5	V_{DD} -0.4			
	$V_{OH}(3)$		I_{OH}=-0.2mA	2.2 to 5.5	V_{DD} -0.4			
	$V_{OH}(4)$	Ports 71, 72, 73	I_{OH}=-0.4mA	3.0 to 5.5	V_{DD} -0.4			
	$V_{OH}(5)$		I_{OH}=-0.2mA	2.2 to 5.5	V_{DD} -0.4			
	$V_{OH}(6)$	PWM0, PWM1 P30, P31(PWM4, 5 output mode)	I_{OH}=-10mA	4.5 to 5.5	V_{DD} -1.5			
	$V_{OH}(7)$		I_{OH}=-1.6mA	3.0 to 5.5	V_{DD} -0.4			
	$V_{OH}(8)$		I_{OH}=-1.0mA	2.2 to 5.5	V_{DD} -0.4			
Low level output voltage	$V_{OL}(1)$	Ports 0, 1, 2, 3 Ports A, B, C, E, F SI2P0 to SI2P3 PWM0, PWM1,	I_{OL}=10mA	4.5 to 5.5			1.5	
	$V_{OL}(2)$		I_{OL}=1.6mA	3.0 to 5.5			0.4	
	$V_{OL}(3)$		I_{OL}=1.0mA	2.2 to 5.5			0.4	
	$V_{OL}(4)$	P00, P01	I_{OL}=30mA	4.5 to 5.5			1.5	
	$V_{OL}(5)$		I_{OL}=5.0mA	3.0 to 5.5			0.4	
	$V_{OL}(6)$		I_{OL}=2.5mA	2.2 to 5.5			0.4	
	$V_{OL}(7)$	Ports 7, 8, XT2	I_{OL}=1.6mA	3.0 to 5.5			0.4	
	$V_{OL}(8)$		I_{OL}=1.0mA	2.2 to 5.5			0.4	
Pull-up resistation	Rpu(1)	Ports 0, 1, 2, 3 Port 7 Ports A, B, C, E, F	$V_{OH}=0.9V_{DD}$	4.5 to 5.5	15	35	80	kΩ
	Rpu(2)			2.2 to 5.5	15	35	120	
Hysteresis voltage	VHYS	$\overline{RES}$ Ports 1, 2, 7 SI2P0 to SI2P3		2.2to 5.5		$0.1V_{DD}$		V
Pin capacitance	CP	All pins	• For pins other than that under test: $V_{IN}=V_{SS}$ • f=1MHz • Ta=25°C	2.2 to 5.5		10		pF

Serial I/O Characteristics at Ta = -40°C to +85°C, $V_{SS}1 = V_{SS}2 = V_{SS}3 = V_{SS}4 = 0V$

1. SIO0 Serial I/O Characteristics (Note 4-1-1)

Parameter			Symbol	Pins /Remarks	Conditions	V_{DD}[V]	Specification min	typ	max	unit
Serial clock	Input clock	Frequency	tSCK(1)	SCK0(P12)	• See Fig. 6.	2.2 to 5.5	2			tCYC
		Low level pulse width	tSCKL(1)				1			
		High level pulse width	tSCKH(1)				1			
			tSCKHA(1a)		• Continuous data transmission/reception mode • SIO2 is not in use simultaneous. • See Fig. 6. • (Note 4-1-2)		4			
			tSCKHA(1b)		• Continuous data transmission/reception mode • SIO2 is in use simultaneous. • See Fig. 6. • (Note 4-1-2)		6			
	Output clock	Frequency	tSCK(2)	SCK0(P12)	• CMOS output selected. • See Fig. 6.	2.2 to 5.5	4/3			tCYC
		Low level pulse width	tSCKL(2)				1/2			tSCK
		High level pulse width	tSCKH(2)				1/2			
			tSCKHA(2a)		• Continuous data transmission/reception mode • SIO2 is not in use simultaneous. • CMOS output selected. • See Fig. 6.		tSCKH(2) +2tCYC		tSCKH(2) +(10/3) tCYC	tCYC
			tSCKHA(2b)		• Continuous data transmission/reception mode • SIO2 is in use simultaneous. • CMOS output selected. • See Fig. 6.		tSCKH(2) +2tCYC		tSCKH(2) +(16/3) tCYC	
Serial input	Data setup time		tsDI(1)	SI0(P11), SB0(P11)	• Must be specified with respect to rising edge of SIOCLK • See fig. 6.	2.2 to 5.5	0.03			µs
	Data hold time		thDI(1)				0.03			
Serial output	Input clock	Output delay time	tdD0(1)	SO0(P10), SB0(P11),	• Continuous data transmission/reception mode • (Note 4-1-3)	2.2 to 5.5			(1/3)tCYC +0.05	
			tdD0(2)		• Synchronous 8-bit mode. • (Note 4-1-3)				1tCYC +0.05	
	Output clock		tdD0(3)		• (Note 4-1-3)				(1/3)tCYC +0.05	

Note 4-1-1: These specifications are theoretical values. Add margin depending on its use.

Note 4-1-2: To use serial-clock-input in continuous trans/rec mode, a time from SI0RUN being set when serial clock is "H" to the first negative edge of the serial clock must be longer than tSCKHA.

Note 4-1-3: Must be specified with respect to falling edge of SIOCLK. Must be specified as the time to the beginning of output state change in open drain output mode. See Fig. 6.

2. SIO1 Serial I/O Characteristics (Note 4-2-1)

Parameter			Symbol	Pins/ Remarks	Conditions		Specification			
						V_{DD}[V]	min	typ	max	unit
Serial clock	Input clock	Frequency	Tsck(3)	SCK1(P15)	• See Fig. 6.	2.2 to 5.5	2			tCYC
		Low level pulse width	tSCKL(3)				1			
		High level pulse width	tSCKH(3)				1			
	Output clock	Frequency	tSCK(4)	SCK1(P15)	• CMOS output selected. • See Fig. 6.	2.2 to 5.5	2			tSCK
		Low level pulse width	tSCKL(4)				1/2			
		High level pulse width	tSCKH(4)				1/2			
Serial input	Data setup time		tsDI(2)	SI1(P14), SB1(P14)	• Must be specified with respect to rising edge of SIOCLK • See fig. 6.	2.2 to 5.5	0.03			µs
	Data hold time		thDI(2)				0.03			
Serial output	Output delay time		tdD0(4)	SO1(P13), SB1(P14)	• Must be specified with respect to falling edge of SIOCLK • Must be specified as the time to the beginning of output state change in open drain output mode. • See Fig. 6.	2.2 to 5.5			(1/3)tCYC +0.05	

Note 4-2-1: These specifications are theoretical values. Add margin depending on its use.

3. SIO2 Serial I/O Characteristics (Note 4-3-1)

Parameter			Symbol	Pins/ Remarks	Conditions	V_{DD}[V]	Specification min.	typ	max.	unit
Serial clock	Input clock	Frequency	tSCK(5)	SCK2 (SI2P2)	• See Fig. 6.	2.2 to 5.5	2			tCYC
		Low level pulse width	tSCKL(5)				1			
		High level pulse width	tSCKH(5)				1			
			tSCKHA(5a)		• Continuous data transmission/ reception mode of SIO0 is not in use simultaneous. • See Fig. 6. • (Note 4-3-2)		4			
			tSCKHA(5b)		• Continuous data transmission/ reception mode of SIO0 is in use simultaneous. • See Fig. 6. • (Note 4-3-2)		7			
	Output clock	Frequency	tSCK(6)	SCK2 (SI2P2), SCK2O (SI2P3)	• CMOS output selected. • See Fig. 6.	2.2 to 5.5	4/3			tSCK
		Low level pulse width	tSCKL(6)				1/2			
		High level pulse width	tSCKH(6)				1/2			
			tSCKHA(6a)		• Continuous data transmission/ reception mode of SIO0 is not in use simultaneous. • CMOS output selected. • See Fig. 6.		tSCKH(6) +(5/3)tCYC		tSCKH(6) +(10/3)tCYC	tCYC
			tSCKHA(6b)		• Continuous data transmission/ reception mode of SIO0 is in use simultaneous. • CMOS output selected. • See Fig. 6.		tSCKH(6) +(5/3)tCYC		tSCKH(6) +(19/3)tCYC	
Serial input	Data setup time		tsDI(3)	SI2(SI2P1), SB2(SI2P1)	• Must be specified with respect to rising edge of SIOCLK • See fig. 6.	2.2 to 5.5	0.03			µs
	Data hold Time		thDI(3)				0.03			
Serial output	Output delay time		tdD0(5)	SO2 (SI2P0), SB2(SI2P1)	• Must be specified with respect to falling edge of SIOCLK • Must be specified as the time to the beginning of output state change in open drain output mode. • See Fig. 6.	2.2 to 5.5			(1/3)tCYC +0.05	

Note 4-3-1: These specifications are theoretical values. Add margin depending on its use.

Note 4-3-2: To use serial-clock-input , a time from SI2RUN being set when serial clock is "H" to the first negative edge of the serial clock must be longer than tSCKHA.

Pulse Input Conditions at Ta = -40°C to +85°C, $V_{SS}1 = V_{SS}2 = V_{SS}3 = V_{SS}4 = 0V$

Parameter	Symbol	Pins/Remarks	Conditions	Specification				
				V_{DD}[V]	min	typ	max	unit
High/low level pulse width	tPIH(1) tPIL(1)	INT0(P70), INT1(P71), INT2(P72) INT4(P20 to P23), INT5(P24 to P27), INT6(P20) INT7(P24)	• Interrupt source flag can be set. • Event inputs for timer 0 or 1 are enabled.	2.2 to 5.5	1			tCYC
	tPIH(2) tPIL(2)	INT3(P73) when noise filter time constant is 1/1.	• Interrupt source flag can be set. • Event inputs for timer 0 are enabled.	2.2 to 5.5	2			
	tPIH(3) tPIL(3)	INT3(P73)(The noise rejection clock is selected to 1/32.)	• Interrupt source flag can be set. • Event inputs for timer 0 are enabled.	2.2 to 5.5	64			
	tPIH(4) tPIL(4)	INT3(P73)(The noise rejection clock is selected to 1/128.)	• Interrupt source flag can be set. • Event inputs for timer 0 are enabled.	2.2 to 5.5	256			
	tPIL(5)	$\overline{RES}$	Reset acceptable.	2.2 to 5.5	200			µs

AD Converter Characteristics at Ta = -40°C to +85°C, $V_{SS}1 = V_{SS}2 = V_{SS}3 = V_{SS}4 = 0V$

Parameter	Symbol	Pins/Remarks	Conditions	Specification				
				V_{DD}[V]	min	typ	max	unit
Resolution	N	AN0(P80) to AN7(P87), AN8(P70), AN9(P71), AN10(XT1), AN11(XT2), AN12(PA3), AN13(PA4), AN14(PA5)		3.0 to 5.5		8		bit
Absolute accuracy	ET		(Note 6-1)	3.0 to 5.5			±1.5	LSB
Conversion time	TCAD		AD conversion time=32×tCYC (when ADCR2=0) (Note 6-2)	4.5 to 5.5	11.74 (tCYC= 0.367µs)		97.92 (tCYC= 3.06µs)	µs
				3.0 to 5.5	23.53 (tCYC= 0.735µs)		97.92 (tCYC= 3.06µs)	
			AD conversion time=64×tCYC (when ADCR2=1) (Note 6-2)	4.5 to 5.5	15.68 (tCYC= 0.245µs)		97.92 (tCYC= 1.53µs)	
				3.0 to 5.5	23.49 (tCYC= 0.367µs)		97.92 (tCYC= 1.53µs)	
Analog input voltage range	VAIN			3.0 to 5.5	V_{SS}		V_{DD}	V
Analog port input current	IAINH		VAIN=V_{DD}	3.0 to 5.5			1	µA
	IAINL		VAIN=V_{SS}	3.0 to 5.5	-1			

Note 6-1: The quantization error (±1/2 LSB) is excluded from the absolute accuracy value.

Note 6-2: The conversion time refers to the interval from the time the instruction for starting the converter is issued till the complete digital value corresponding to the analog input value is loaded in the required register.

Consumption Current Characteristics at Ta = -40°C to +85°C, $V_{SS}1 = V_{SS}2 = V_{SS}3 = V_{SS}4 = 0V$

Parameter	Symbol	Pins/Remarks	Conditions	Specification				
				V_{DD}[V]	min	typ	max	unit
Normal mode consumption current (Note 7-1)	IDDOP(1)	$V_{DD}1$ =$V_{DD}2$ =$V_{DD}3$ =$V_{DD}4$	• FmCF=12MHz ceramic oscillation mode • FmX'tal=32.768kHz by crystal oscillation mode • System clock set to 12MHz side • Internal RC oscillation stopped • frequency variable RC oscillation stopped • 1/1 frequency division ratio.	4.5 to 5.5		9.5	20.5	mA
				2.8 to 4.5		5.5	14.8	
	IDDOP(2)		• FmCF=8MHz ceramic oscillation mode • FmX'tal=32.768kHz by crystal oscillation mode • System clock set to 8MHz side • Internal RC oscillation stopped • frequency variable RC oscillation stopped • 1/1 frequency division ratio.	4.5 to 5.5		8	15.5	
	IDDOP(3)			2.5 to 4.5		4	11	
	IDDOP(4)		• FmCF=4MHz ceramic oscillation mode • FmX'tal=32.768kHz by crystal oscillation mode • System clock set to 4MHz side • Internal RC oscillation stopped • frequency variable RC oscillation stopped • 1/1 frequency division ratio.	4.5 to 5.5		2.8	6.6	
	IDDOP(5)			2.2 to 4.5		1.5	4.2	
	IDDOP(6)		• FmCF=0Hz (oscillation stopped) • FmX'tal=32.768kHz by crystal oscillation mode • System clock set to internal RC oscillation • frequency variable RC oscillation stopped •1/2 frequency division ratio.	4.5 to 5.5		1	4.8	
	IDDOP(7)			2.2 to 4.5		0.55	3.3	
	IDDOP(8)		• FmCF=0Hz (oscillation stopped) • FmX'tal=32.768kHz by crystal oscillation mode. • System clock set to 1MHz with frequency variable RC oscillation • Internal RC oscillation stopped • 1/2 frequency division ratio.	4.5 to 5.5		1.3	5.7	
	IDDOP(9)			2.2 to 4.5		0.7	4.6	
	IDDOP(10)		• FmCF=0Hz (oscillation stopped) • FmX'tal=32.768kHz by crystal oscillation mode. • System clock set to 32.768kHz side. • Internal RC oscillation stopped • frequency variable RC oscillation stopped • 1/2 frequency division ratio.	4.5 to 5.5		40	120	µA
	IDDOP(11)			2.2 to 4.5		20	77	
HALT mode consumption current (Note 7-1)	IDDHALT(1)	$V_{DD}1$ =$V_{DD}2$ =$V_{DD}3$ =$V_{DD}4$	• HALT mode • FmCF=12MHz ceramic oscillation mode • FmX'tal=32.768kHz by crystal oscillation mode • System clock set to 12MHz side • Internal RC oscillation stopped • frequency variable RC oscillation stopped • 1/1 frequency division ratio.	4.5 to 5.5		3.6	8.3	mA
				2.8 to 5.5		2.1	4.4	
	IDDHALT(2)		• HALT mode • FmCF=8MHz ceramic oscillation mode • FmX'tal=32.768kHz by crystal oscillation mode • System clock set to 8MHz side • Internal RC oscillation stopped • frequency variable RC oscillation stopped • 1/1 frequency division ratio.	4.5 to 5.5		2.7	5.8	
	IDDHALT(3)			2.5 to 4.5		1.4	3.1	

Note 7-1: The consumption current value includes none of the currents that flow into the output Tr and internal pull-up resistors

Continued on next page.

Continued from preceding page.

Parameter	Symbol	Pins/Remarks	Conditions	Specification				
				V_{DD}[V]	min	typ	max	unit
HALT mode consumption current (Note 7-1)	IDDHALT(4)	$V_{DD}1$ =$V_{DD}2$ =$V_{DD}3$ =$V_{DD}4$	• HALT mode • FmCF=4MHz ceramic oscillation mode • FmX'tal=32.768kHz by crystal oscillation mode • System clock set to 4MHz side • Internal RC oscillation stopped • frequency variable RC oscillation stopped • 1/1 frequency division ratio.	4.5 to 5.5		1.1	2.6	mA
	IDDHALT(5)			2.2 to 4.5		0.57	1.5	
	IDDHALT(6)		• HALT mode • FmCF=0Hz (oscillation stopped) • FmX'tal=32.768kHz by crystal oscillation mode • System clock set to internal RC oscillation • frequency variable RC oscillation stopped •1/2 frequency division ratio.	4.5 to 5.5		0.36	1.0	
	IDDHALT(7)			2.2 to 4.5		0.19	0.8	
	IDDHALT(8)		• HALT mode • FmCF=0Hz (oscillation stopped) • FmX'tal=32.768kHz by crystal oscillation mode. • System clock set to 1MHz with frequency variable RC oscillation • Internal RC oscillation stopped • 1/2 frequency division ratio.	4.5 to 5.5		1.15	4.2	
	IDDHALT(9)			2.2 to 4.5		0.57	3.0	
	IDDHALT(10)		• HALT mode • FmCF=0Hz (oscillation stopped) • FmX'tal=32.768kHz by crystal oscillation mode. • System clock set to 32.768kHz side. • Internal RC oscillation stopped • frequency variable RC oscillation stopped • 1/2 frequency division ratio.	4.5 to 5.5		20	77	µA
	IDDHALT(11)			2.2 to 4.5		6	70	
HOLD mode consumption current	IDDHOLD(1)	$V_{DD}1$	• HOLD mode • CF1=V_{DD} or open (External clock mode)	4.5 to 5.5		0.04	20	
	IDDHOLD(2)			2.2 to 4.5		0.02	15	
Timer HOLD mode consumption current	IDDHOLD(3)		• Timer HOLD mode • CF1=V_{DD} or open (External clock mode) • FmX'tal=32.768kHz by crystal oscillation mode	4.5 to 5.5		17	70	
	IDDHOLD(4)			2.2 to 4.5		4	55	

Note 7-1: The consumption current value includes none of the currents that flow into the output Tr and internal pull-up resistors

F-ROM Programming Characteristics at Ta = +10°C to +55°C, $V_{SS}1$ = $V_{SS}2$ = $V_{SS}3$ = $V_{SS}4$ = 0V

Parameter	Symbol	Pins/Remarks	Conditions	Specification				
				V_{DD}[V]	min	typ	max	unit
Onboard programming current	IDDFW(1)	$V_{DD}1$	• Without CPU current	2.70 to 5.5		5	10	mA
Programming time	tFW(1)		• Erasing	2.7 to 5.5		20	30	ms
	tFW(2)		• programming	2.7 to 5.5		40	60	µs

UART (Full Duplex) Operating Conditions at Ta = -40°C to +85°C, $V_{SS}1 = V_{SS}2 = V_{SS}3 = V_{SS}4 = 0V$

Parameter	Symbol	Pins/Remarks	Conditions	Specification				
				V_{DD}[V]	min	typ	max	unit
Transfer rate	UBR, UBR2	UTX1(P32), RTX1(P33), UTX2(P33), RTX2(P34)		2.5 to 5.5	16/3		8192/3	tCYC

Data length : 7/8/9 bits (LSB first)
Stop bits : 1-bit (2-bit in continuous data transmission)
Parity bits : None

Example of Continuous 8-bit Data Transmission Mode Processing (First Transmit Data = 55H)

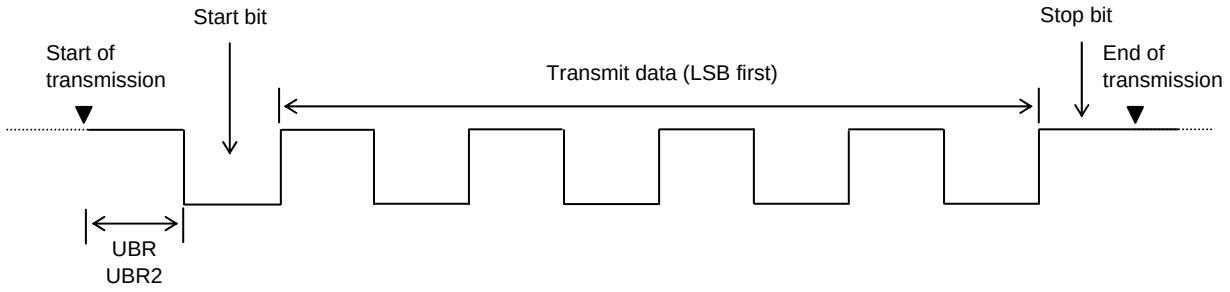

Example of Continuous 8-bit Data Reception Mode Processing (First Receive Data = 55H)

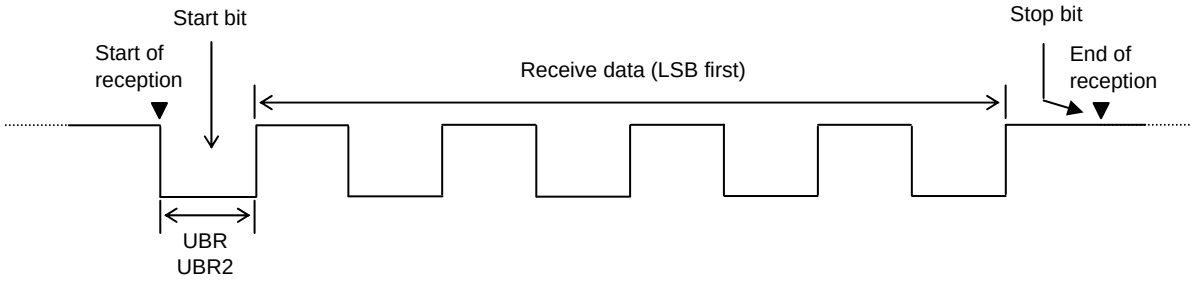

$V_{DD}1$, $V_{SS}1$ Terminal Condition

It is necessary to place capacitors between $V_{DD}1$ and $V_{SS}1$ as describe below.

- Place capacitors as close to $V_{DD}1$ and $V_{SS}1$ as possible.
- Place capacitors so that the length of each terminal to the each leg of the capacitor be equal (L1 = L1', L2 = L2').
- Place high capacitance capacitor C1 and low capacitance capacitor C2 in parallel.
- Capacitance of C2 must be more than 0.1µF.
- Use thicker pattern for $V_{DD}1$ and $V_{SS}1$.

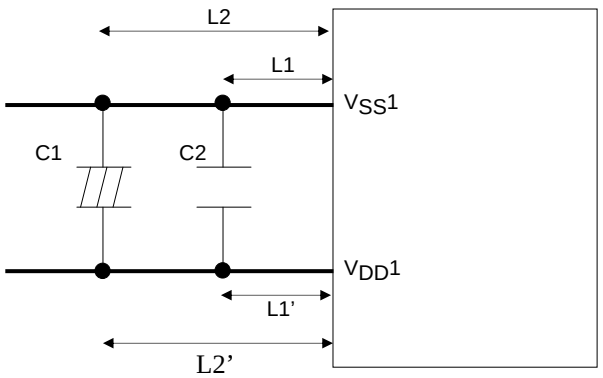

Characteristics of a Sample Main System Clock Oscillation Circuit

Given below are the characteristics of a sample main system clock oscillation circuit that are measured using a Our designated oscillation characteristics evaluation board and external components with circuit constant values with which the oscillator vendor confirmed normal and stable oscillation.

Table 1 Characteristics of a Sample Main System Clock Oscillator Circuit with a Ceramic Oscillator

Nominal Frequency	Vendor Name	Oscillator Name	Circuit Constant				Operating Voltage Range [V]	Oscillation Stabilization Time		Remarks
			C1 [pF]	C2 [pF]	Rf1 [Ω]	Rd1 [Ω]		typ [ms]	max [ms]	
12MHz	MURATA	CSTCE12M0G52-R0	(10)	(10)	Open	470	2.5 to 5.5	0.03	0.5	Internal C1,C2
10MHz		CSTCE10M0G52-R0	(10)	(10)	Open	680	2.4 to 5.5	0.03	0.5	Internal C1,C2
		CSTLS10M0G53-B0	(15)	(15)	Open	680	2.5 to 5.5	0.03	0.5	Internal C1,C2
8MHz		CSTCE8M00G52-R0	(10)	(10)	Open	1k	2.3 to 5.5	0.03	0.5	Internal C1,C2
		CSTLS8M00G53-B0	(15)	(15)	Open	1k	2.5 to 5.5	0.03	0.5	Internal C1,C2
4MHz		CSTCR4M00G53-R0	(15)	(15)	Open	1.5k	2.2 to 5.5	0.03	0.5	Internal C1,C2
		CSTLS4M00G53-B0	(15)	(15)	Open	1.5k	2.2 to 5.5	0.03	0.5	Internal C1,C2

The oscillation stabilization time refers to the time interval that is required for the oscillation to get stabilized after V_{DD} goes above the operating voltage lower limit (see Fig. 4).

Characteristics of a Sample Subsystem Clock Oscillator Circuit

Given below are the characteristics of a sample subsystem clock oscillation circuit that are measured using a Our designated oscillation characteristics evaluation board and external components with circuit constant values with which the oscillator vendor confirmed normal and stable oscillation.

Table 2 Characteristics of a Sample Subsystem Clock Oscillator Circuit with a Crystal Oscillator

Nominal Frequency	Vendor Name	Oscillator Name	Circuit Constant				Operating Voltage Range [V]	Oscillation Stabilization Time		Remarks
			C3 [pF]	C4 [pF]	Rf2 [Ω]	Rd2 [Ω]		typ [s]	max [s]	
32.768kHz	EPSON TOYOCOM	MC-306	18	18	Open	560k	2.2 to 5.5	1.5	3.0	Applicable CL value=12.5pF

The oscillation stabilization time refers to the time interval that is required for the oscillation to get stabilized after the instruction for starting the subclock oscillation circuit is executed and to the time interval that is required for the oscillation to get stabilized after the HOLD mode is reset (see Figure. 4).

Note: The components that are involved in oscillation should be placed as close to the IC and to one another as possible because they are vulnerable to the influences of the circuit pattern.

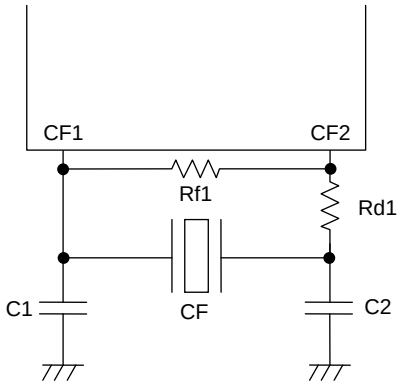

Figure 1 Ceramic Oscillator Circuit

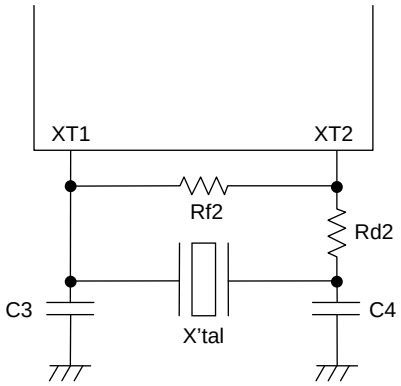

Figure 2 Crystal Oscillator Circuit

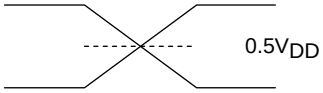

Figure 3 AC Timing Measurement Point

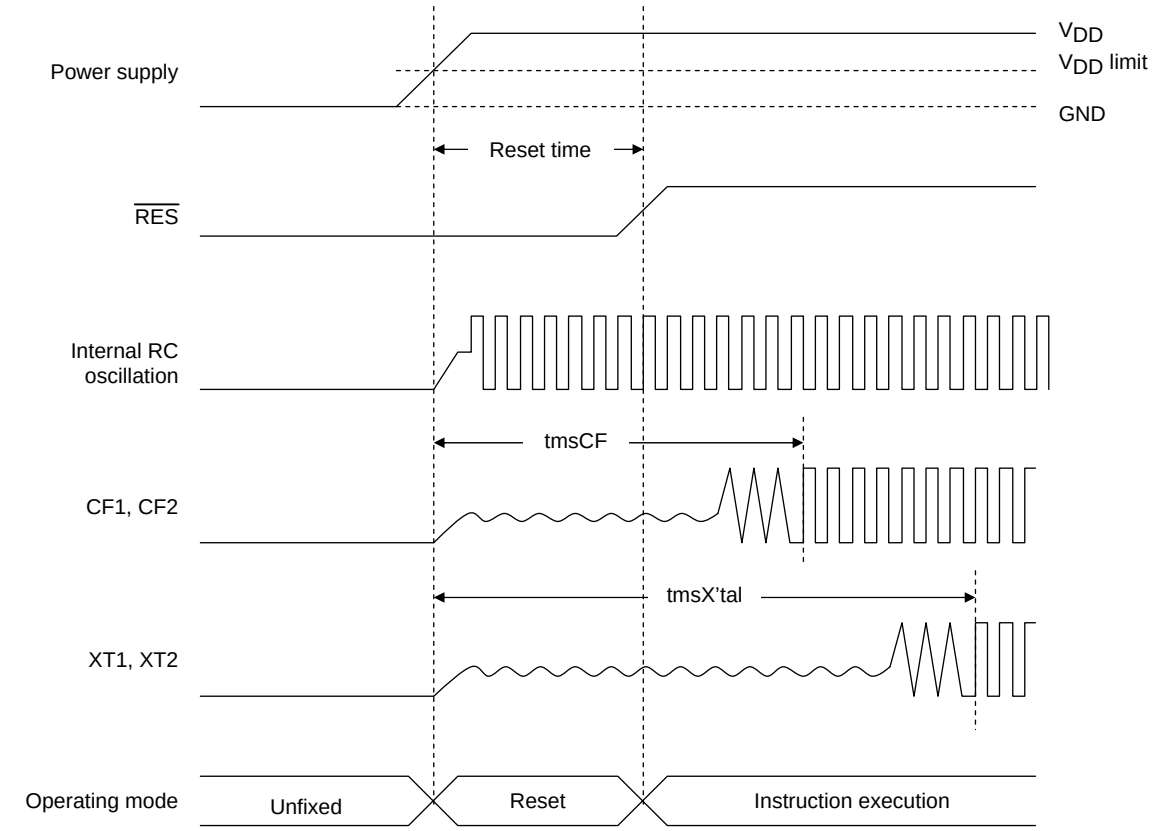

Reset Time and Oscillation Stabilization Time

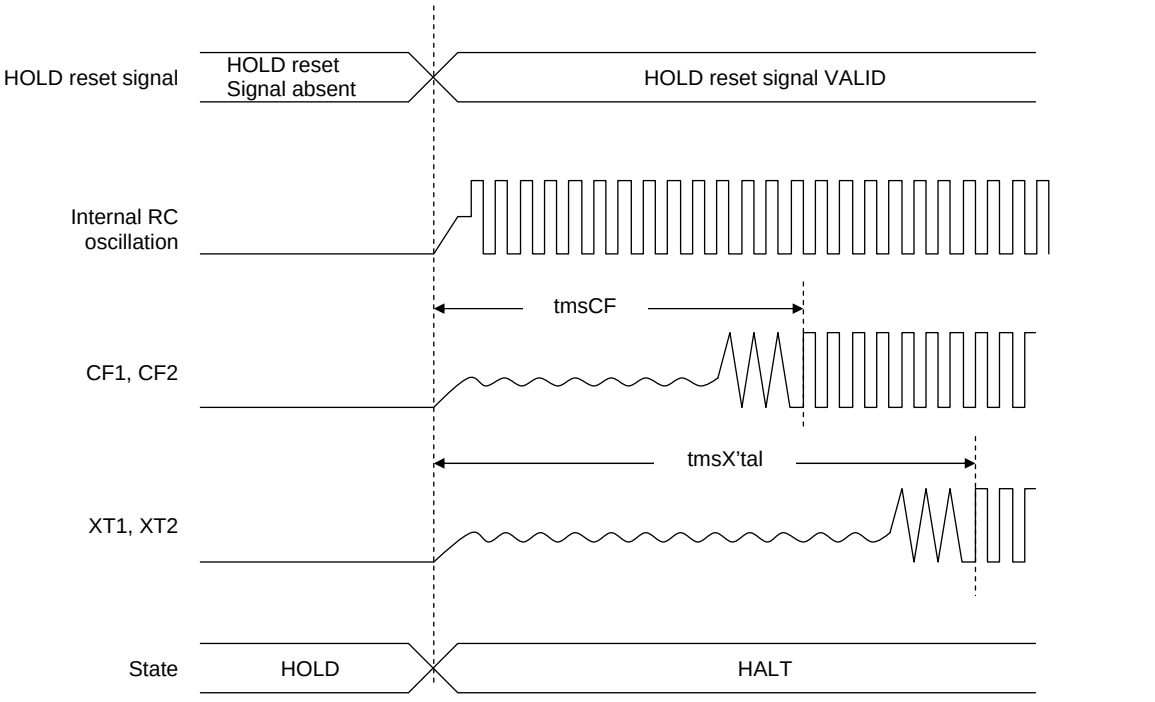

HOLD Release Signal and Oscillation Stabilization Time

Figure 4 Oscillation Stabilization Times

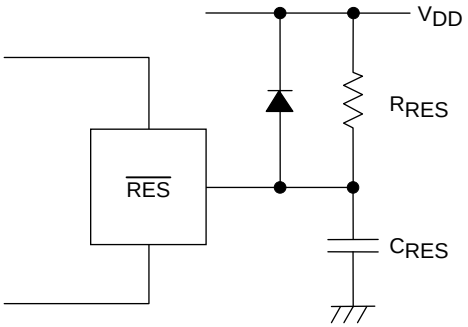

Note:
Select C_{RES} and R_{RES} value to assure that at least 200µs reset time is generated after the V_{DD} becomes higher than the minimum operating voltage..

Figure 5 Reset Circuit

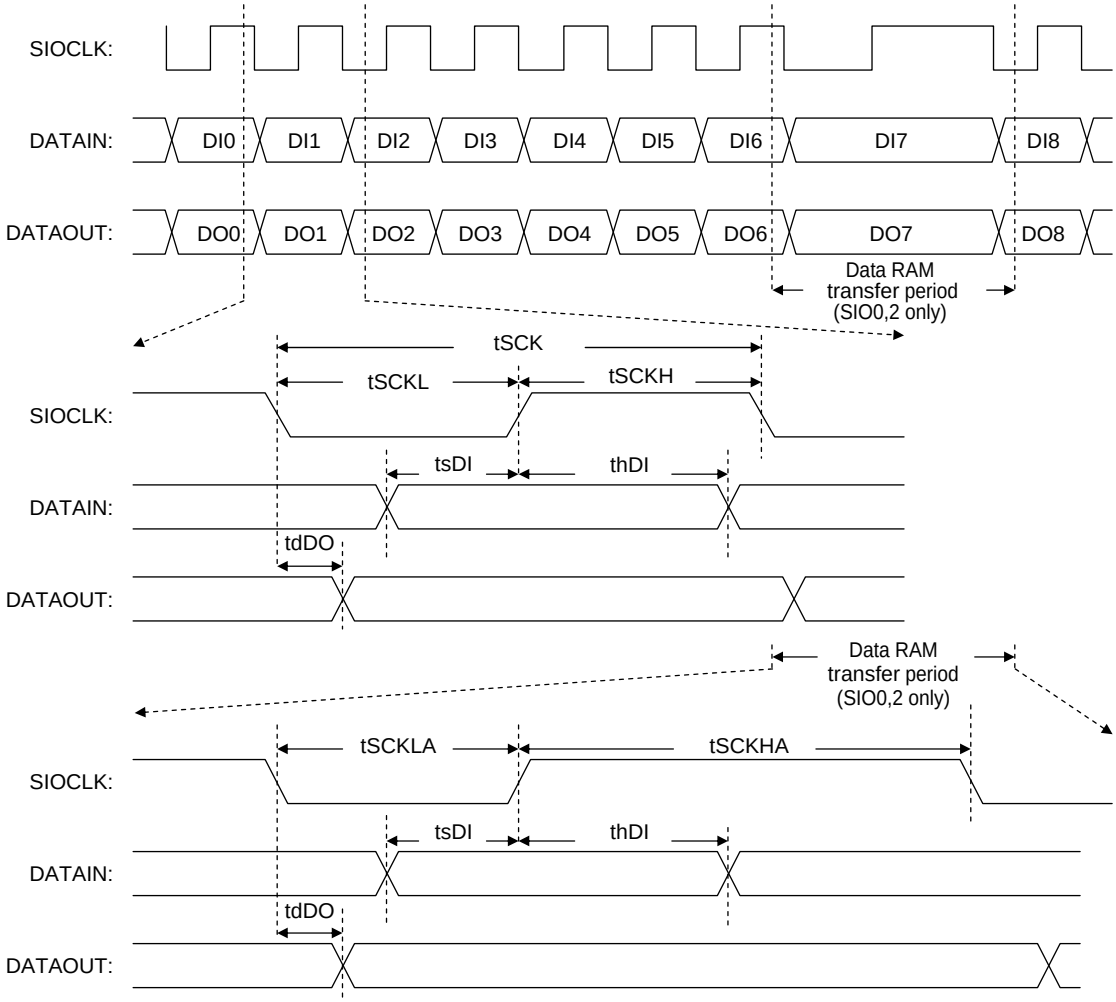

Figure 6 Serial I/O Waveforms

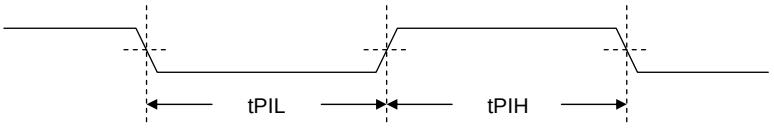

Figure 7 Pulse Input Timing Signal Waveform

ON Semiconductor and the ON logo are registered trademarks of Semiconductor Components Industries, LLC (SCILLC). SCILLC owns the rights to a number of patents, trademarks, copyrights, trade secrets, and other intellectual property. A listing of SCILLC's product/patent coverage may be accessed at www.onsemi.com/site/pdf/Patent-Marking.pdf. SCILLC reserves the right to make changes without further notice to any products herein. SCILLC makes no warranty, representation or guarantee regarding the suitability of its products for any particular purpose, nor does SCILLC assume any liability arising out of the application or use of any product or circuit, and specifically disclaims any and all liability, including without limitation special, consequential or incidental damages. "Typical" parameters which may be provided in SCILLC data sheets and/or specifications can and do vary in different applications and actual performance may vary over time. All operating parameters, including "Typicals" must be validated for each customer application by customer's technical experts. SCILLC does not convey any license under its patent rights nor the rights of others. SCILLC products are not designed, intended, or authorized for use as components in systems intended for surgical implant into the body, or other applications intended to support or sustain life, or for any other application in which the failure of the SCILLC product could create a situation where personal injury or death may occur. Should Buyer purchase or use SCILLC products for any such unintended or unauthorized application, Buyer shall indemnify and hold SCILLC and its officers, employees, subsidiaries, affiliates, and distributors harmless against all claims, costs, damages, and expenses, and reasonable attorney fees arising out of, directly or indirectly, any claim of personal injury or death associated with such unintended or unauthorized use, even if such claim alleges that SCILLC was negligent regarding the design or manufacture of the part. SCILLC is an Equal Opportunity/Affirmative Action Employer. This literature is subject to all applicable copyright laws and is not for resale in any manner.