LC75809PT

1/4 and 1/3-Duty General-Purpose LCD Driver

ON Semiconductor®

www.onsemi.com

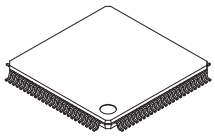

TQFP100 14x14 / TQFP100

Overview

The LC75809PT is the 1/4 duty and 1/3 duty general-purpose microprocessor-controlled LCD driver that can be used in applications such as frequency display in products with electronic tuning. In addition to being able to drive up to 352 segments directly, the LC75809PT can also control up to 12 general-purpose output ports. Because it has the PWM output of a maximum of 6 ch, the brightness control of the LED backlight of RGB ×2 can be done. Incorporation of an oscillation circuit helps to reduce the number of external resistors and capacitors required.

Features

- Support for 1/4-duty 1/3-bias or 1/3-duty 1/3-bias drive techniques under serial data control.
  - When 1/4-duty : Capable of driving up to 352 segments
  - When 1/3-duty : Capable of driving up to 267 segments
- Serial data input supports CCB* format communication with the system controller. (Support 3.3 V and 5 V operation)
- Serial data control of the power-saving mode based backup function and the all segments forced off function.
- Serial data control of switching between the segment output port and general-purpose output port function.
  (Support for up to 12 general-purpose output ports)
- Support for the PWM output function of a maximum of 6 ch.
  (It can output from the general-purpose output port).
- Support for clock output function of 1 ch.
  (It can output from the general-purpose output port).
- Serial data control of the frame frequency of the common and segment output waveforms.
- Serial data control of switching between the internal oscillator operating mode and external clock operating mode.
- High generality, since display data is displayed directly without the intervention of a decoder circuit.
- Built-in display contrast adjustment circuit.
- The $\overline{\text{INH}}$ pin allows the display to be forced to the off state.
- Incorporation of an oscillator circuit.
  (Incorporation of resistor and capacitor for an oscillation)

* Computer Control Bus (CCB) is an ON Semiconductor's original bus format and the bus addresses are controlled by ON Semiconductor.

ORDERING INFORMATION

See detailed ordering and shipping information on page 43 of this data sheet.

© Semiconductor Components Industries, LLC, 2017

June 2017 - Rev. 1

Publication Order Number :
LC75809PT/D

Specifications

Absolute Maximum Ratings at Ta = 25°C, V_{SS} = 0 V

Parameter	Symbol	Conditions	Ratings	Unit
Maximum supply voltage	V_{DD} max	V_{DD}	−0.3 to +6.8	V
Input voltage	$V_{IN}1$	CE, CL, DI, $\overline{INH}$	−0.3 to +6.8	V
	$V_{IN}2$	OSCI, $V_{DD}1$, $V_{DD}2$	−0.3 to V_{DD}+0.3	
Output voltage	V_{OUT}	S1 to S89, COM1 to COM4, P1 to P12	−0.3 to V_{DD}+0.3	V
Output current	$I_{OUT}1$	S1 to S88	300	μA
	$I_{OUT}2$	COM1 to COM4, S89	3	mA
	$I_{OUT}3$	P1 to P12	5	
Allowable power dissipation	Pd max	Ta = 85°C	200	mW
Operating temperature	Topr		−40 to +85	°C
Storage temperature	Tstg		−55 to +125	°C

Stresses exceeding those listed in the Maximum Ratings table may damage the device. If any of these limits are exceeded, device functionality should not be assumed, damage may occur and reliability may be affected.

Allowable Operating Ranges at Ta = −40 to +85°C, V_{SS} = 0 V

Parameter	Symbol	Conditions	Ratings			Unit
			min	typ	max	
Supply voltage	V_{DD}	V_{DD}	4.5		6.3	V
Input voltage *1	$V_{DD}1$	$V_{DD}1$		2/3$V_{DD}0$	$V_{DD}0$	V
	$V_{DD}2$	$V_{DD}2$		1/3$V_{DD}0$	$V_{DD}0$	
Input high level voltage	$V_{IH}1$	CE, CL, DI, $\overline{INH}$	0.4V_{DD}		6.3	V
	$V_{IH}2$	OSCI: External clock operating mode	0.4V_{DD}		V_{DD}	
Input low level voltage	$V_{IL}1$	CE, CL, DI, $\overline{INH}$	0		0.2V_{DD}	V
	$V_{IL}2$	OSCI: External clock operating mode	0		0.2V_{DD}	
External clock operating frequency	f_{CK}	OSCI: External clock operating mode [Figure4]	10	300	600	kHz
External clock duty cycle	D_{CK}	OSCI: External clock operating mode [Figure4]	30	50	70	%
Data setup time	tds	CL, DI [Figure2], [Figure3]	160			ns
Data hold time	tdh	CL, DI [Figure2], [Figure3]	160			ns
CE wait time	tcp	CE, CL [Figure2], [Figure3]	160			ns
CE setup time	tcs	CE, CL [Figure2], [Figure3]	160			ns
CE hold time	tch	CE, CL [Figure2], [Figure3]	160			ns
High level clock pulse width	tϕH	CL [Figure2], [Figure3]	160			ns
Low level clock pulse width	tϕL	CL [Figure2], [Figure3]	160			ns
Rise time	tr	CE, CL, DI [Figure2], [Figure3]		160		ns
Fall time	tf	CE, CL, DI [Figure2], [Figure3]		160		ns
$\overline{INH}$ switching time	tc	$\overline{INH}$, CE [Figure5], [Figure6] [Figure7], [Figure8]	10			μs

Note : *1. $V_{DD}0$ = 0.70V_{DD} to V_{DD}

Functional operation above the stresses listed in the Recommended Operating Ranges is not implied. Extended exposure to stresses beyond the Recommended Operating Ranges limits may affect device reliability.

Electrical Characteristics for the Allowable Operating Ranges

Parameter	Symbol	Pin	Conditions	Ratings			Unit
				min	typ	max	
Hysteresis	V_H	CE, CL, DI, $\overline{INH}$			$0.03V_{DD}$		V
Input high level current	$I_{IH}1$	CE, CL, DI, $\overline{INH}$	V_I = 6.3 V			5.0	μA
	$I_{IH}2$	OSCI	$V_I = V_{DD}$: External clock operating mode			5.0	
Input low level current	$I_{IL}1$	CE, CL, DI, $\overline{INH}$	V_I = 0 V	−5.0			μA
	$I_{IL}2$	OSCI	V_I = 0 V: External clock operating mode	−5.0			
Output high level voltage *1	$V_{OH}1$	S1 to S89	I_O = −20 μA	$V_{DD}0$−0.9			V
	$V_{OH}2$	COM1 to COM4	I_O = −100 μA	$V_{DD}0$−0.9			
	$V_{OH}3$	P1 to P12	I_O = −1 mA	V_{DD}−0.9			
Output low level voltage	$V_{OL}1$	S1 to S89	I_O = 20 μA			0.9	V
	$V_{OL}2$	COM1 to COM4	I_O = 100 μA			0.9	
	$V_{OL}3$	P1 to P12	I_O = 1 mA			0.9	
Output middle level voltage *1 *2	$V_{MID}1$	S1 to S89	1/3 bias I_O = ±20 μA	$2/3V_{DD}0$ −0.9		$2/3V_{DD}0$ +0.9	V
	$V_{MID}2$	S1 to S89	1/3 bias I_O = ±20 μA	$1/3V_{DD}0$ −0.9		$1/3V_{DD}0$ +0.9	
	$V_{MID}3$	COM1 to COM4	1/3 bias I_O = ±100 μA	$2/3V_{DD}0$ −0.9		$2/3V_{DD}0$ +0.9	
	$V_{MID}4$	COM1 to COM4	1/3 bias I_O = ±100 μA	$1/3V_{DD}0$ −0.9		$1/3V_{DD}0$ +0.9	
Oscillator frequency	fosc	Internal oscillator circuit	Internal oscillator operating mode	240	300	360	kHz
Current drain	$I_{DD}1$	V_{DD}	Power-saving mode			100	μA
	$I_{DD}2$	V_{DD}	V_{DD} = 6.3 V Output open Internal oscillator operating mode		1000	2000	
	$I_{DD}3$	V_{DD}	V_{DD} = 6.3 V Output open External clock operating mode f_{CK} = 300 kHz $V_{IH}2 = 0.5V_{DD}$ $V_{IL}2 = 0.1V_{DD}$		1000	2000	

Note: *1. $V_{DD}0 = 0.70V_{DD}$ to V_{DD}

Note: *2. Excluding the bias voltage generation divider resistors built in the $V_{DD}1$ and $V_{DD}2$. (See Figure 1.)

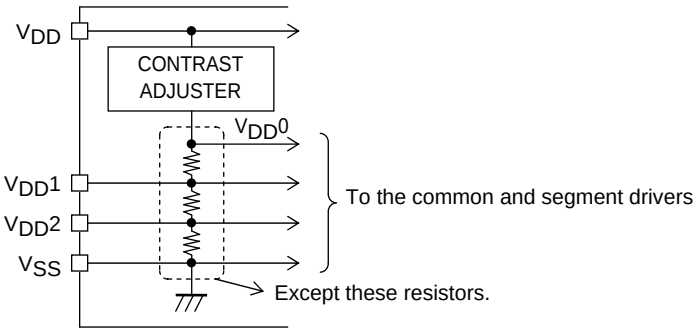

[Figure 1]

Product parametric performance is indicated in the Electrical Characteristics for the listed test conditions, unless otherwise noted. Product performance may not be indicated by the Electrical Characteristics if operated under different conditions.

1. When CL is stopped at the low level

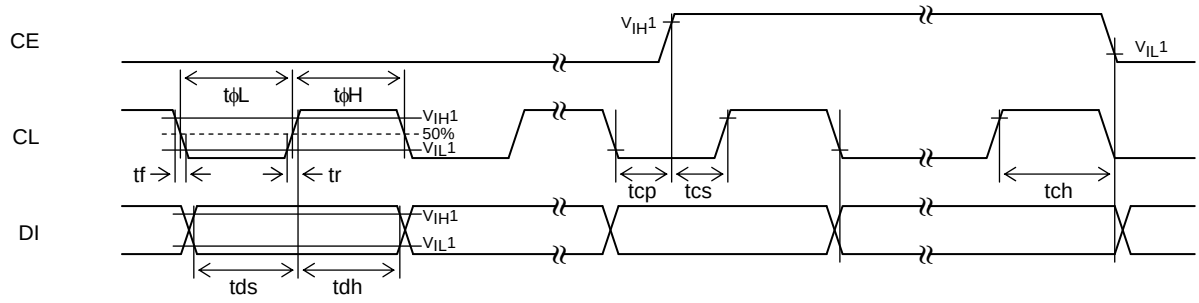

[Figure 2]

2. When CL is stopped at the high level

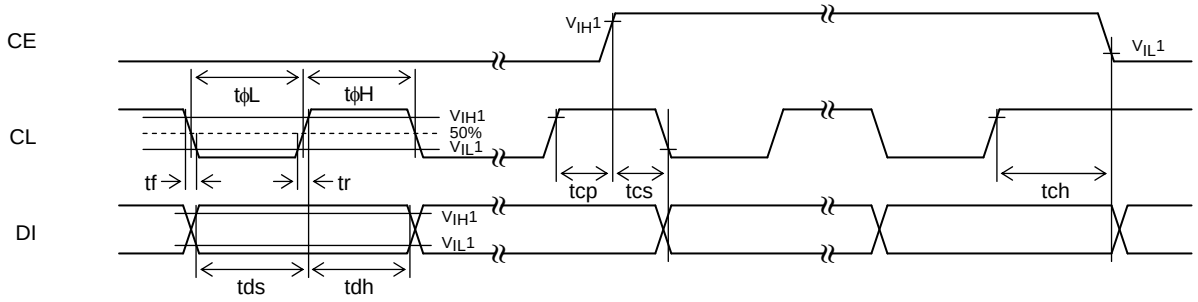

[Figure 3]

3. OSCI pin clock timing in external clock operating mode

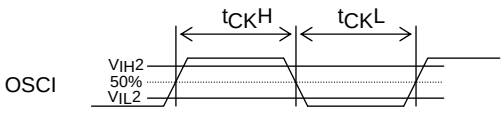

$$f_{CK} = \frac{1}{t_{CK}H + t_{CK}L} \text{ [kHz]}$$

$$D_{CK} = \frac{t_{CK}H}{t_{CK}H + t_{CK}L} \times 100[\%]$$

[Figure 4]

Package Dimensions

unit : mm

TQFP100 14x14 / TQFP100
CASE 932AY
ISSUE A

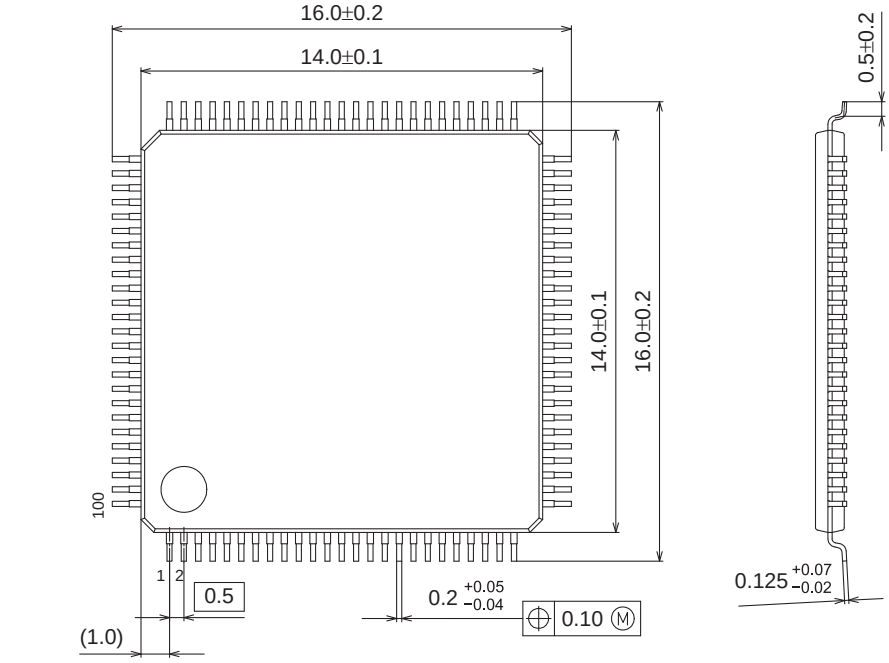

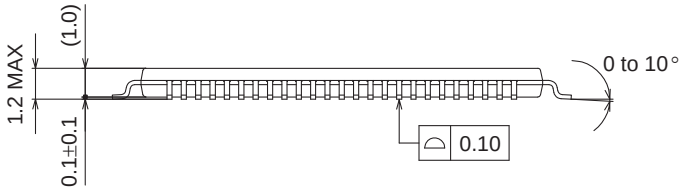

SOLDERING FOOTPRINT*

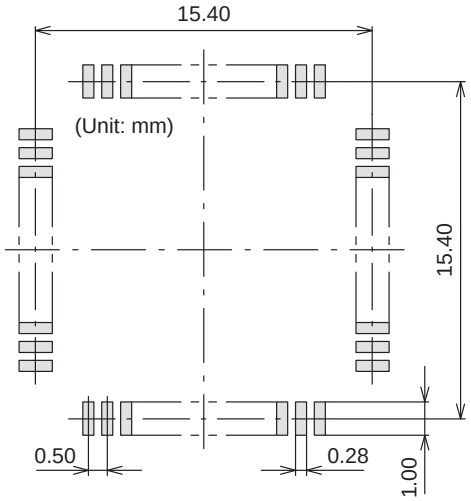

GENERIC MARKING DIAGRAM*

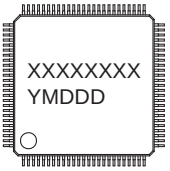

XXXXX = Specific Device Code
Y = Year
M = Month
DDD = Additional Traceability Data

*This information is generic. Please refer to device data sheet for actual part marking. Pb-Free indicator, “G” or microdot “▪”, may or may not be present.

NOTE: The measurements are not to guarantee but for reference only.

*For additional information on our Pb-Free strategy and soldering details, please download the ON Semiconductor Soldering and Mounting Techniques Reference Manual, SOLDERRM/D.

Pin Assignment

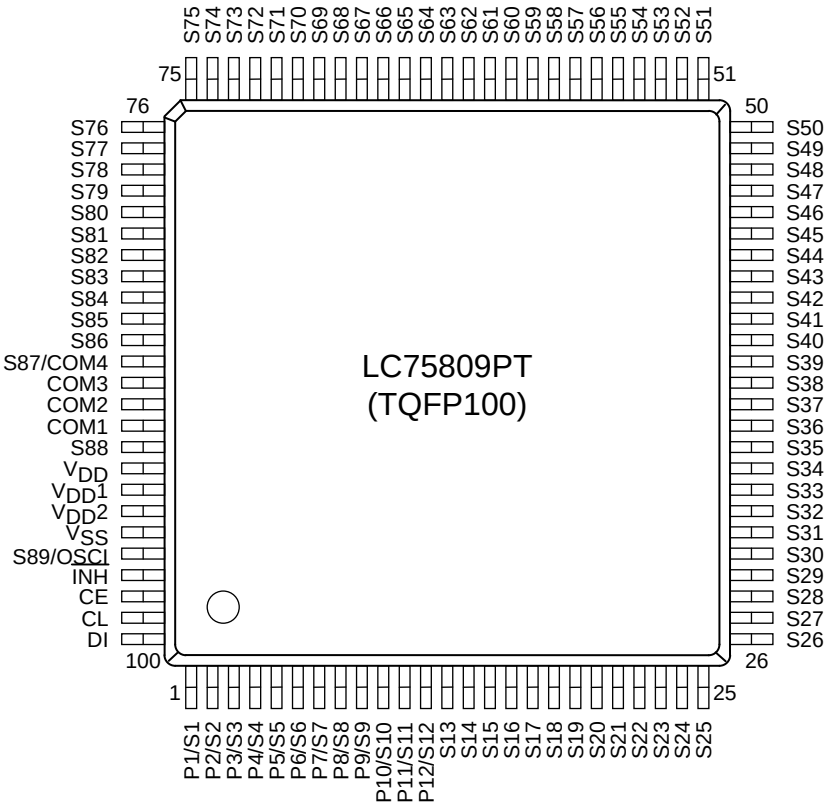

Top view

Block Diagram

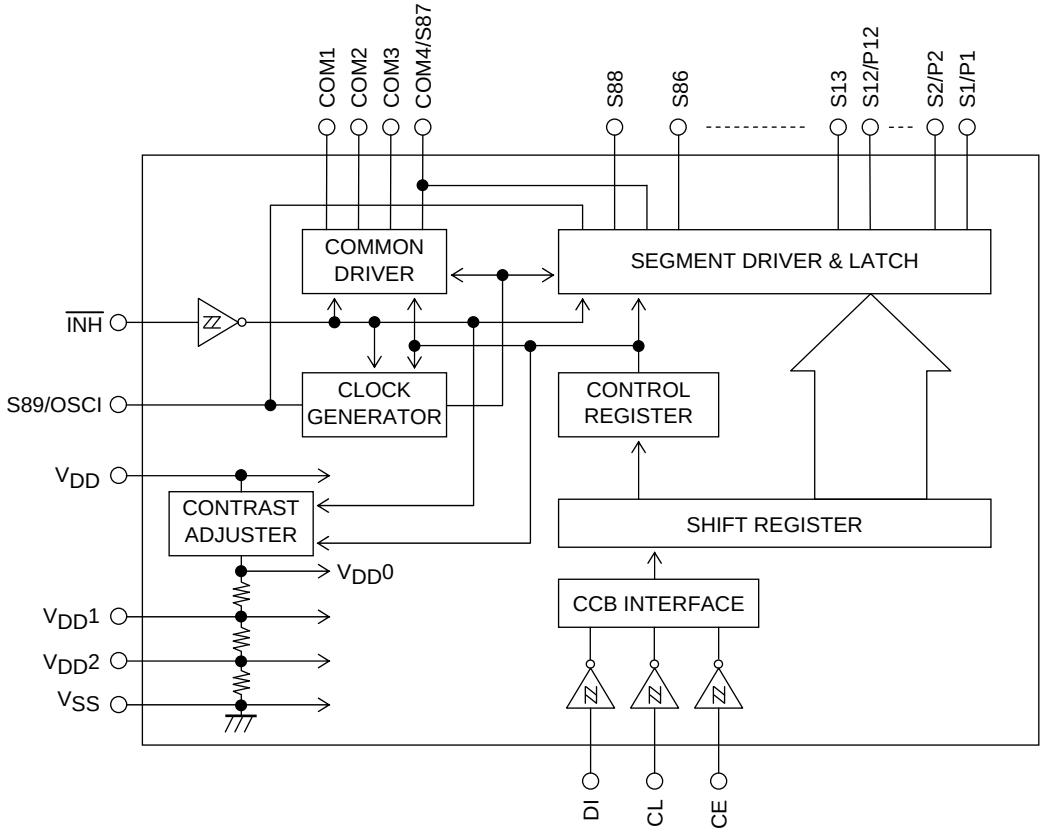

Pin Functions

Pin	Pin No.	Function	Active	I/O	Handling when unused
S1/P1 to S12/P12 S13 to S86 S88	1 to 12 13 to 86 91	Segment outputs for displaying the display data transferred by serial data input. The S1/P1 to S12/P12 pins can be used as general-purpose output ports under serial data control.	-	O	OPEN
COM1 to COM3 COM4/S87	90 to 88 87	Common driver outputs The frame frequency is fo[Hz]. The COM4/S87 pin can be used as a segment output in 1/3 duty.	-	O	OPEN
S89/OSCI	96	Segment output. This pin can also be used as the external clock input pin when the external clock operating mode is selected by control data.	-	I/O	OPEN
CE CL DI	98 99 100	Serial data transfer inputs. Must be connected to the controller. CE : Chip enable CL : Synchronization clock DI : Transfer data	H ↑ -	I I I	GND
$\overline{INH}$	97	Display off control input •$\overline{INH}$=low(V_{SS})….Display forced off S1/P1 to S12/P12=low (V_{SS}) (These pins are forcibly set to the general-purpose output port function and held at the V_{SS} level.) S13 to S86, S88=low(V_{SS}) COM1 to COM3=low(V_{SS}) COM4/S87=low(V_{SS}) S89/OSCI=low(V_{SS}) (This pin is forcibly set to the segment output port function and held at the V_{SS} level.) Stops the internal oscillator. Inhibits external clock input. Display contrast adjustment circuit stopped. •$\overline{INH}$=high(V_{DD})…Display on Enables the internal oscillator circuit. (Internal oscillator operating mode) Enables external clock input. (External clock operating mode) Display contrast adjustment circuit operation is enabled. However, serial data transfer is possible when the display is forced off.	L	I	GND
$V_{DD}1$	93	Used to apply the LCD drive 2/3 bias voltage externally.	-	I	OPEN
$V_{DD}2$	94	Used to apply the LCD drive 1/3 bias voltage externally.	-	I	OPEN
V_{DD}	92	Power supply pin. A power voltage of 4.5 to 6.3V must be applied to this pin.	-	-	-
V_{SS}	95	Ground pin. Must be connected to ground.	-	-	-

Serial Data Input

1. 1/4 duty

(1) When CL is stopped at the low level

• When the display data is transferred

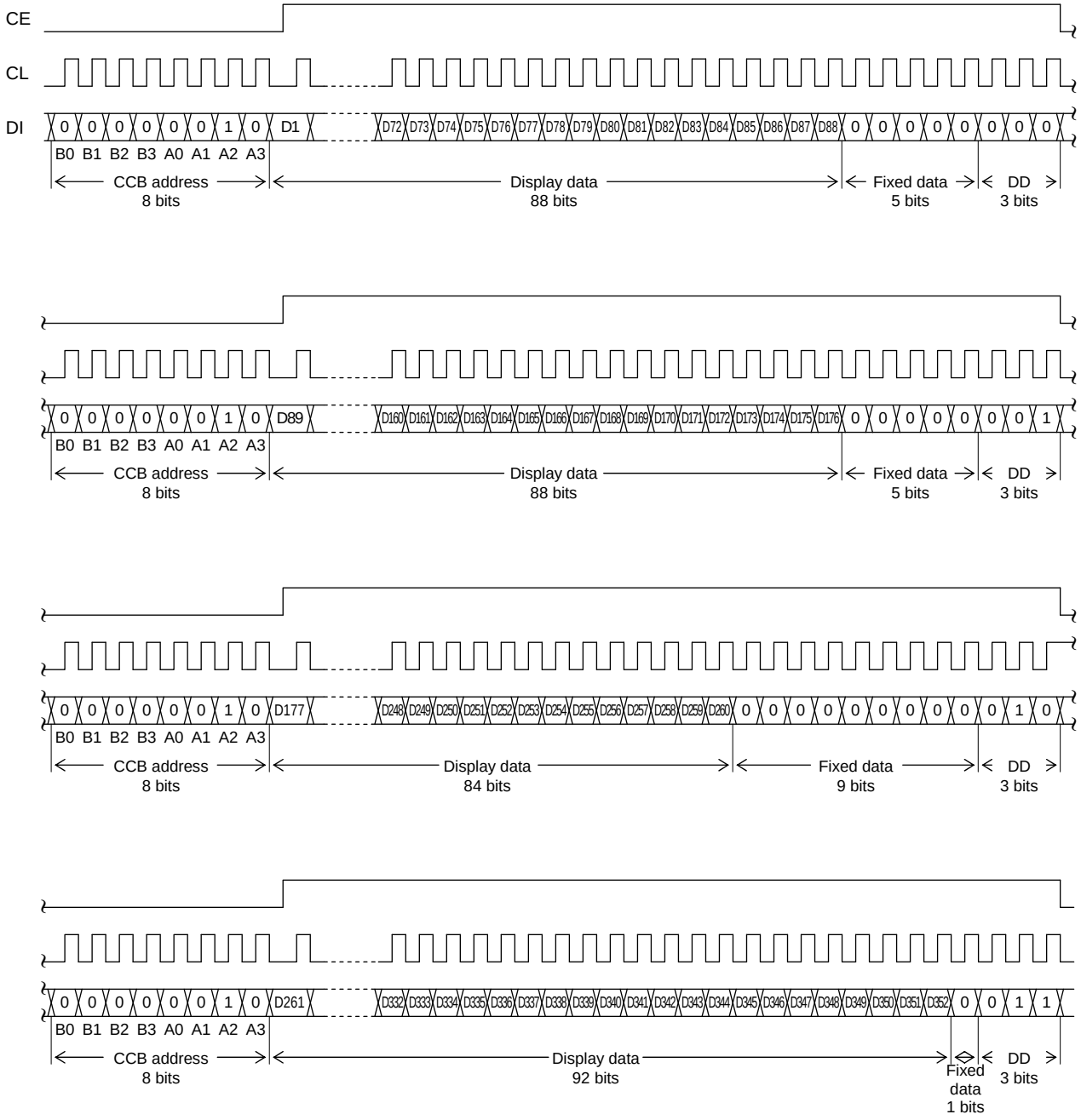

• When the control data is transferred

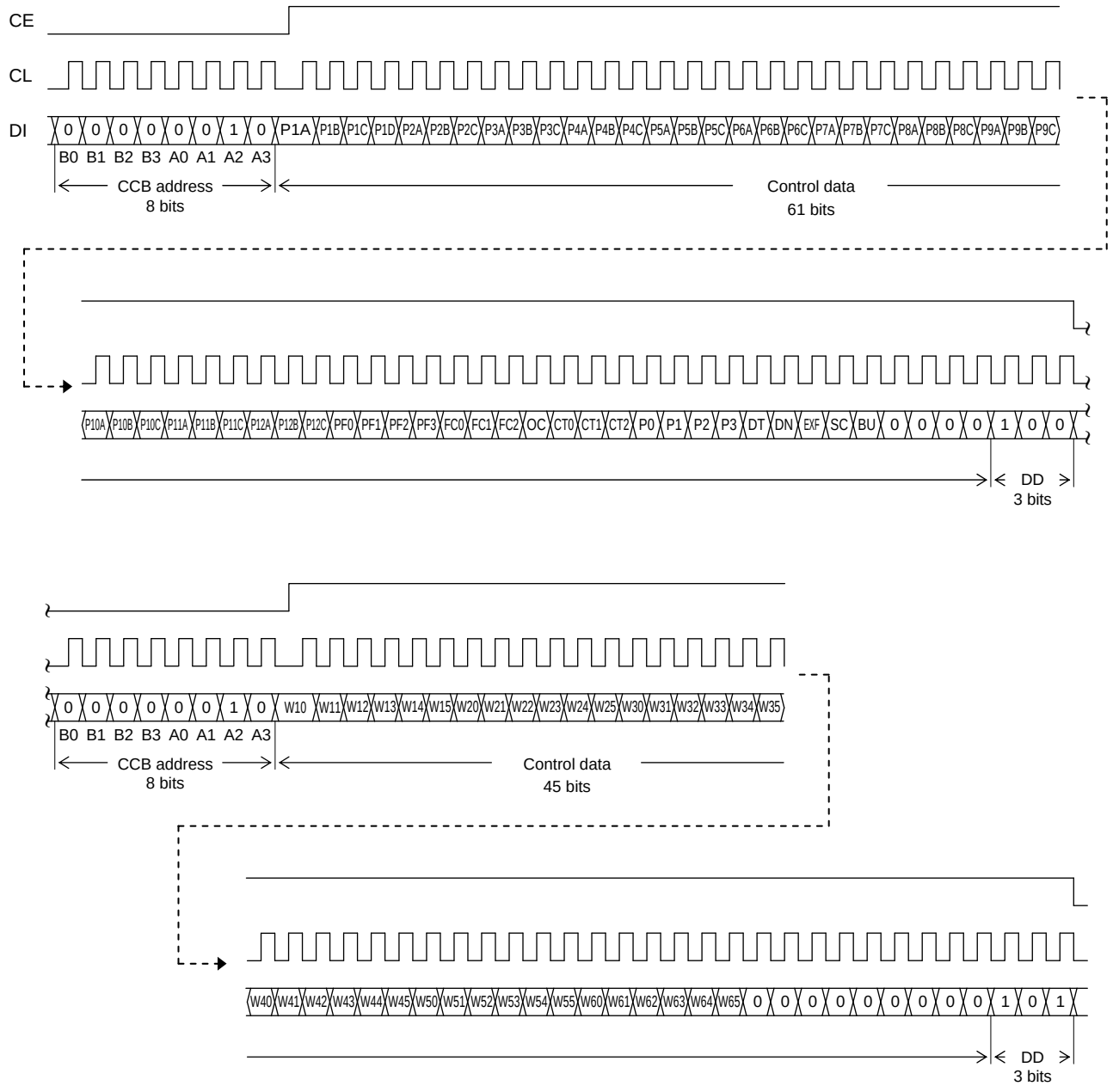

Note: DD is the direction data.

(2) When CL is stopped at the high level

• When the display data is transferred

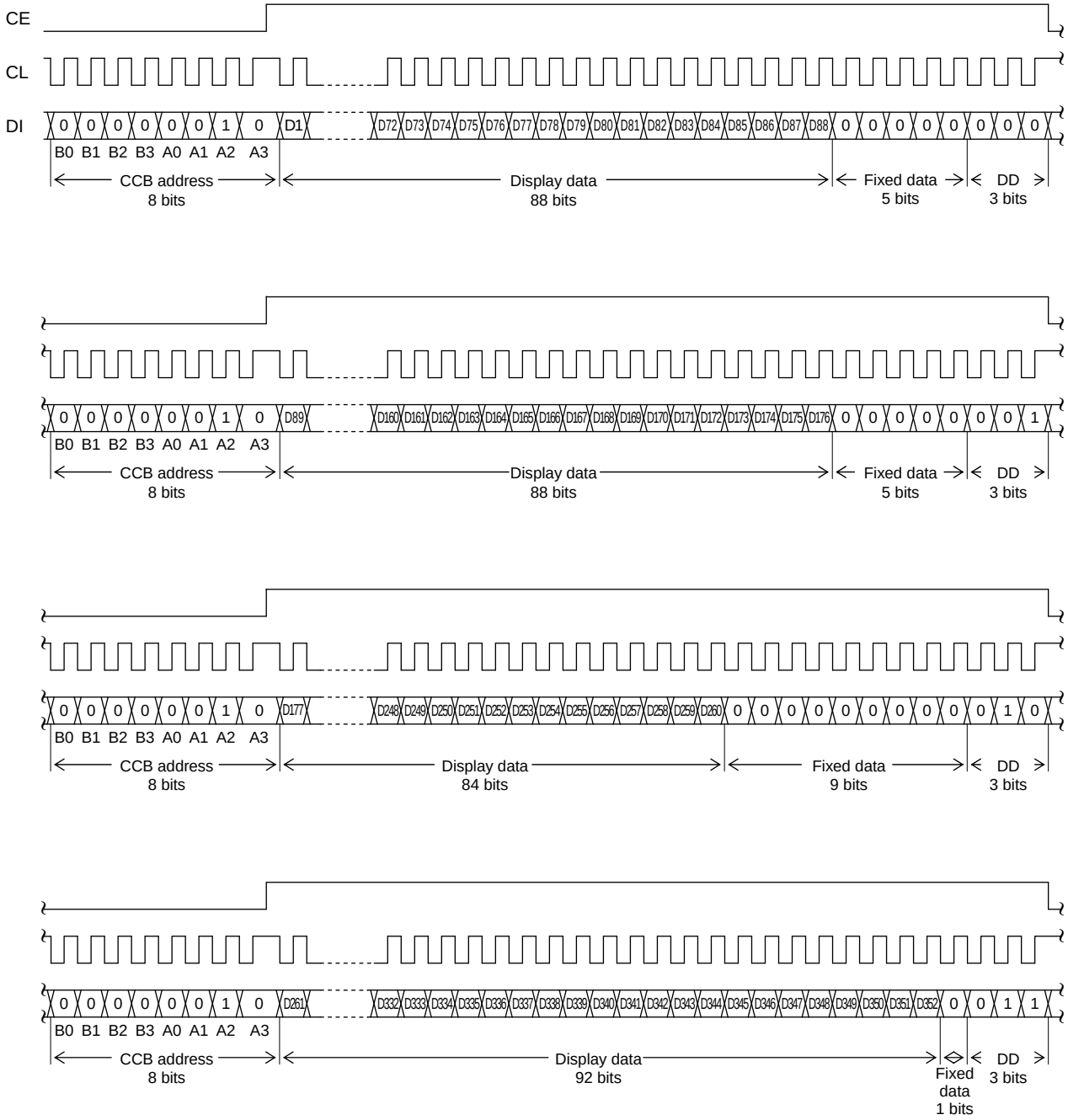

• When the control data is transferred

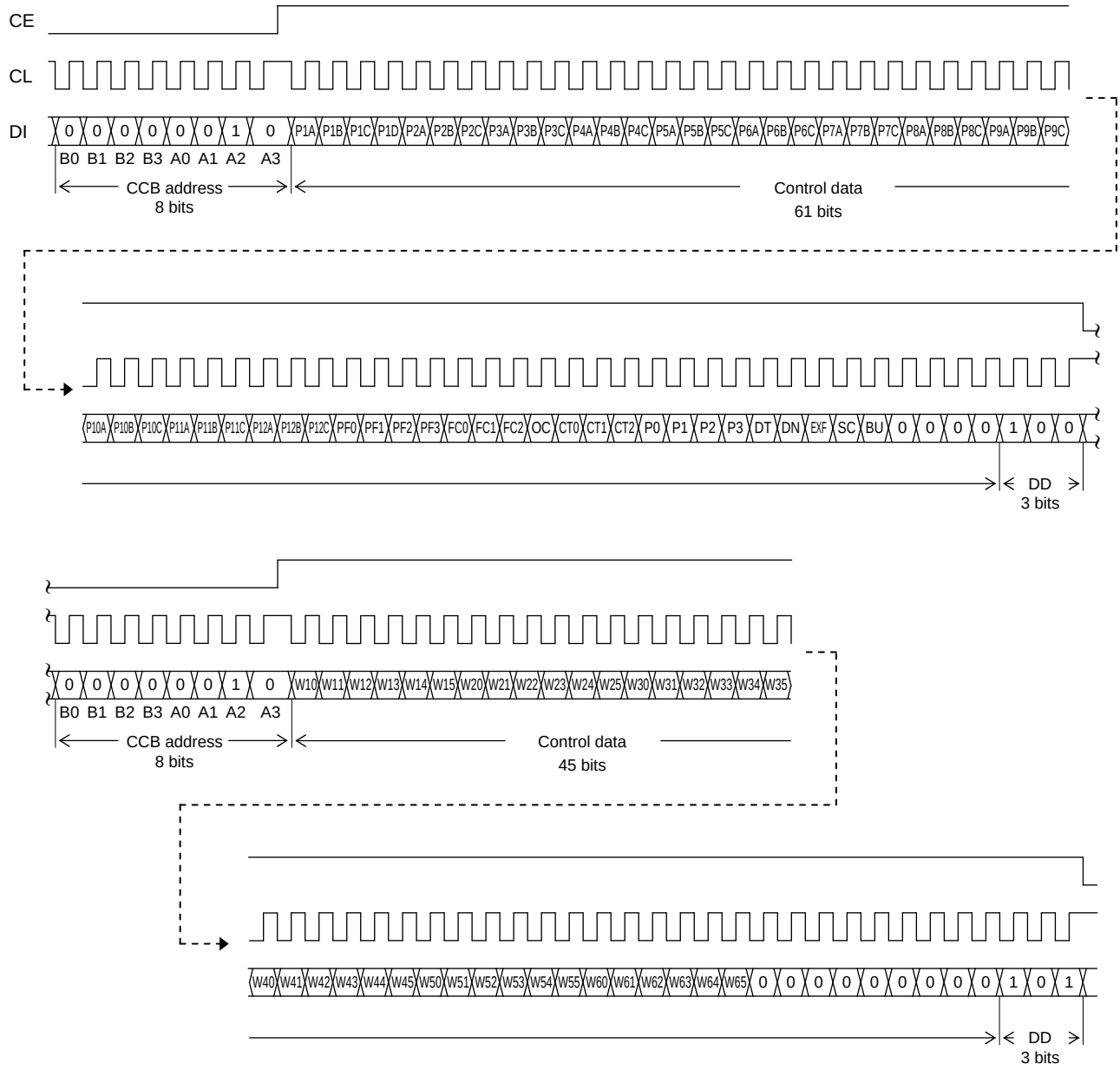

Note: DD is the direction data

- CCB address ..... "40H"
- D1 to D352 ..... Display data
- P1A, P1B, P1C, P1D ..... General-purpose output port (P1) function setting control data
- P2A, P2B, P2C to P12A, P12B, P12C ..... General-purpose output port (P2 to P12) function setting control data
- PF0 to PF3 ..... PWM output waveform frame frequency setting control data
- FC0 to FC2 ..... Common/segment output waveform frame frequency setting control data
- OC ..... Internal oscillator operating mode/external clock operating mode switching control data
- CT0 to CT2 ..... Display contrast setting control data
- P0 to P3 ..... Segment output port/general-purpose output port switching control data
- DT ..... 1/4-duty 1/3-bias drive or 1/3-duty 1/3-bias drive switching control data
- DN ..... S88 pin and S89/OSCI pin state setting control data
- EXF ..... External clock operating frequency setting control data
- SC ..... Segment on/off control data
- BU ..... Normal mode/power-saving mode control data
- W10 to W15, W20 to W25, W30 to W35, W40 to W45, W50 to W55, W60 to W65 ..... PWM data of the PWM output

2. 1/3 duty

(1) When CL is stopped at the low level

• When the display data is transferred

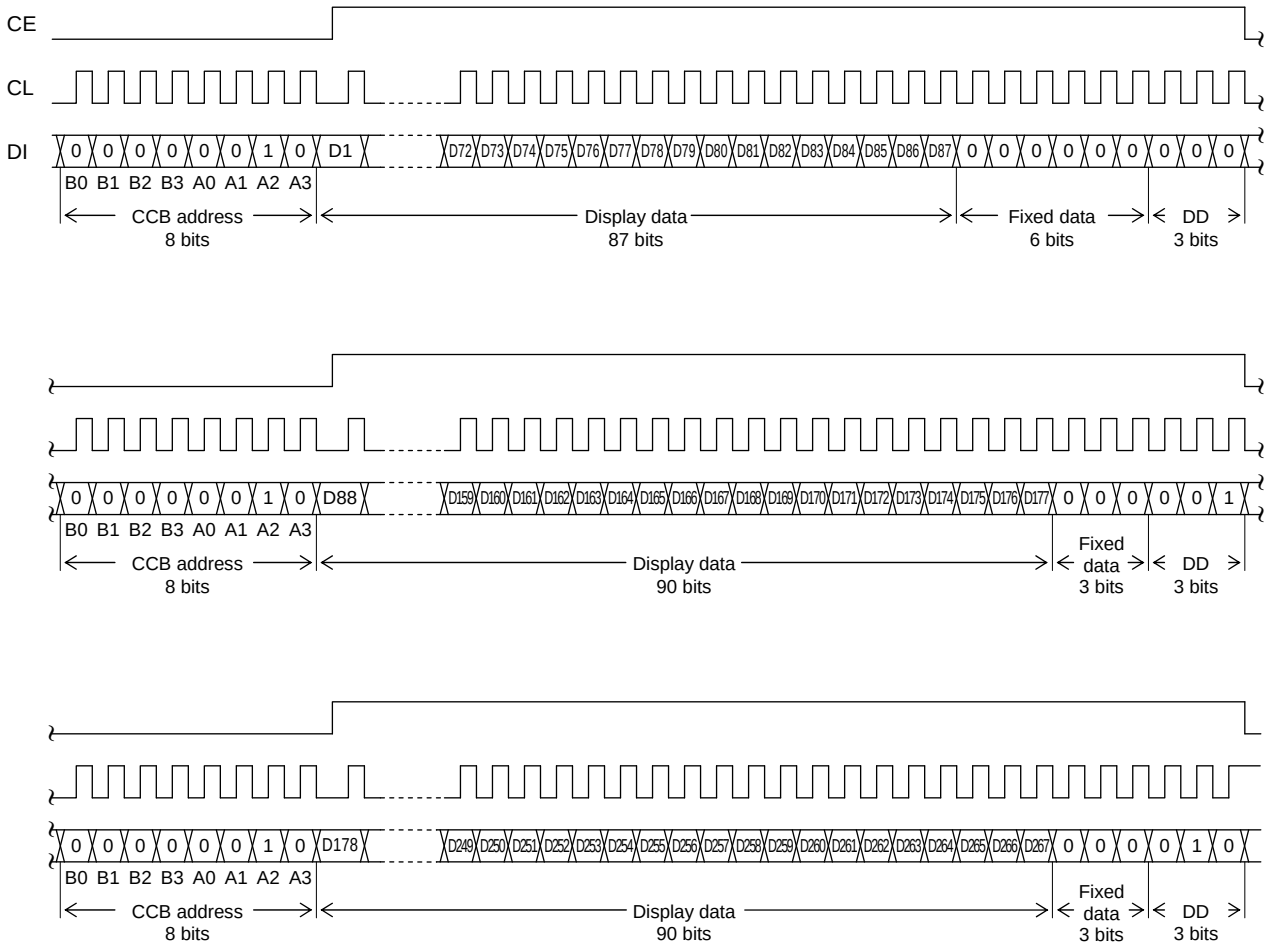

• When the control data is transferred

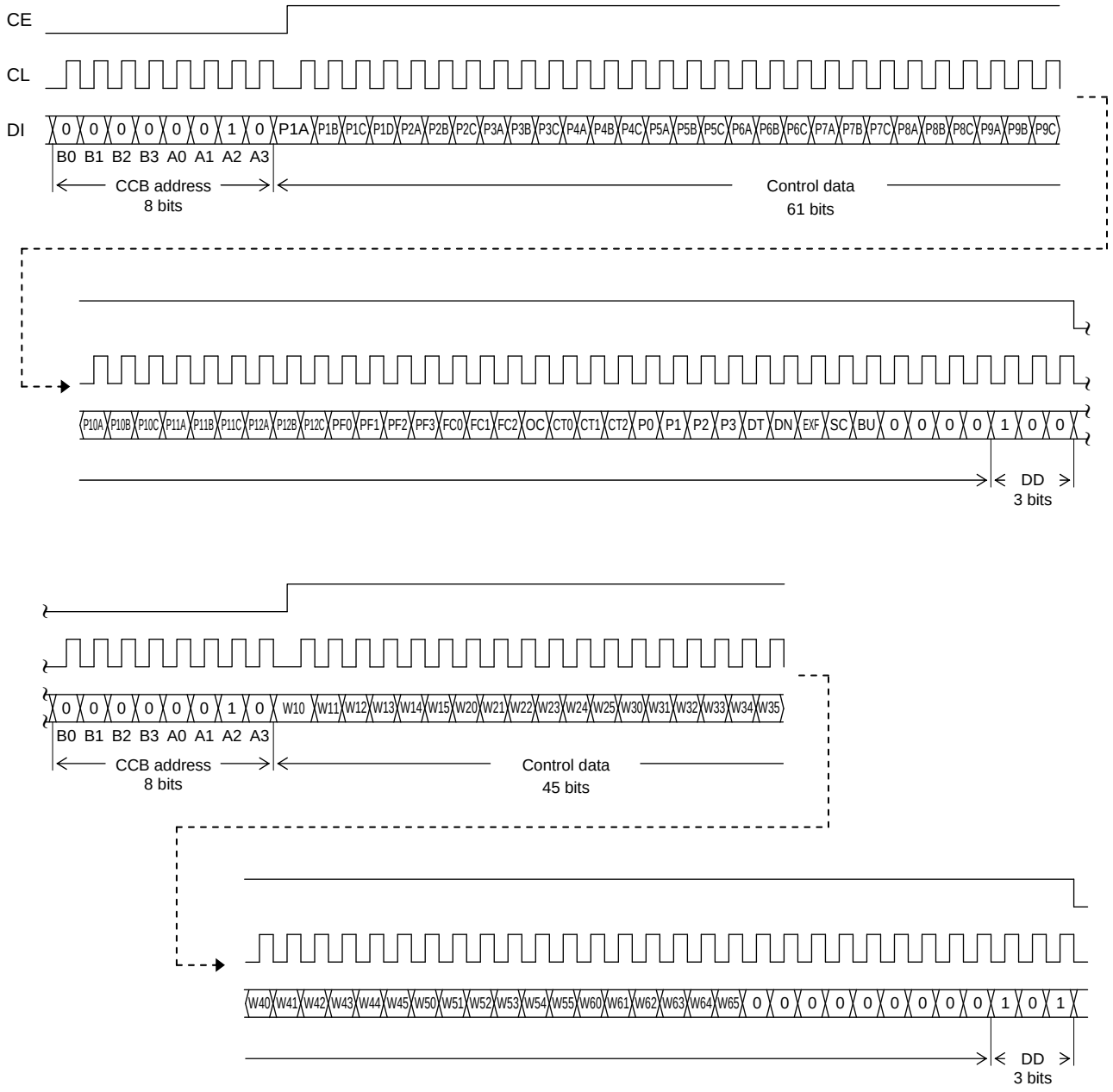

Note: DD is the direction data.

(2) When CL is stopped at the high level

• When the display data is transferred

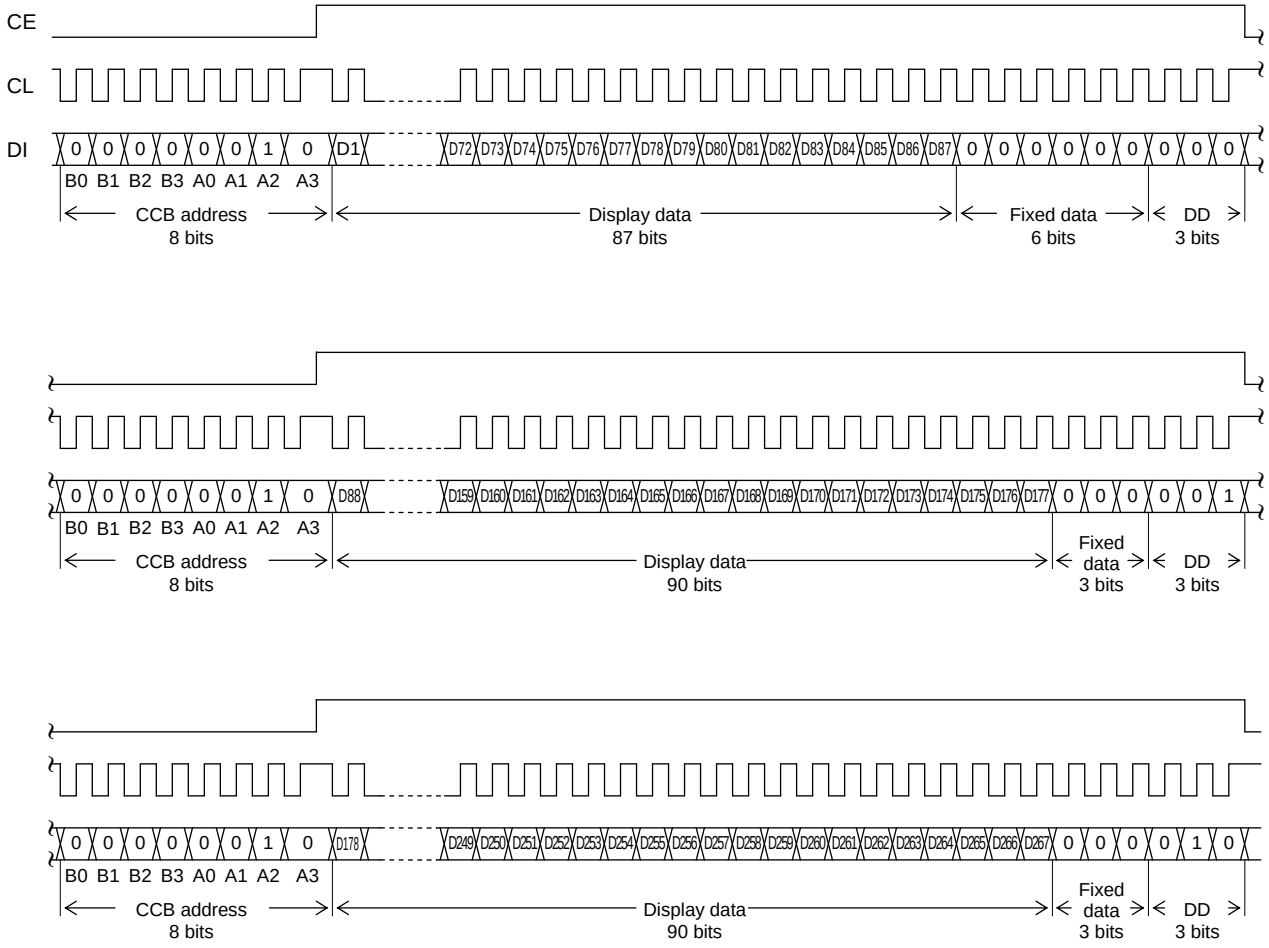

• When the control data is transferred

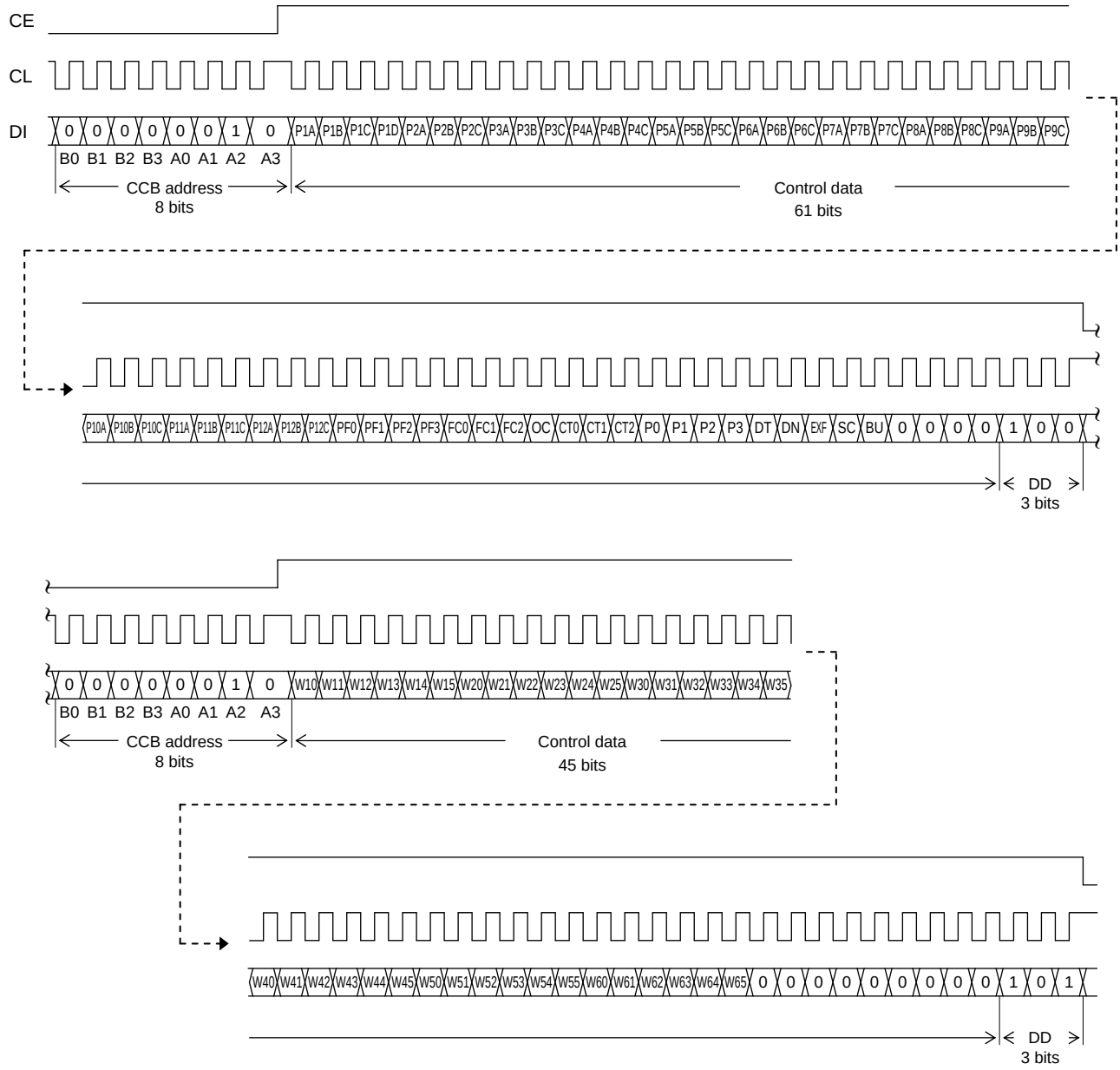

Note: DD is the direction data

- CCB address ..... "40H"
- D1 to D267 ..... Display data
- P1A, P1B, P1C, P1D ..... General-purpose output port (P1) function setting control data
- P2A, P2B, P2C to P12A, P12B, P12C ..... General-purpose output port (P2 to P12) function setting control data
- PF0 to PF3 ..... PWM output waveform frame frequency setting control data
- FC0 to FC2 ..... Common/segment output waveform frame frequency setting control data
- OC ..... Internal oscillator operating mode/external clock operating mode switching control data
- CT0 to CT2 ..... Display contrast setting control data
- P0 to P3 ..... Segment output port/general-purpose output port switching control data
- DT ..... 1/4-duty 1/3-bias drive or 1/3-duty 1/3-bias drive switching control data
- DN ..... S88 pin and S89/OSCI pin state setting control data
- EXF ..... External clock operating frequency setting control data
- SC ..... Segment on/off control data
- BU ..... Normal mode/power-saving mode control data
- W10 to W15, W20 to W25, W30 to W35, W40 to W45, W50 to W55, W60 to W65 ..... PWM data of the PWM output

3. 1/4 duty (Simple mode transfer)

(1) When CL is stopped at the low level

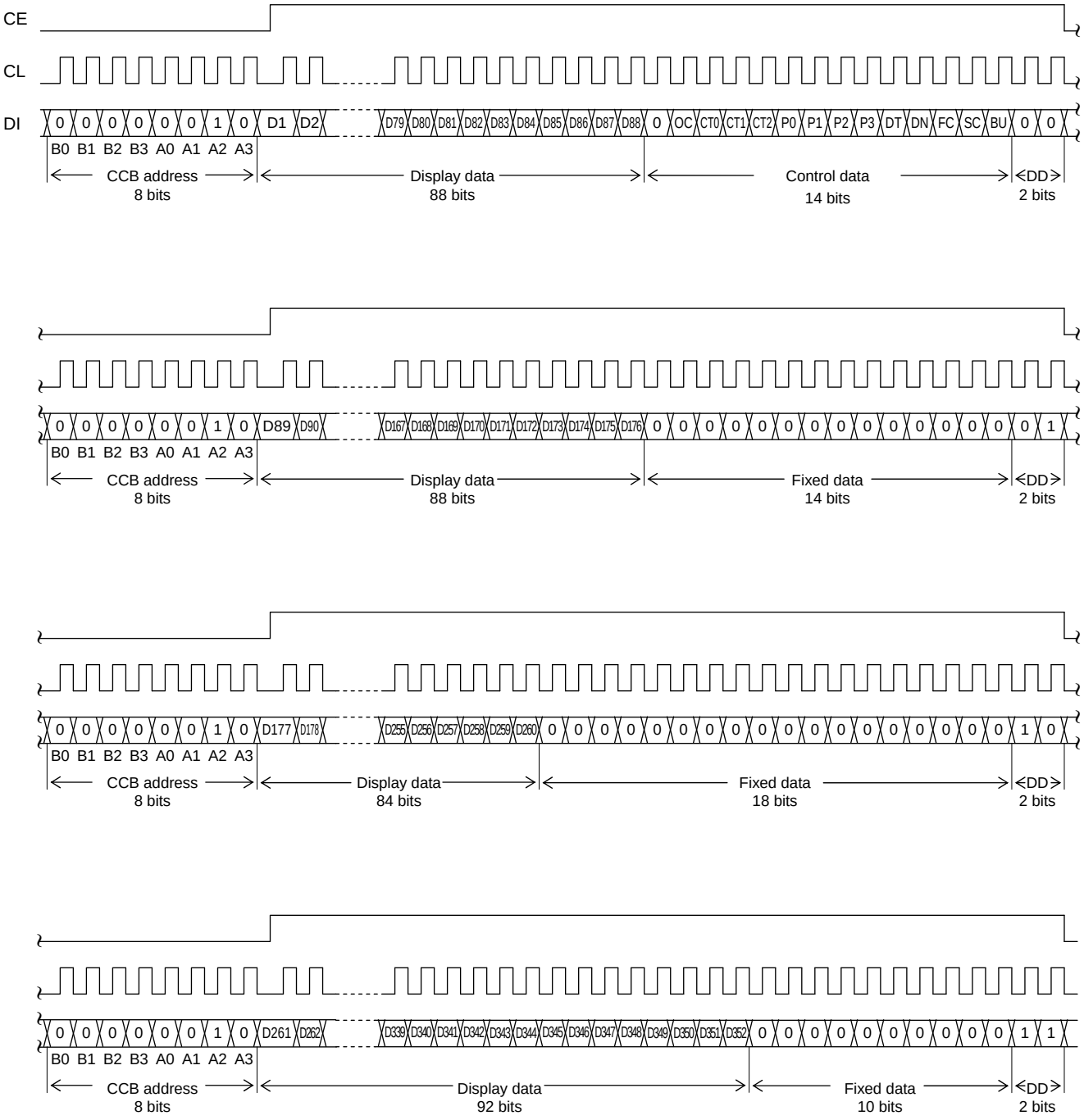

Note: DD is the direction data.

(2) When CL is stopped at the high level

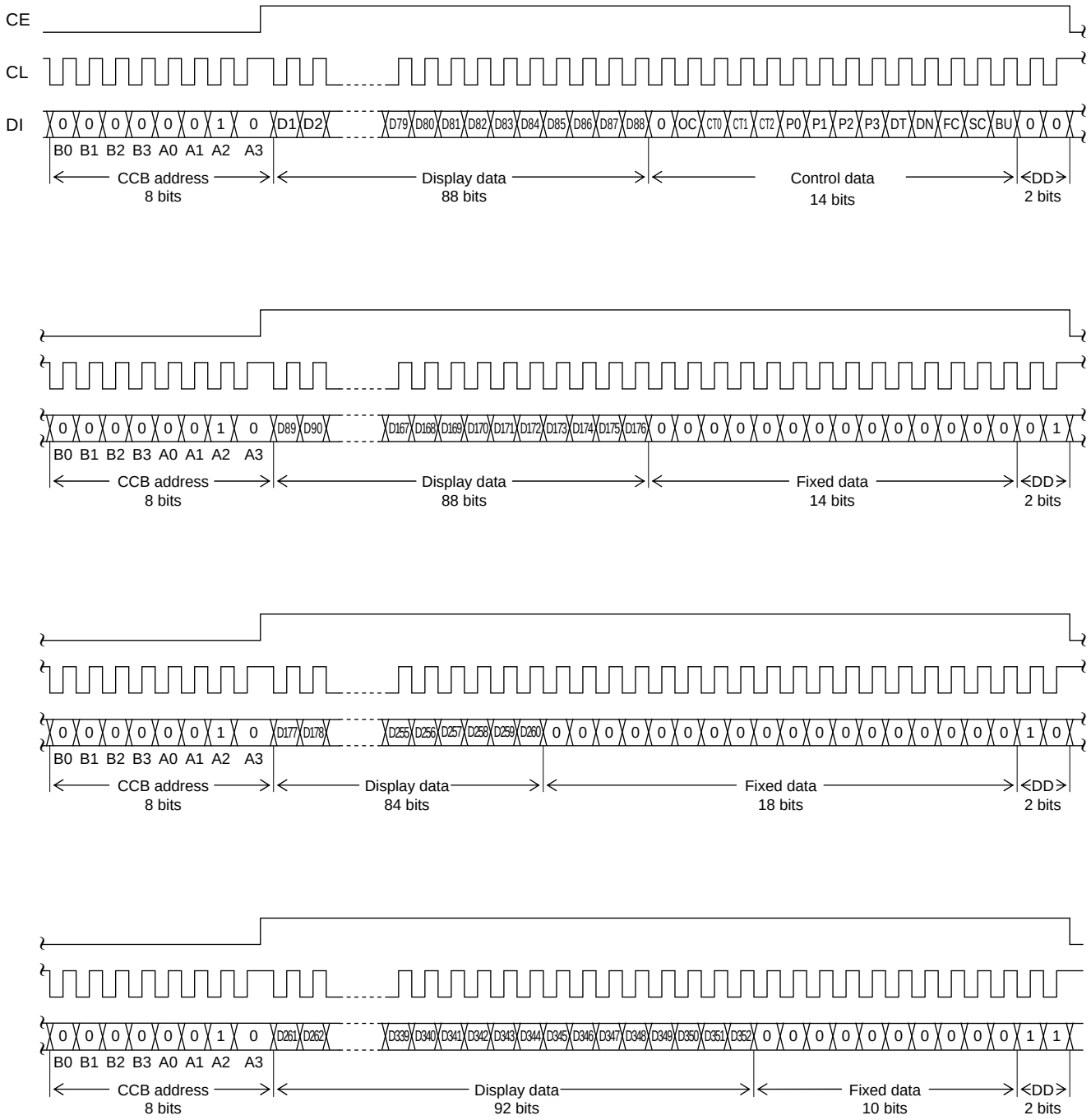

Note: DD is the direction data

- CCB address ..... "40H"
- D1 to D352 ..... Display data
- OC ..... Internal oscillator operating mode/external clock operating mode switching control data
- CT0 to CT2 ..... Display contrast setting control data
- P0 to P3 ..... Segment output port/general-purpose output port switching control data
- DT ..... 1/4-duty 1/3-bias drive or 1/3-duty 1/3-bias drive switching control data
- DN ..... S88 pin and S89/OSCI pin state setting control data
- FC ..... Common/segment output waveform frame frequency setting control data
- SC ..... Segment on/off control data
- BU ..... Normal mode/power-saving mode control data

4. 1/3 duty (Simple mode transfer)

(1) When CL is stopped at the low level

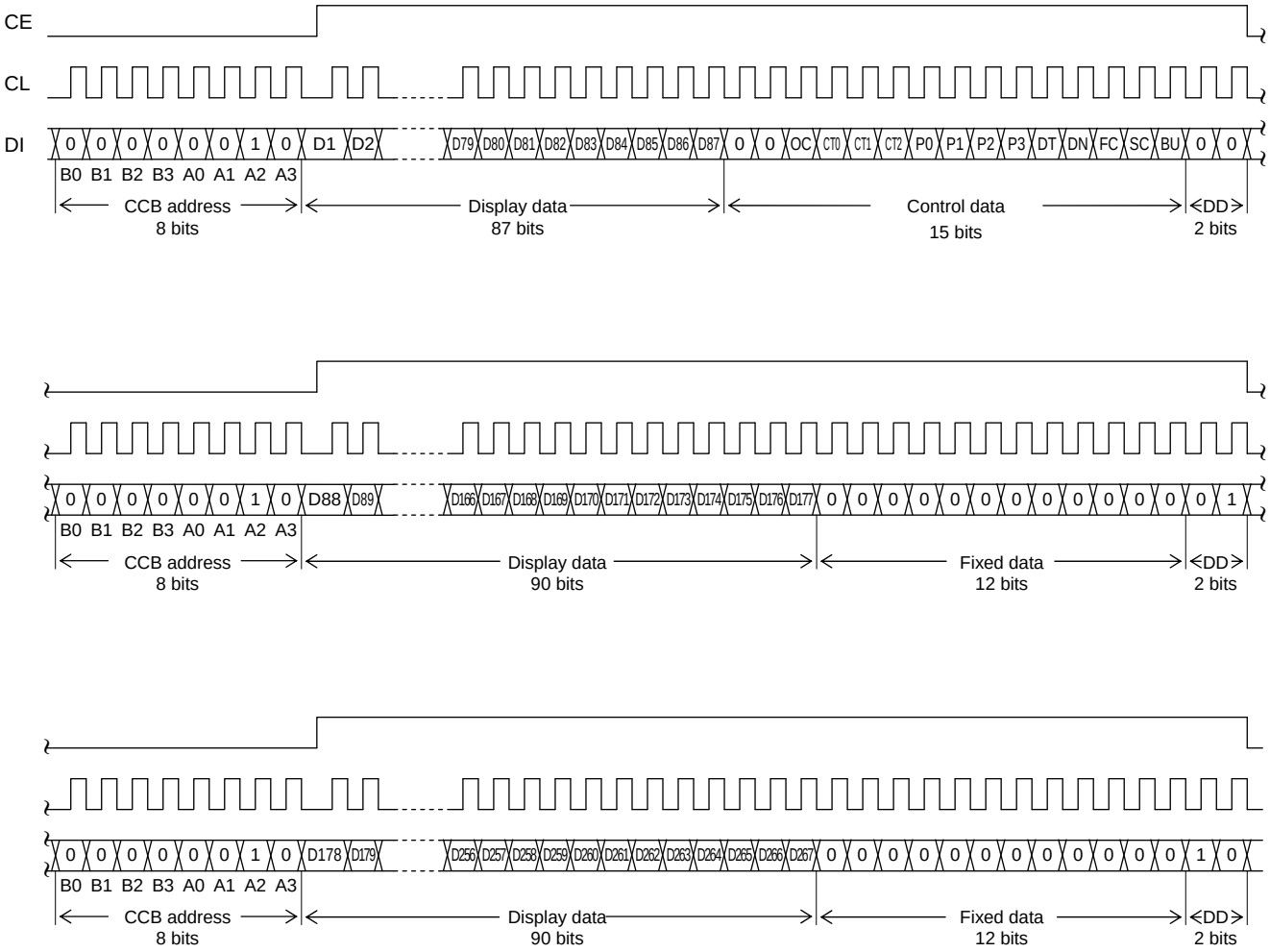

Note: DD is the direction data.

(2) When CL is stopped at the high level

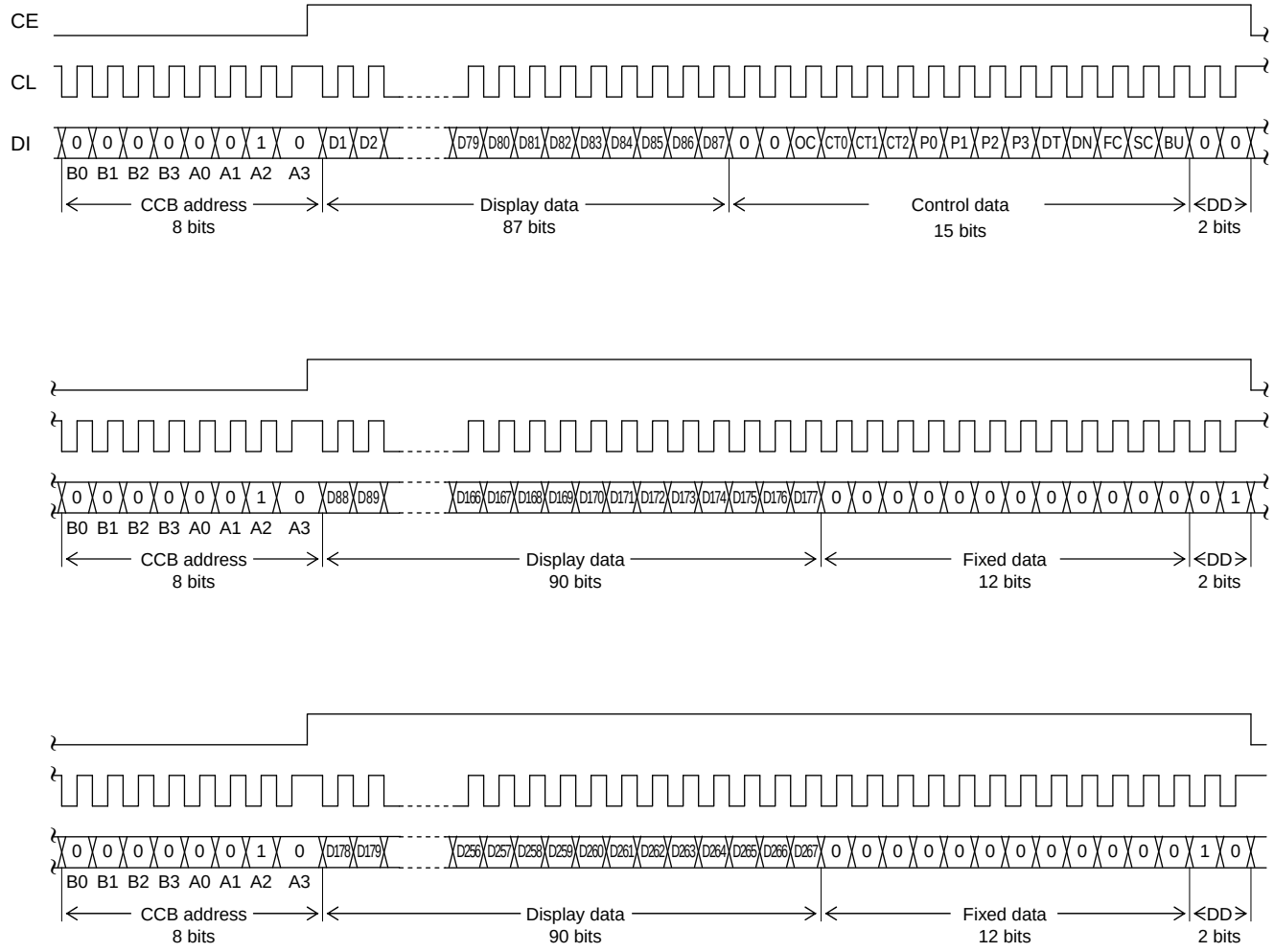

Note: DD is the direction data

- CCB address ..... "40H"
- D1 to D267 ..... Display data
- OC ..... Internal oscillator operating mode/external clock operating mode switching control data
- CT0 to CT2 ..... Display contrast setting control data
- P0 to P3 ..... Segment output port/general-purpose output port switching control data
- DT ..... 1/4-duty 1/3-bias drive or 1/3-duty 1/3-bias drive switching control data
- DN ..... S88 pin and S89/OSCI pin state setting control data
- FC ..... Common/segment output waveform frame frequency setting control data
- SC ..... Segment on/off control data
- BU ..... Normal mode/power-saving mode control data

Serial Data Transfer Example

1. 1/4 duty

- When 261 or more segments are used
  All 496 bits of serial data must be sent.

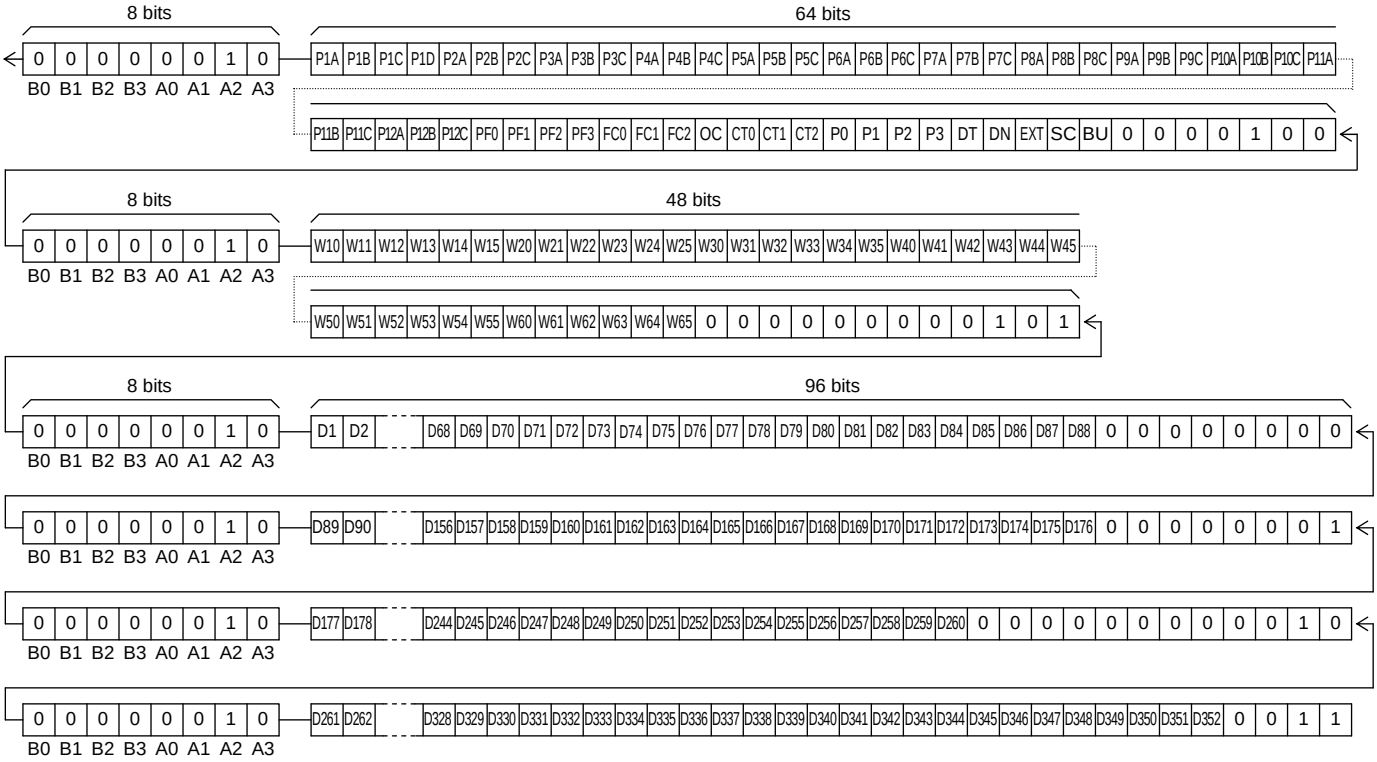

- When fewer than 261 segments are used
  The serial data shown below (the control data) must always be sent.

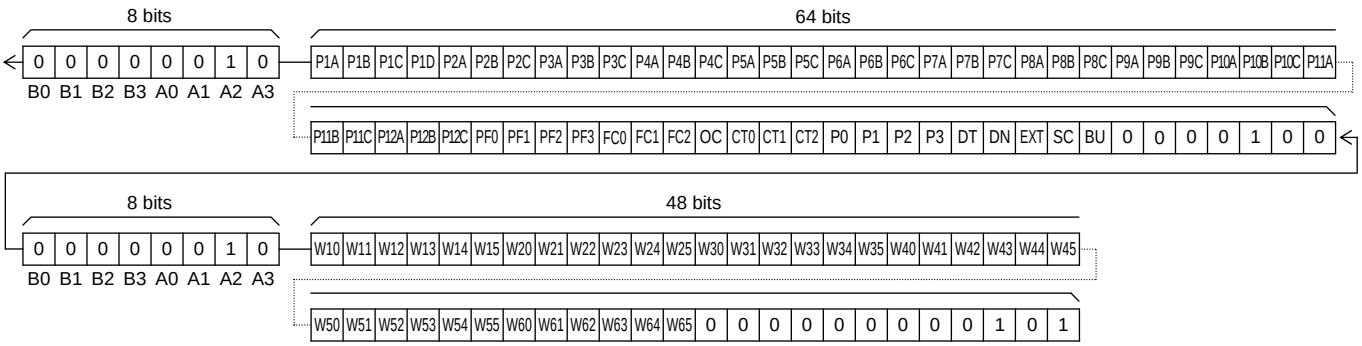

2. 1/3 duty

- When 178 or more segments are used
  All 400 bits of serial data must be sent.

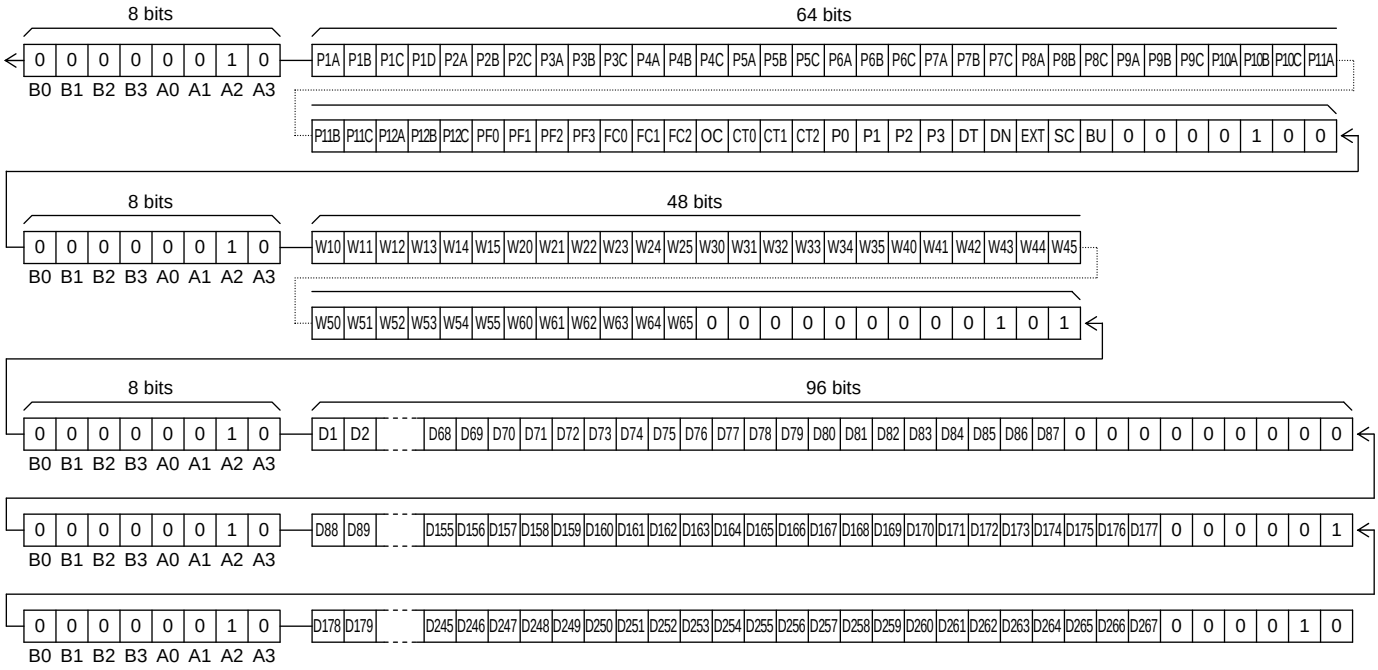

- When fewer than 178 segments are used
  The serial data shown below (the control data) must always be sent.

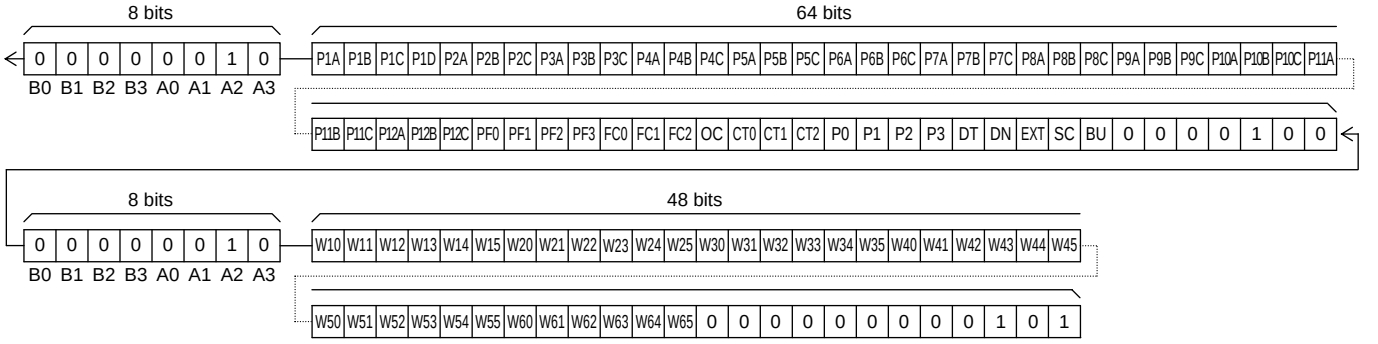

3. 1/4 duty (Simple mode transfer)

- When 261 or more segments are used
  All 416 bits of serial data must be sent.

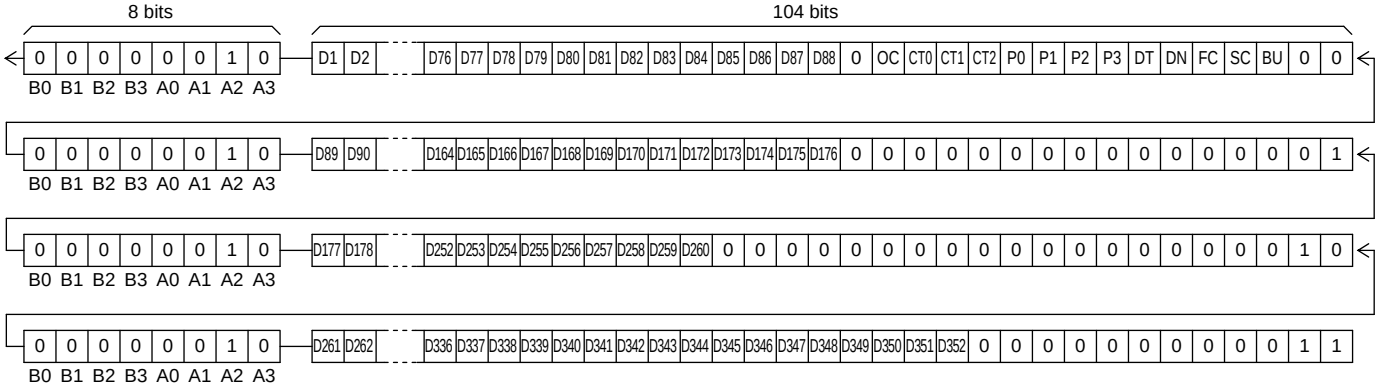

- When fewer than 261 segments are used
  Either 104, 208 or 312 bits of serial data must be sent, depending on the number of segments to be used.
  However, the serial data shown below (the D1 to D88 display data and the control data) must always be sent.

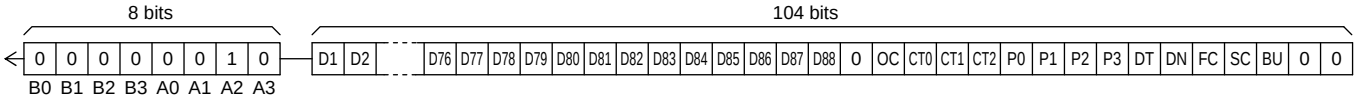

4. 1/3duty (Simple mode transfer)

- When 178 or more segments are used
  All 312 bits of serial data must be sent.

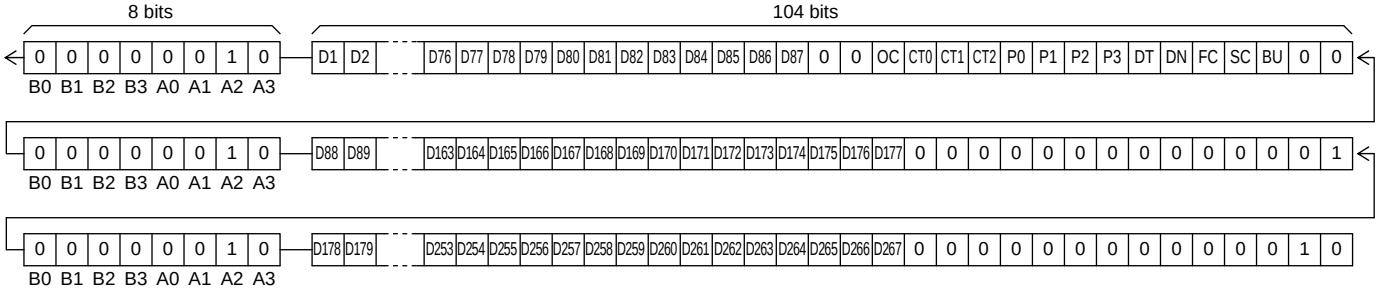

- When fewer than 178 segments are used
  Either 104 or 208 bits of serial data must be sent, depending on the number of segments to be used.
  However, the serial data shown below (the D1 to D87 display data and the control data) must always be sent.

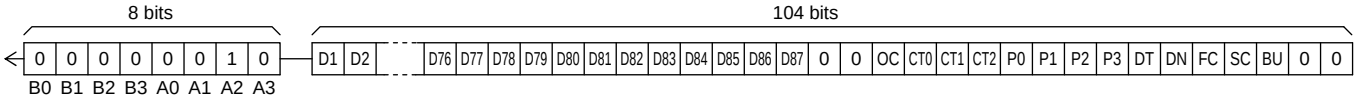

Control Data Functions

(1) P1A,P1B,P1C,P1D ……. General-purpose output port (P1) function setting control data
P2A,P2B,P2C to P12A,P12B,P12C … General-purpose output port (P2 to P12) function setting control data
These control data bits set the general-purpose output function (High or low level output), PWM output function or clock output function of the P1 output pin, and the general-purpose output function (High or low level output) or PWM output function of the P2 to P12 output pins.
However, be careful of being unable to set a PWM output function when the external clock operating frequency is set the $f_{CK}2$=38[kHz]typ (EXF="1") in external clock operating mode (OC= "1").
In addition, be careful of setting of the general-purpose output function (High or low level output) in the case of the simple mode transfer forcibly.

P1A	P1B	P1C	P1D	General-purpose output port (P1) function
0	0	0	0	General-purpose output function (High or low level output)
1	0	0	0	PWM output function (Ch1) (Support for PWM data W10 to W15)
0	1	0	0	PWM output function (Ch2) (Support for PWM data W20 to W25)
1	1	0	0	PWM output function (Ch3) (Support for PWM data W30 to W35)
0	0	1	0	PWM output function (Ch4) (Support for PWM data W40 to W45)
1	0	1	0	PWM output function (Ch5) (Support for PWM data W50 to W55)
0	1	1	0	PWM output function (Ch6) (Support for PWM data W60 to W65)
1	1	1	0	Clock output function (Clock frequency : fosc/2, $f_{CK}/2$)
0	0	0	1	Clock output function (Clock frequency : fosc/8, $f_{CK}/8$)

Note : When are setting (P1A,P1B,P1C,P1D)=(1,X,X,1), (X,1,X,1), and (X,X,1,1), the function of general-purpose output ports P1 is set the general-purpose output function (High or low level output). X: don't care

PnA	PnB	PnC	General-purpose output port (P2 to P12) function
0	0	0	General-purpose output function (High or low level output)
1	0	0	PWM output function (Ch1) (Support for PWM data W10 to W15)
0	1	0	PWM output function (Ch2) (Support for PWM data W20 to W25)
1	1	0	PWM output function (Ch3) (Support for PWM data W30 to W35)
0	0	1	PWM output function (Ch4) (Support for PWM data W40 to W45)
1	0	1	PWM output function (Ch5) (Support for PWM data W50 to W55)
0	1	1	PWM output function (Ch6) (Support for PWM data W60 to W65)

Note1 : The data PnA, PnB and PnC (Note : n=2 to 12) are the control data switching the general-purpose output function or PWM output function of the general-purpose output ports Pn (Note : n=2 to 12).
For example, if the S10/P10 output pin is set the general-purpose output port, the general-purpose output port P10 pin is selected the PWM output function (Ch1)
when (P10A,P10B,P10C)=(1,0,0).

Note2 : When are setting (PnA,PnB,PnC)=(1,1,1) / (Note : n=2 to 12), the function of general-purpose output ports Pn (Note : n=2 to 12) is set the general-purpose output function (High or low level output).

(2) PF0 to PF3 … PWM output waveform frame frequency setting control data

These control data bits set the frame frequency of the PWM output waveforms. However, when the PWM output function isn't used, these control data bits become invalid. In addition, when the external clock operating frequency is set the $f_{CK}2$=38[kHz]typ (EXF="1") in external clock operating mode (OC= "1") or when the serial data transfer is the simple mode transfer, these control data bits become invalid.

Control data				PWM output waveform frame frequency fp[Hz]	
PF0	PF1	PF2	PF3	Internal oscillator operating mode (The control data OC is 0, fosc=300[kHz] typ)	External clock operating mode (The control data OC is 1 and EXF is 0, $f_{CK}1$=300[kHz] typ)
0	0	0	0	fosc/1536	$f_{CK}1$/1536
1	0	0	0	fosc/1408	$f_{CK}1$/1408
0	1	0	0	fosc/1280	$f_{CK}1$/1280
1	1	0	0	fosc/1152	$f_{CK}1$/1152
0	0	1	0	fosc/1024	$f_{CK}1$/1024
1	0	1	0	fosc/896	$f_{CK}1$/896
0	1	1	0	fosc/768	$f_{CK}1$/768
1	1	1	0	fosc/640	$f_{CK}1$/640
0	0	0	1	fosc/512	$f_{CK}1$/512
1	0	0	1	fosc/384	$f_{CK}1$/384
0	1	0	1	fosc/256	$f_{CK}1$/256

Note : When is setting (PF0,PF1,PF2,PF3)=(1,1,0,1) and (X,X,1,1), the frame frequency is same as frame frequency at the time of the (PF0,PF1,PF2,PF3)=(1,0,1,0) setting (fosc/896, $f_{CK}1$/896). X: don't care

(3) FC0 to FC2 … Common/segment output waveform fram frequency control data

These control data bits set the frame frequency of the common and segment output waveforms.

Control data			Common/segment output waveform frame frequency fo[Hz]		
FC0	FC1	FC2	Internal oscillator operating mode (The control data OC is 0, fosc=300[kHz] typ)	External clock operating mode (The control data OC is 1 and EXF is 0, $f_{CK}1$=300[kHz] typ)	External clock operating mode (The control data OC is 1 and EXF is 1, $f_{CK}2$=38[kHz] typ)
0	0	0	fosc/6144	$f_{CK}1$/6144	$f_{CK}2$/768
0	0	1	fosc/4608	$f_{CK}1$/4608	$f_{CK}2$/576
0	1	0	fosc/3072	$f_{CK}1$/3072	$f_{CK}2$/384
0	1	1	fosc/2304	$f_{CK}1$/2304	$f_{CK}2$/288
1	0	0	fosc/1536	$f_{CK}1$/1536	$f_{CK}2$/192
1	0	1	fosc/1152	$f_{CK}1$/1152	$f_{CK}2$/144
1	1	0	fosc/768	$f_{CK}1$/768	$f_{CK}2$/96

Note : When is setting (FC0,FC1,FC2)=(1,1,1), the frame frequency is same as frame frequency at the time of the (FC0,FC1,FC2)=(0,1,0) setting (fosc/3072, $f_{CK}1$/3072, $f_{CK}2$/384).

However, in the case of the simple mode transfer, the frame frequency of the common and segment output waveforms is set as following by the control data FC.

Control data	Common/segment output waveform frame frequency fo[Hz]	
FC	Internal oscillator operating mode (The control data OC is 0, fosc=300[kHz] typ)	External clock operating mode (The control data OC is 1 $f_{CK}1$=300[kHz] typ)
0	fosc/3072	$f_{CK}1$/3072
1	fosc/1536	$f_{CK}1$/1536

(4) OC … Internal oscillator operating mode/external clock operating mode switching control data

This control data bit selects either the internal oscillator operating mode or external clock operating mode.

OC	Fundamental clock operating mode	I/O pin (S89/OSCI) state
0	Internal oscillator operating mode	S89
1	External clock operating mode	OSCI

Note : S89 : Segment output
OSCI : External clock input

(5) CT0 to CT2 … Display contrast setting control data

These control data bits set display contrast.

CT0 to CT2 : Sets the display contrast (7 steps)

CT0	CT1	CT2	LCD drive 3/3 bias voltage $V_{DD}0$ level
0	0	0	$1.00V_{DD}=V_{DD}-(0.05V_{DD}\times0)$
1	0	0	$0.95V_{DD}=V_{DD}-(0.05V_{DD}\times1)$
0	1	0	$0.90V_{DD}=V_{DD}-(0.05V_{DD}\times2)$
1	1	0	$0.85V_{DD}=V_{DD}-(0.05V_{DD}\times3)$
0	0	1	$0.80V_{DD}=V_{DD}-(0.05V_{DD}\times4)$
1	0	1	$0.75V_{DD}=V_{DD}-(0.05V_{DD}\times5)$
0	1	1	$0.70V_{DD}=V_{DD}-(0.05V_{DD}\times6)$

Note : When is setting (CT0,CT1,CT2)=(1,1,1), the LCD drive 3/3 bias voltage $V_{DD}0$ level is $1.00V_{DD}$.

Note that although the display contrast can be adjusted by operating the built-in display contrast adjustment circuit, it can also be adjusted by modifying the supply pin V_{DD} voltage level.

(6) P0 to P3 … Segment output port/general-purpose output port switching control data

These control data bits switch the segment output port/general-purpose output port functions of the S1/P1 to S12/P12 output pins.

Control data				Output pin state											
P0	P1	P2	P3	S1/P1	S2/P2	S3/P3	S4/P4	S5/P5	S6/P6	S7/P7	S8/P8	S9/P9	S10/P10	S11/P11	S12/P12
0	0	0	0	S1	S2	S3	S4	S5	S6	S7	S8	S9	S10	S11	S12
0	0	0	1	P1	S2	S3	S4	S5	S6	S7	S8	S9	S10	S11	S12
0	0	1	0	P1	P2	S3	S4	S5	S6	S7	S8	S9	S10	S11	S12
0	0	1	1	P1	P2	P3	S4	S5	S6	S7	S8	S9	S10	S11	S12
0	1	0	0	P1	P2	P3	P4	S5	S6	S7	S8	S9	S10	S11	S12
0	1	0	1	P1	P2	P3	P4	P5	S6	S7	S8	S9	S10	S11	S12
0	1	1	0	P1	P2	P3	P4	P5	P6	S7	S8	S9	S10	S11	S12
0	1	1	1	P1	P2	P3	P4	P5	P6	P7	S8	S9	S10	S11	S12
1	0	0	0	P1	P2	P3	P4	P5	P6	P7	P8	S9	S10	S11	S12
1	0	0	1	P1	P2	P3	P4	P5	P6	P7	P8	P9	S10	S11	S12
1	0	1	0	P1	P2	P3	P4	P5	P6	P7	P8	P9	P10	S11	S12
1	0	1	1	P1	P2	P3	P4	P5	P6	P7	P8	P9	P10	P11	S12
1	1	0	0	P1	P2	P3	P4	P5	P6	P7	P8	P9	P10	P11	P12

Note1 : Sn(n=1 to 12) : Segment output ports
Pn(n=1 to 12) : General-purpose output ports

Note2 : When are setting (P0,P1,P2,P3)=(1,1,0,1), (1,1,1,0), and (1,1,1,1), the all P1/S1 to P12/S12 output pins selects the segment output port.

The table below lists the correspondence between the display data and the output pins when these pins are selected to be general-purpose output ports (general-purpose output function).

Output pin	Correspondence display data	
	1/4 duty	1/3 duty
S1/P1	D1	D1
S2/P2	D5	D4
S3/P3	D9	D7
S4/P4	D13	D10
S5/P5	D17	D13
S6/P6	D21	D16
S7/P7	D25	D19
S8/P8	D29	D22
S9/P9	D33	D25
S10/P10	D37	D28
S11/P11	D41	D31
S12/P12	D45	D34

For example, if the circuit is operated in 1/4 duty and the S4/P4 output pin is selected to be a general-purpose output port and is set general-purpose output function, the S4/P4 output pin will output a high (V_{DD}) level when the display data D13 is 1, and will output a low (V_{SS}) level when D13 is 0.

(7) DT … 1/4-duty 1/3-bias drive or 1/3-duty 1/3-bias drive switching control data

This control data bit selects either 1/4-duty 1/3-bias drive or 1/3-duty 1/3-bias drive.

DT	Drive scheme	The COM4/S87 pin state
0	1/4-duty 1/3-bias drive	COM4
1	1/3-duty 1/3-bias drive	S87

Note : COM4 : Common output
S87 : Segment output

(8) DN … S88 pin and S89/OSCI pin state setting control data

This control data bit sets state of the S88 pin and the S89/OSCI pin.

DN	Number of display segments		Pin state	
	1/4 duty	1/3 duty	S88	S89/OSCI
0	Up to 344 segments	Up to 261 segments	"L"(V_{SS})	"L"(V_{SS})/OSCI
1	Up to 352 segments	Up to 267 segments	S88	S89/OSCI

Note : "L" (V_{SS}) : Low (V_{SS}) level output
S88 : Segment output
"L" (V_{SS})/OSCI : Low (V_{SS}) level output in internal oscillator operating mode (OC=0)
External clock input in external clock operating mode (OC=1)
S89/OSCI : Segment output in internal oscillator operating mode (OC=0)
External clock input in external clock operating mode (OC=1)

(9) EXF … External clock operating frequency setting control data

This control data bit sets the operating frequency of the external clock which input into the OSCI pin, when the external clock operating mode (OC="1") is set. However, be careful of setting the $f_{CK}1$=300[kHz]typ when the external clock operating mode (OC="1") is set in the case of the simple mode transfer forcibly. In addition, this data is effective only when external clock operating mode (OC= "1") is set.

EXF	External clock operating frequency f_{CK}[kHz]
0	$f_{CK}1$=300[kHz] typ
1	$f_{CK}2$=38[kHz] typ

(10) SC … Segment on/off control data

This control data bit controls the on/off state of the segments.

SC	Display state
0	On
1	Off

Note that when the segments are turned off by setting SC to 1, the segments are turned off by outputting segment off waveforms from the segment output pins.

(11) BU … Normal mode/power-saving mode control data

This control data bit selects either normal mode or power-saving mode.

BU	Mode
0	Normal mode
1	Power saving mode In this mode, the internal oscillator circuit stops oscillation (the S89/OSCI pin is configured for segment output) if the IC is in the internal oscillator operating mode (OC=0) and the IC stops receiving external clock signals (the S89/OSCI pin is configured for external clock input) if the IC is in the external clock operating mode (OC=1). The common and segment output pins go to the V_{SS} level. However, the S1/P1 to S12/P12 output pins can be used as general-purpose output ports under the control of the data bits P0 to P3. (The general-purpose output port P1 to P12 can not be used as PWM output or clock output).

(12) W10 to W15, W20 to W25, W30 to W35 , W40 to W45, W50 to W55, W60 to W65 … PWM data of the PWM output
These control data bits set the pulse width of the PWM output P1 to P12. However, when the PWM output function isn't used, these control data bits become invalid. In addition, when the external clock operating frequency is set the $f_{CK}2$=38[kHz]typ (EXF="1") in external clock operating mode (OC= "1") or when the serial data transfer is the simple mode transfer, these control data bits become invalid.

Wn0	Wn1	Wn2	Wn3	Wn4	Wn5	Pulse width of PWM output
0	0	0	0	0	0	(1/64)×Tp
1	0	0	0	0	0	(2/64)×Tp
0	1	0	0	0	0	(3/64)×Tp
1	1	0	0	0	0	(4/64)×Tp
0	0	1	0	0	0	(5/64)×Tp
1	0	1	0	0	0	(6/64)×Tp
0	1	1	0	0	0	(7/64)×Tp
1	1	1	0	0	0	(8/64)×Tp
0	0	0	1	0	0	(9/64)×Tp
1	0	0	1	0	0	(10/64)×Tp
0	1	0	1	0	0	(11/64)×Tp
1	1	0	1	0	0	(12/64)×Tp
0	0	1	1	0	0	(13/64)×Tp
1	0	1	1	0	0	(14/64)×Tp
0	1	1	1	0	0	(15/64)×Tp
1	1	1	1	0	0	(16/64)×Tp
0	0	0	0	1	0	(17/64)×Tp
1	0	0	0	1	0	(18/64)×Tp
0	1	0	0	1	0	(19/64)×Tp
1	1	0	0	1	0	(20/64)×Tp
0	0	1	0	1	0	(21/64)×Tp
1	0	1	0	1	0	(22/64)×Tp
0	1	1	0	1	0	(23/64)×Tp
1	1	1	0	1	0	(24/64)×Tp
0	0	0	1	1	0	(25/64)×Tp
1	0	0	1	1	0	(26/64)×Tp
0	1	0	1	1	0	(27/64)×Tp
1	1	0	1	1	0	(28/64)×Tp
0	0	1	1	1	0	(29/64)×Tp
1	0	1	1	1	0	(30/64)×Tp
0	1	1	1	1	0	(31/64)×Tp
1	1	1	1	1	0	(32/64)×Tp

Wn0	Wn1	Wn2	Wn3	Wn4	Wn5	Pulse width of PWM output
0	0	0	0	0	1	(33/64)×Tp
1	0	0	0	0	1	(34/64)×Tp
0	1	0	0	0	1	(35/64)×Tp
1	1	0	0	0	1	(36/64)×Tp
0	0	1	0	0	1	(37/64)×Tp
1	0	1	0	0	1	(38/64)×Tp
0	1	1	0	0	1	(39/64)×Tp
1	1	1	0	0	1	(40/64)×Tp
0	0	0	1	0	1	(41/64)×Tp
1	0	0	1	0	1	(42/64)×Tp
0	1	0	1	0	1	(43/64)×Tp
1	1	0	1	0	1	(44/64)×Tp
0	0	1	1	0	1	(45/64)×Tp
1	0	1	1	0	1	(46/64)×Tp
0	1	1	1	0	1	(47/64)×Tp
1	1	1	1	0	1	(48/64)×Tp
0	0	0	0	1	1	(49/64)×Tp
1	0	0	0	1	1	(50/64)×Tp
0	1	0	0	1	1	(51/64)×Tp
1	1	0	0	1	1	(52/64)×Tp
0	0	1	0	1	1	(53/64)×Tp
1	0	1	0	1	1	(54/64)×Tp
0	1	1	0	1	1	(55/64)×Tp
1	1	1	0	1	1	(56/64)×Tp
0	0	0	1	1	1	(57/64)×Tp
1	0	0	1	1	1	(58/64)×Tp
0	1	0	1	1	1	(59/64)×Tp
1	1	0	1	1	1	(60/64)×Tp
0	0	1	1	1	1	(61/64)×Tp
1	0	1	1	1	1	(62/64)×Tp
0	1	1	1	1	1	(63/64)×Tp
1	1	1	1	1	1	(64/64)×Tp

Note : W10 to W15 … PWM data of the PWM output (Ch1)
W20 to W25 … PWM data of the PWM output (Ch2)
W30 to W35 … PWM data of the PWM output (Ch3)
W40 to W45 … PWM data of the PWM output (Ch4)
W50 to W55 … PWM data of the PWM output (Ch5)
W60 to W65 … PWM data of the PWM output (Ch6)

n=1 to 6

$Tp = \frac{1}{fp}$

Display Data and Output Pin Correspondence (1/4 Duty)

Output pin	COM1	COM2	COM3	COM4
S1/P1	D1	D2	D3	D4
S2/P2	D5	D6	D7	D8
S3/P3	D9	D10	D11	D12
S4/P4	D13	D14	D15	D16
S5/P5	D17	D18	D19	D20
S6/P6	D21	D22	D23	D24
S7/P7	D25	D26	D27	D28
S8/P8	D29	D30	D31	D32
S9/P9	D33	D34	D35	D36
S10/P10	D37	D38	D39	D40
S11/P11	D41	D42	D43	D44
S12/P12	D45	D46	D47	D48
S13	D49	D50	D51	D52
S14	D53	D54	D55	D56
S15	D57	D58	D59	D60
S16	D61	D62	D63	D64
S17	D65	D66	D67	D68
S18	D69	D70	D71	D72
S19	D73	D74	D75	D76
S20	D77	D78	D79	D80
S21	D81	D82	D83	D84
S22	D85	D86	D87	D88
S23	D89	D90	D91	D92
S24	D93	D94	D95	D96
S25	D97	D98	D99	D100
S26	D101	D102	D103	D104
S27	D105	D106	D107	D108
S28	D109	D110	D111	D112
S29	D113	D114	D115	D116
S30	D117	D118	D119	D120
S31	D121	D122	D123	D124
S32	D125	D126	D127	D128
S33	D129	D130	D131	D132
S34	D133	D134	D135	D136
S35	D137	D138	D139	D140
S36	D141	D142	D143	D144
S37	D145	D146	D147	D148
S38	D149	D150	D151	D152
S39	D153	D154	D155	D156
S40	D157	D158	D159	D160
S41	D161	D162	D163	D164
S42	D165	D166	D167	D168
S43	D169	D170	D171	D172
S44	D173	D174	D175	D176

Output pin	COM1	COM2	COM3	COM4
S45	D177	D178	D179	D180
S46	D181	D182	D183	D184
S47	D185	D186	D187	D188
S48	D189	D190	D191	D192
S49	D193	D194	D195	D196
S50	D197	D198	D199	D200
S51	D201	D202	D203	D204
S52	D205	D206	D207	D208
S53	D209	D210	D211	D212
S54	D213	D214	D215	D216
S55	D217	D218	D219	D220
S56	D221	D222	D223	D224
S57	D225	D226	D227	D228
S58	D229	D230	D231	D232
S59	D233	D234	D235	D236
S60	D237	D238	D239	D240
S61	D241	D242	D243	D244
S62	D245	D246	D247	D248
S63	D249	D250	D251	D252
S64	D253	D254	D255	D256
S65	D257	D258	D259	D260
S66	D261	D262	D263	D264
S67	D265	D266	D267	D268
S68	D269	D270	D271	D272
S69	D273	D274	D275	D276
S70	D277	D278	D279	D280
S71	D281	D282	D283	D284
S72	D285	D286	D287	D288
S73	D289	D290	D291	D292
S74	D293	D294	D295	D296
S75	D297	D298	D299	D300
S76	D301	D302	D303	D304
S77	D305	D306	D307	D308
S78	D309	D310	D311	D312
S79	D313	D314	D315	D316
S80	D317	D318	D319	D320
S81	D321	D322	D323	D324
S82	D325	D326	D327	D328
S83	D329	D330	D331	D332
S84	D333	D334	D335	D336
S85	D337	D338	D339	D340
S86	D341	D342	D343	D344
S88	D345	D346	D347	D348
S89/OSCI	D349	D350	D351	D352

Note : This table assumes that pins S1/P1 to S12/P12 and S89/OSCI are configured for segment output.

For example, the table below lists the output states for the S21 output pin.

Display data				Output pin (S21) state
D81	D82	D83	D84	
0	0	0	0	The LCD segments corresponding to COM1, COM2, COM3, and COM4 are off.
0	0	0	1	The LCD segment corresponding to COM4 is on.
0	0	1	0	The LCD segment corresponding to COM3 is on.
0	0	1	1	The LCD segment corresponding to COM3 and COM4 are on.
0	1	0	0	The LCD segment corresponding to COM2 is on.
0	1	0	1	The LCD segment corresponding to COM2 and COM4 are on.
0	1	1	0	The LCD segment corresponding to COM2 and COM3 are on.
0	1	1	1	The LCD segments corresponding to COM2, COM3, and COM4 are on.
1	0	0	0	The LCD segment corresponding to COM1 is on.
1	0	0	1	The LCD segment corresponding to COM1 and COM4 are on.
1	0	1	0	The LCD segment corresponding to COM1 and COM3 are on.
1	0	1	1	The LCD segments corresponding to COM1, COM3, and COM4 are on.
1	1	0	0	The LCD segment corresponding to COM1 and COM2 are on.
1	1	0	1	The LCD segments corresponding to COM1, COM2, and COM4 are on.
1	1	1	0	The LCD segments corresponding to COM1, COM2, and COM3 are on.
1	1	1	1	The LCD segments corresponding to COM1, COM2, COM3, and COM4 are on.

Display Data and Output Pin Correspondence (1/3 Duty)

Output pin	COM1	COM2	COM3
S1/P1	D1	D2	D3
S2/P2	D4	D5	D6
S3/P3	D7	D8	D9
S4/P4	D10	D11	D12
S5/P5	D13	D14	D15
S6/P6	D16	D17	D18
S7/P7	D19	D20	D21
S8/P8	D22	D23	D24
S9/P9	D25	D26	D27
S10/P10	D28	D29	D30
S11/P11	D31	D32	D33
S12/P12	D34	D35	D36
S13	D37	D38	D39
S14	D40	D41	D42
S15	D43	D44	D45
S16	D46	D47	D48
S17	D49	D50	D51
S18	D52	D53	D54
S19	D55	D56	D57
S20	D58	D59	D60
S21	D61	D62	D63
S22	D64	D65	D66
S23	D67	D68	D69
S24	D70	D71	D72
S25	D73	D74	D75
S26	D76	D77	D78
S27	D79	D80	D81
S28	D82	D83	D84
S29	D85	D86	D87
S30	D88	D89	D90
S31	D91	D92	D93
S32	D94	D95	D96
S33	D97	D98	D99
S34	D100	D101	D102
S35	D103	D104	D105
S36	D106	D107	D108
S37	D109	D110	D111
S38	D112	D113	D114
S39	D115	D116	D117
S40	D118	D119	D120
S41	D121	D122	D123
S42	D124	D125	D126
S43	D127	D128	D129
S44	D130	D131	D132
S45	D133	D134	D135

Output pin	COM1	COM2	COM3
S46	D136	D137	D138
S47	D139	D140	D141
S48	D142	D143	D144
S49	D145	D146	D147
S50	D148	D149	D150
S51	D151	D152	D153
S52	D154	D155	D156
S53	D157	D158	D159
S54	D160	D161	D162
S55	D163	D164	D165
S56	D166	D167	D168
S57	D169	D170	D171
S58	D172	D173	D174
S59	D175	D176	D177
S60	D178	D179	D180
S61	D181	D182	D183
S62	D184	D185	D186
S63	D187	D188	D189
S64	D190	D191	D192
S65	D193	D194	D195
S66	D196	D197	D198
S67	D199	D200	D201
S68	D202	D203	D204
S69	D205	D206	D207
S70	D208	D209	D210
S71	D211	D212	D213
S72	D214	D215	D216
S73	D217	D218	D219
S74	D220	D221	D222
S75	D223	D224	D225
S76	D226	D227	D228
S77	D229	D230	D231
S78	D232	D233	D234
S79	D235	D236	D237
S80	D238	D239	D240
S81	D241	D242	D243
S82	D244	D245	D246
S83	D247	D248	D249
S84	D250	D251	D252
S85	D253	D254	D255
S86	D256	D257	D258
S87/COM4	D259	D260	D261
S88	D262	D263	D264
S89/OSCI	D265	D266	D267

Note : This table assumes that pins S1/P1 to S12/P12, S87/COM4 and S89/OSCI are configured for segment output.

For example, the table below lists the output states for the S21 output pin.

Display data			Output pin (S21) state
D61	D62	D63	
0	0	0	The LCD segments corresponding to COM1, COM2, and COM3 are off.
0	0	1	The LCD segment corresponding to COM3 is on.
0	1	0	The LCD segment corresponding to COM2 is on.
0	1	1	The LCD segment corresponding to COM2 and COM3 are on.
1	0	0	The LCD segment corresponding to COM1 is on.
1	0	1	The LCD segment corresponding to COM1 and COM3 are on.
1	1	0	The LCD segment corresponding to COM1 and COM2 are on.
1	1	1	The LCD segments corresponding to COM1, COM2, and COM3 are on.

Output waveforms (1/4-Duty 1/3-Bias Drive Scheme)

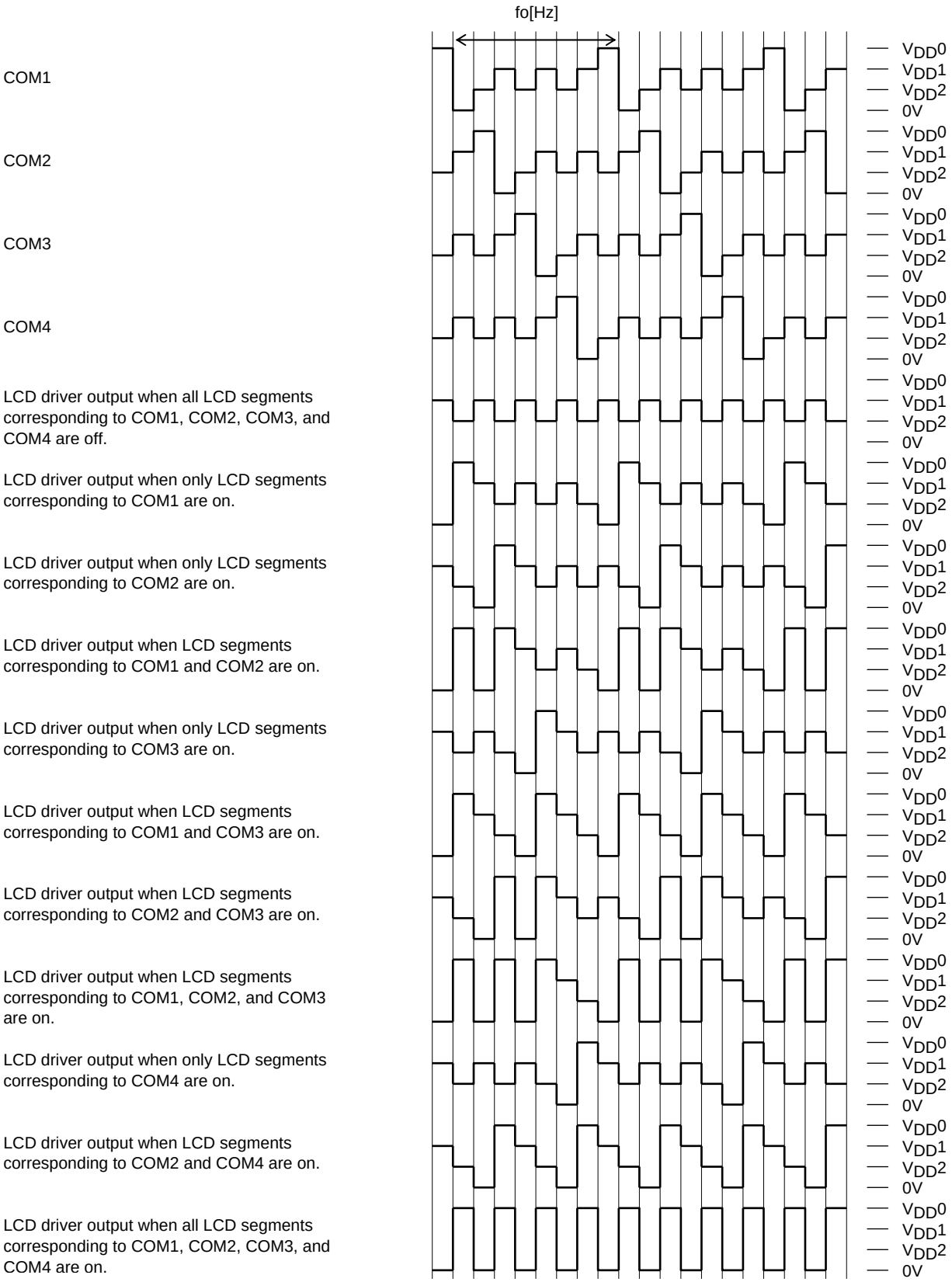

Control data			Common/segment output waveform frame frequency fo[Hz]		
FC0	FC1	FC2	Internal oscillator operating mode (The control data OC is 0, fosc=300[kHz] typ)	External clock operating mode (The control data OC is 1 and EXF is 0, $f_{CK}1$=300[kHz] typ)	External clock operating mode (The control data OC is 1 and EXF is 1, $f_{CK}2$=38[kHz] typ)
0	0	0	fosc/6144	$f_{CK}1/6144$	$f_{CK}2/768$
0	0	1	fosc/4608	$f_{CK}1/4608$	$f_{CK}2/576$
0	1	0	fosc/3072	$f_{CK}1/3072$	$f_{CK}2/384$
0	1	1	fosc/2304	$f_{CK}1/2304$	$f_{CK}2/288$
1	0	0	fosc/1536	$f_{CK}1/1536$	$f_{CK}2/192$
1	0	1	fosc/1152	$f_{CK}1/1152$	$f_{CK}2/144$
1	1	0	fosc/768	$f_{CK}1/768$	$f_{CK}2/96$

Note : When is setting (FC0,FC1,FC2)=(1,1,1), the frame frequency is same as frame frequency at the time of the (FC0,FC1,FC2)=(0,1,0) setting (fosc/3072, $f_{CK}1/3072$, $f_{CK}2/384$).
In addition, if the serial data transfer is the simple mode transfer, the frame frequency is set the fosc/3072 or $f_{CK}1/3072$ when the control data FC is 0, and is set the fosc/1536 or $f_{CK}1/1536$ when FC is 1.

Output waveforms (1/3-Duty 1/3-Bias Drive Scheme)

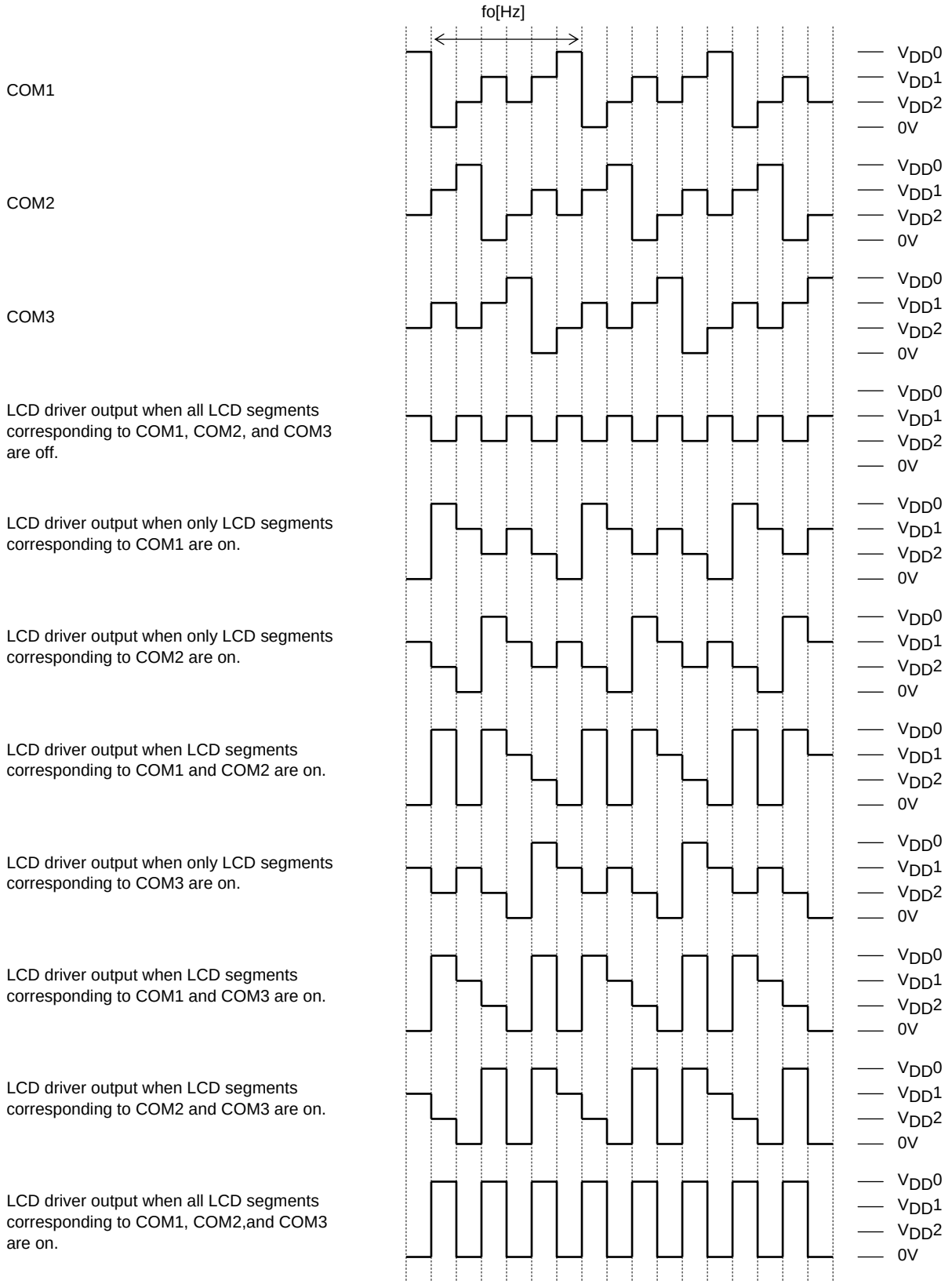

Control data			Common/segment output waveform frame frequency fo[Hz]		
FC0	FC1	FC2	Internal oscillator operating mode (The control data OC is 0, fosc=300[kHz] typ)	External clock operating mode (The control data OC is 1 and EXF is 0, $f_{CK}1$=300[kHz] typ)	External clock operating mode (The control data OC is 1 and EXF is 1, $f_{CK}2$=38[kHz] typ)
0	0	0	fosc/6144	$f_{CK}1/6144$	$f_{CK}2/768$
0	0	1	fosc/4608	$f_{CK}1/4608$	$f_{CK}2/576$
0	1	0	fosc/3072	$f_{CK}1/3072$	$f_{CK}2/384$
0	1	1	fosc/2304	$f_{CK}1/2304$	$f_{CK}2/288$
1	0	0	fosc/1536	$f_{CK}1/1536$	$f_{CK}2/192$
1	0	1	fosc/1152	$f_{CK}1/1152$	$f_{CK}2/144$
1	1	0	fosc/768	$f_{CK}1/768$	$f_{CK}2/96$

Note : When is setting (FC0,FC1,FC2)=(1,1,1), the frame frequency is same as frame frequency at the time of the (FC0,FC1,FC2)=(0,1,0) setting (fosc/3072, $f_{CK}1/3072$, $f_{CK}2/384$).
In addition, if the serial data transfer is the simple mode transfer, the frame frequency is set the fosc/3072 or $f_{CK}1/3072$ when the control data FC is 0, and is set the fosc/1536 or $f_{CK}1/1536$ when FC is 1.

PWM output waveforms

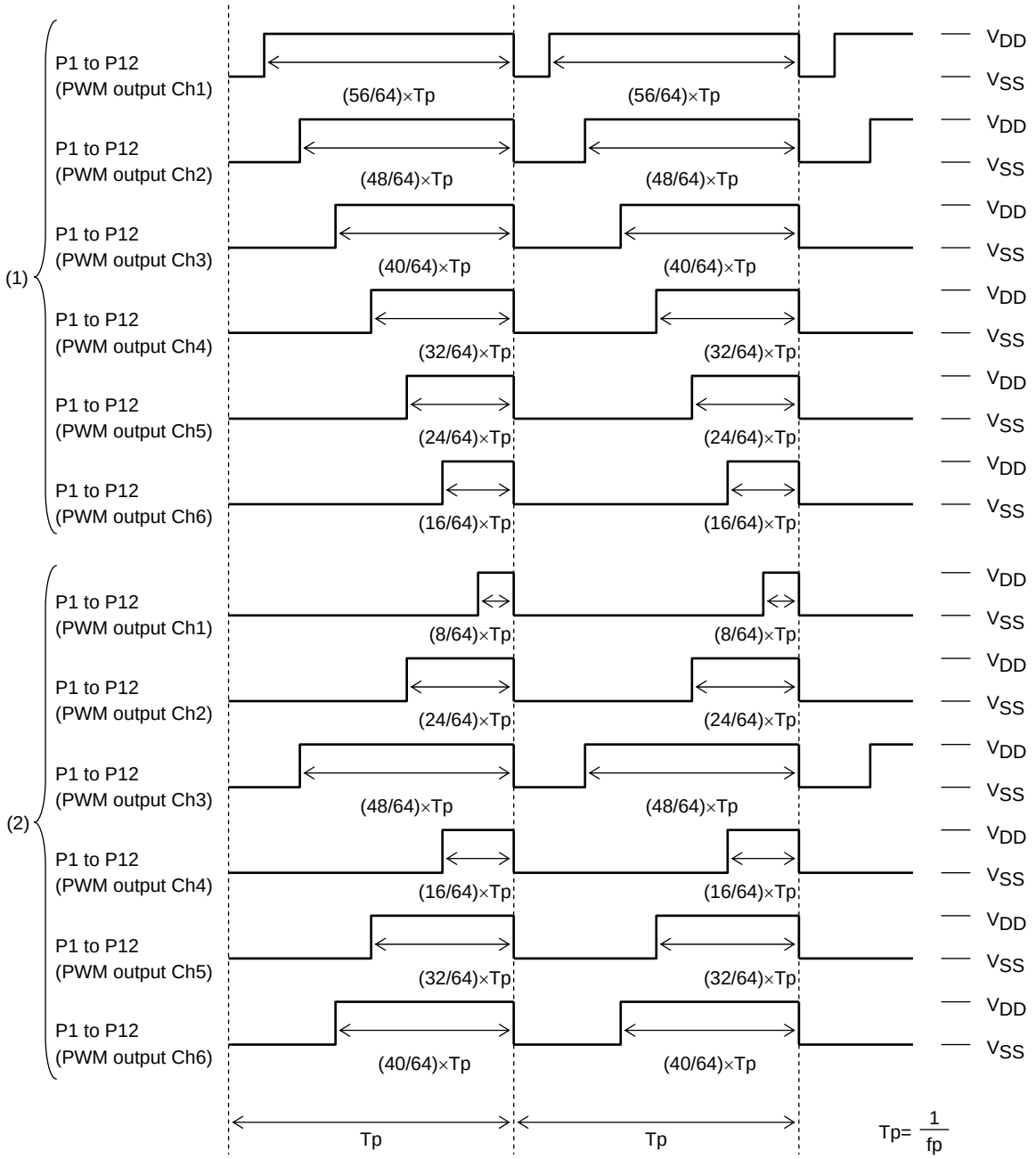

Control data																		PWM output waveforms
PWM output Ch1						PWM output Ch2						PWM output Ch3						
W10	W11	W12	W13	W14	W15	W20	W21	W22	W23	W24	W25	W30	W31	W32	W33	W34	W35	
1	1	1	0	1	1	1	1	1	1	0	1	1	1	1	0	0	1	(1)
1	1	1	0	0	0	1	1	1	0	1	0	1	1	1	1	0	1	(2)

Control data																		PWM output waveforms
PWM output Ch4						PWM output Ch5						PWM output Ch6						
W40	W41	W42	W43	W44	W45	W50	W51	W52	W53	W54	W55	W60	W61	W62	W63	W64	W65	
1	1	1	1	1	0	1	1	1	0	1	0	1	1	1	1	0	0	(1)
1	1	1	1	0	0	1	1	1	1	1	0	1	1	1	0	0	1	(2)

Continued on next page.

Continued from preceding page.

Control data				PWM output waveform frame frequency fp[Hz]	
PF0	PF1	PF2	PF3	Internal oscillator operating mode (The control data OC is 0, fosc=300[kHz] typ)	External clock operating mode (The control data OC is 1 and EXF is 0, f_{CK}1=300[kHz] typ)
0	0	0	0	fosc/1536	f_{CK}1/1536
1	0	0	0	fosc/1408	f_{CK}1/1408
0	1	0	0	fosc/1280	f_{CK}1/1280
1	1	0	0	fosc/1152	f_{CK}1/1152
0	0	1	0	fosc/1024	f_{CK}1/1024
1	0	1	0	fosc/896	f_{CK}1/896
0	1	1	0	fosc/768	f_{CK}1/768
1	1	1	0	fosc/640	f_{CK}1/640
0	0	0	1	fosc/512	f_{CK}1/512
1	0	0	1	fosc/384	f_{CK}1/384
0	1	0	1	fosc/256	f_{CK}1/256

Note: When is setting (PF0,PF1,PF2,PF3)=(1,1,0,1) and (X,X,1,1), the frame frequency is same as frame frequency at the time of the (PF0,PF1,PF2,PF3)=(1,0,1,0) setting (fosc/896, f_{CK}1/896). X: don't care

Clock output waveforms

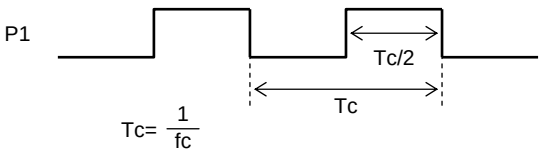

Control data				Clock frequency of clock output P1 fc(=1/Tc)[Hz]
P1A	P1B	P1C	P1D	
1	1	1	0	Clock output function (fosc/2, f_{CK}/2)
0	0	0	1	Clock output function (fosc/8, f_{CK}/8)

Display Control and the $\overline{INH}$ Pin

Since the LSI internal data (1/4 duty : the display data D1 to D352 and the control data, 1/3 duty : the display data D1 to D267 and the control data) is undefined when power is first applied, applications should set the $\overline{INH}$ pin low at the same time as power is applied to turn off the display (This sets the S1/P1 to S12/P12, S13 to S86, COM1 to COM3, COM4/S87, S88, and S89/OSCI pins to the V_{SS} level.) and during this period send serial data from the controller. The controller should then set the $\overline{INH}$ pin high after the data transfer has completed. This procedure prevents meaningless display at power on. (See Figure 5, Figure 6, Figure 7 and Figure 8.)

(1)1/4 duty

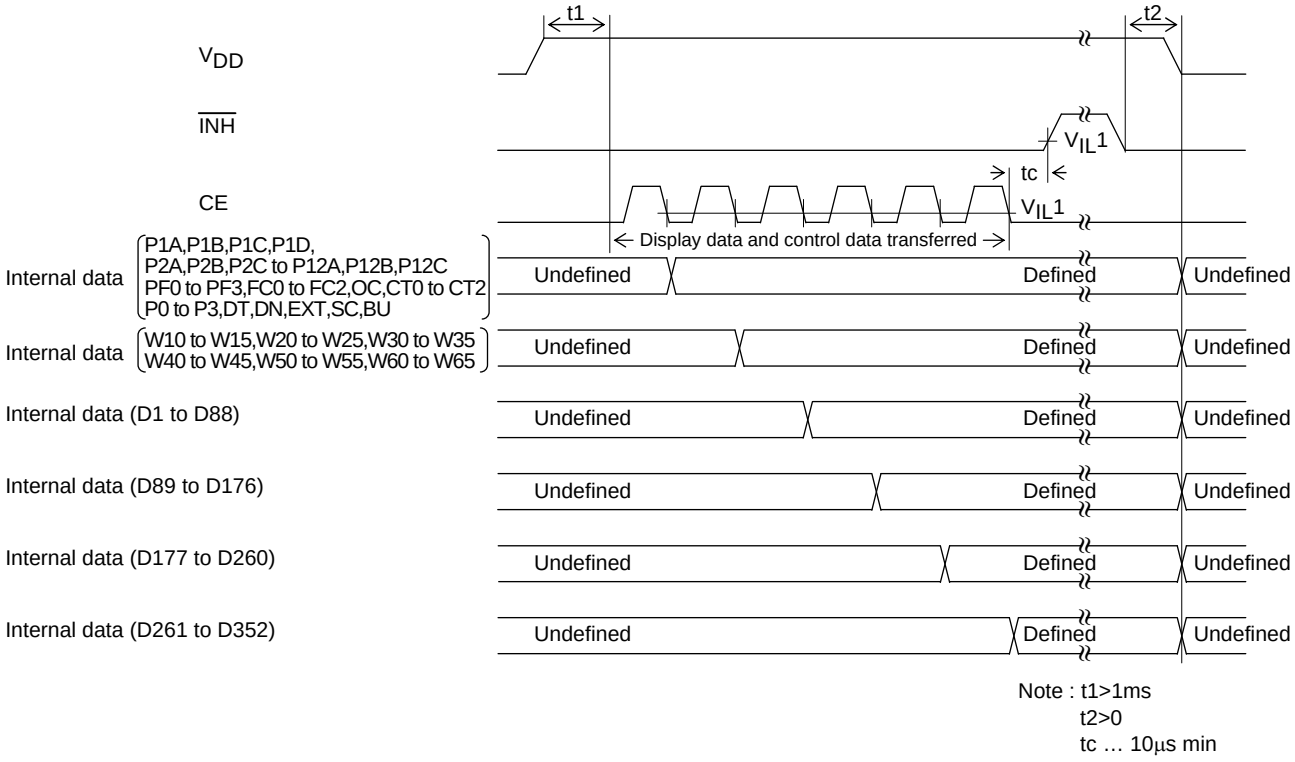

[Figure 5]

(2)1/3 duty

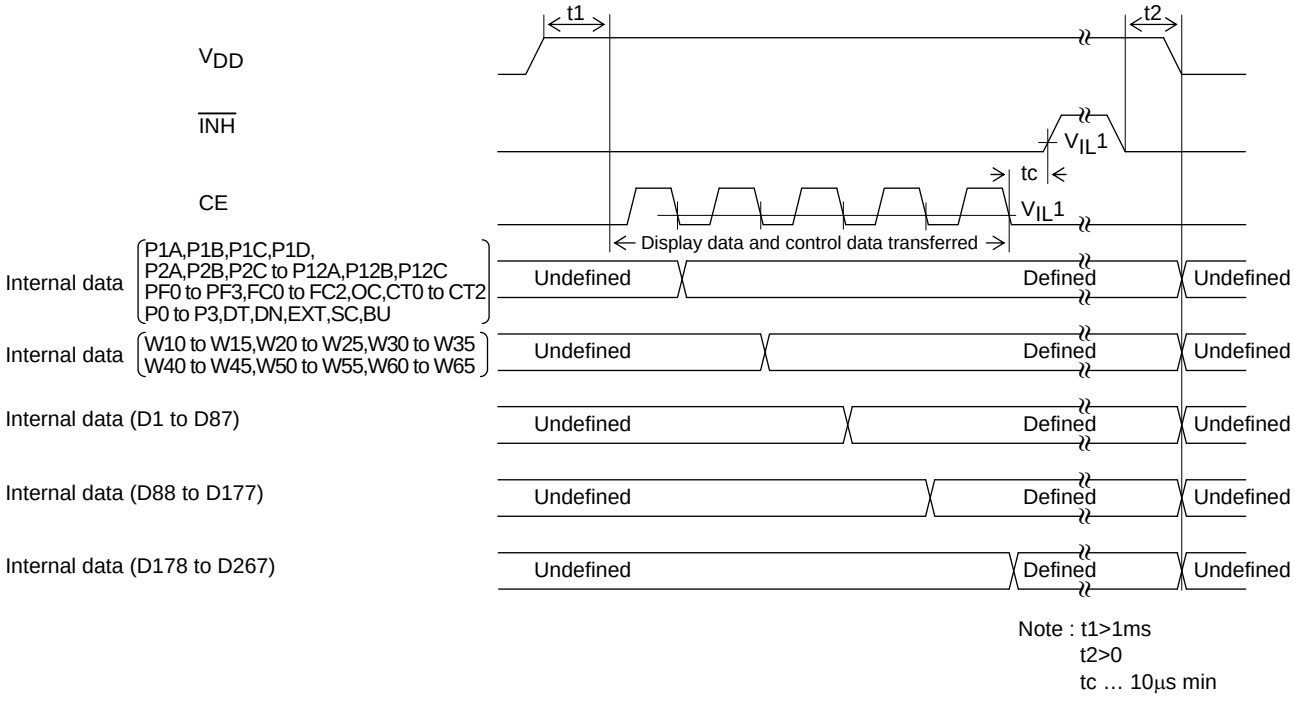

[Figure 6]

(3)1/4 duty (Simple mode transfer)

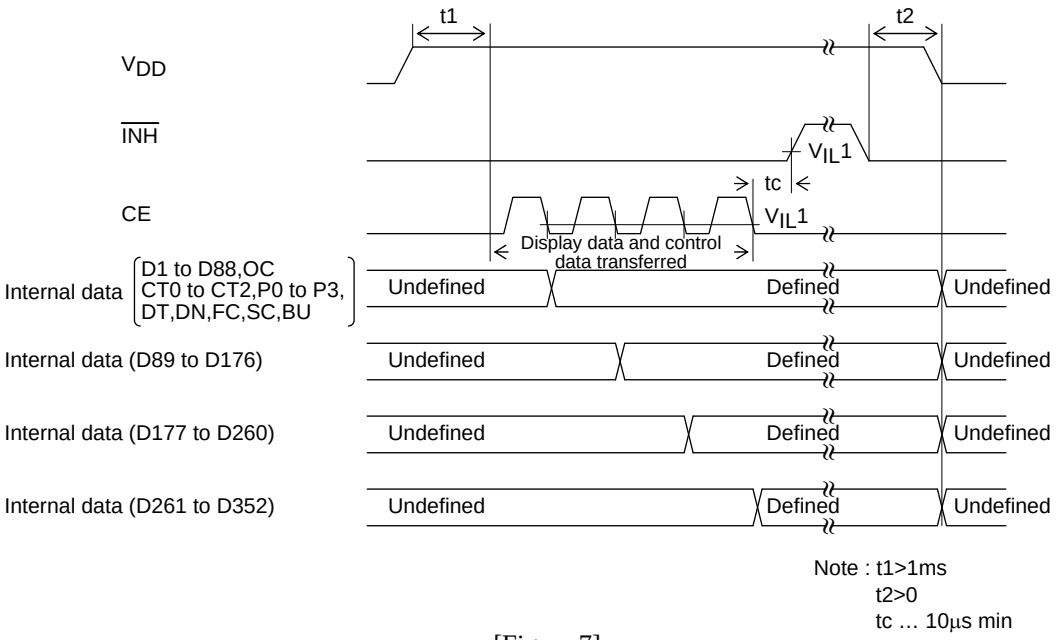

Note : t1>1ms
t2>0
tc … 10μs min

[Figure 7]

(4)1/3 duty (Simple mode transfer)

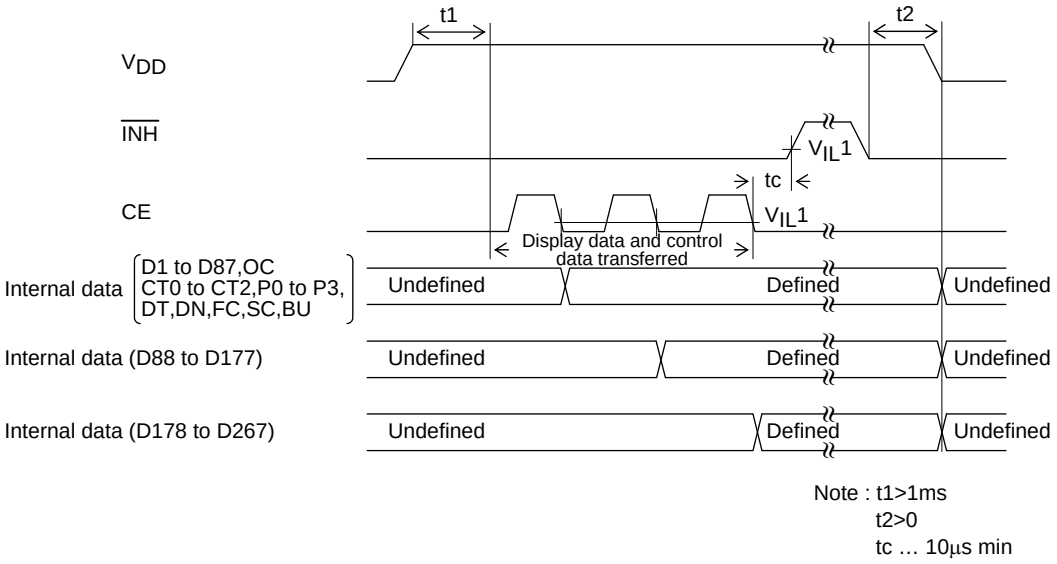

Note : t1>1ms
t2>0
tc … 10μs min

[Figure 8]

Notes on Controller Transfer of Display Data

When using the LC75809PT in 1/4 duty, applications transfer the display data (D1 to D352) in four operations, and in 1/3 duty, they transfer the display data (D1 to D267) in three operations. In either case, applications should transfer all of the display data within 30 ms to maintain the quality of displayed image.

S89/OSCI Pin Peripheral Circuit

(1) Internal oscillator operating mode (control data OC=0)

Connect the S89/OSCI pin to the LCD panel when the internal oscillator operating mode is selected.

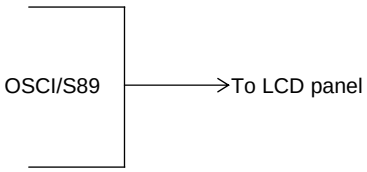

(2) External clock operating mode (control data OC=1)

When the external clock operating mode is selected, insert a current protection resistor Rg (2.2 to 22kΩ) between the S89/OSCI pin and external clock output pin (external oscillator). Determine the value of the resistance according to the allowable current value at the external clock output pin. Also make sure that the waveform of the external clock is not heavily distorted.

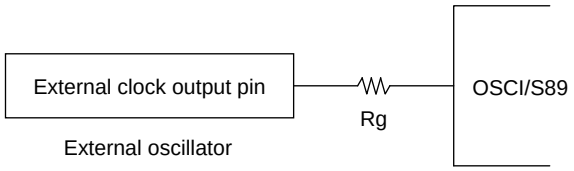

Note : Allowable current value at external clock output pin > $\frac{V_{DD}}{Rg}$

(3) Unused pin treatment

When the S89/OSCI pin is not to be used, select the internal oscillator operating mode (setting control data OC to 0) to keep the pin open.

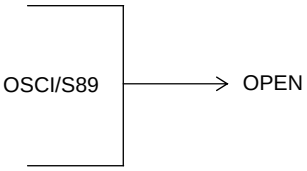

P1 to P12 Pin Peripheral Circuit

It is recommended the circuit shown below be used to adjust the brightness of the LED backlight using the PWM output P1 to P12

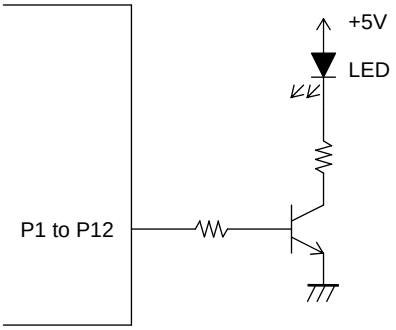

Sample Application Circuit 1

1/4 Duty, 1/3Bias

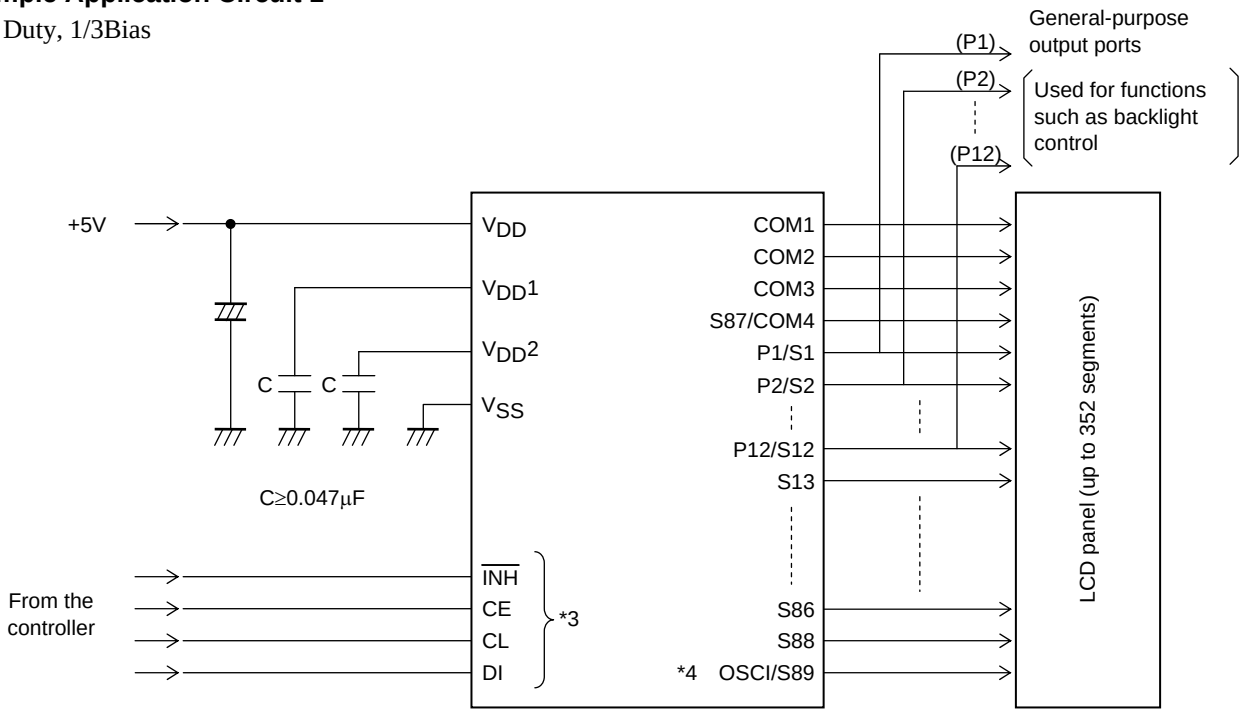

*3 The pins to be connected to the controller (CE, CL, DI, $\overline{INH}$) can handle 3.3 V or 5 V.

*4 Connect the S89/OSCI pin to the LCD panel in the internal oscillator operating mode and insert a current protection resistor Rg (2.2 to 22 kΩ) between the S89/OSCI pin and external clock output pin (external oscillator) in the external clock operating mode (see "S89/OSCI Pin Peripheral Circuit")

Sample Application Circuit 2

1/3 Duty, 1/3 Bias

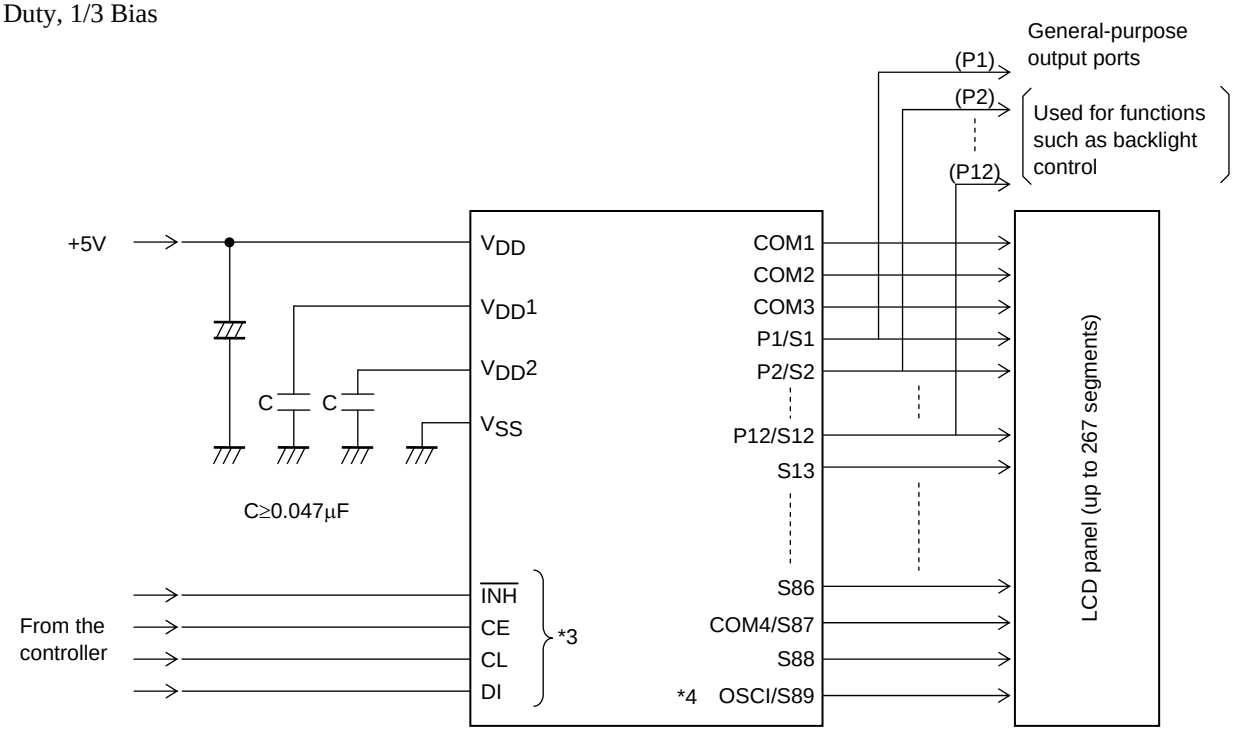

*3 The pins to be connected to the controller (CE, CL, DI, $\overline{INH}$) can handle 3.3 V or 5 V.

*4 Connect the S89/OSCI pin to the LCD panel in the internal oscillator operating mode and insert a current protection resistor Rg (2.2 to 22 kΩ) between the S89/OSCI pin and external clock output pin (external oscillator) in the external clock operating mode (see "S89/OSCI Pin Peripheral Circuit")

ORDERING INFORMATION

Device	Package	Shipping (Qty / Packing)
LC75809PT-H	TQFP100 14x14 / TQFP100 (Pb-Free / Halogen Free)	450 / Tray JEDEC
LC75809PTH-H	TQFP100 14x14 / TQFP100 (Pb-Free / Halogen Free)	90 / Tray JEDEC
LC75809PTS-H	TQFP100 14x14 / TQFP100 (Pb-Free / Halogen Free)	450 / Tray JEDEC

ON Semiconductor and the ON Semiconductor logo are trademarks of Semiconductor Components Industries, LLC dba ON Semiconductor or its subsidiaries in the United States and/or other countries. ON Semiconductor owns the rights to a number of patents, trademarks, copyrights, trade secrets, and other intellectual property. A listing of ON Semiconductor's product/patent coverage may be accessed at www.onsemi.com/site/pdf/Patent-Marking.pdf. ON Semiconductor reserves the right to make changes without further notice to any products herein. ON Semiconductor makes no warranty, representation or guarantee regarding the suitability of its products for any particular purpose, nor does ON Semiconductor assume any liability arising out of the application or use of any product or circuit, and specifically disclaims any and all liability, including without limitation special, consequential or incidental damages. Buyer is responsible for its products and applications using ON Semiconductor products, including compliance with all laws, regulations and safety requirements or standards, regardless of any support or applications information provided by ON Semiconductor. "Typical" parameters which may be provided in ON Semiconductor data sheets and/or specifications can and do vary in different applications and actual performance may vary over time. All operating parameters, including "Typicals" must be validated for each customer application by customer's technical experts. ON Semiconductor does not convey any license under its patent rights nor the rights of others. ON Semiconductor products are not designed, intended, or authorized for use as a critical component in life support systems or any FDA Class 3 medical devices or medical devices with a same or similar classification in a foreign jurisdiction or any devices intended for implantation in the human body. Should Buyer purchase or use ON Semiconductor products for any such unintended or unauthorized application, Buyer shall indemnify and hold ON Semiconductor and its officers, employees, subsidiaries, affiliates, and distributors harmless against all claims, costs, damages, and expenses, and reasonable attorney fees arising out of, directly or indirectly, any claim of personal injury or death associated with such unintended or unauthorized use, even if such claim alleges that ON Semiconductor was negligent regarding the design or manufacture of the part. ON Semiconductor is an Equal Opportunity/Affirmative Action Employer. This literature is subject to all applicable copyright laws and is not for resale in any manner.