Ordering number: EN 4364A

SANYO

No. 4364A

LC6543N/F/L, 6546N/F/L

CMOS LSI
SINGLE-CHIP 4-BIT MICROCOMPUTER FOR SMALL-SCALE CONTROL-ORIENTED APPLICATIONS

Overview

The LC6543N/F/L, LC6546N/F/L belong to our single-chip 4-bit microcomputer LC6500 series fabicated using CMOS process technology and are suited for use in small-scale control-oriented applications. Their basic architecture and instruction set are the same. Application areas include audio equipment (tape deck, player, etc.), office equipment, communications equipment, car equipment, home appliances as well as circuits so far formed with the standard logic circuits and applications where the number of controls is small. The LC6543N/F/L, LC6546N/F/L have relation to the LC6543C/H, LC6546C/H. The C version can be replaced by N version, and the H version by F version (a part of the function is different). The L version is added as a low voltage version. The following show the careful difference of C and N version when you replace C version with N version.

			C version	N version
Operating Temperature			-30°C to +70°C	-40°C to +85°C
1-pin C oscillation			exist	not exist
CF Oscillation Constant	400kHz	MURATA	C1=C2=330pF R=0Ω	C1=C2=220pF R=2.2kΩ
	800kHz	MURATA	C1=C2=220pF R=0Ω	C1=C2=100pF R=2.2KΩ
		KYOCERA	C1=C2=220pF R=0Ω	C1=C2=100pF
	1MHz	MURATA	C1=C2=220pF R=0Ω	C1=C2=100PF R=2.2kΩ

* 2-pin CR fixed-frequency oscillator with small frequency tolerance.
** Other options shown in table on the left.

(Note) The suffix of recommend oscillation is changed C version and N version, but the characteristics are no change.

Features

1) CMOS technology for a low-power operation (with instruction-controlled standby function)
2) ROM/RAM
   LC6543N/F/L ROM : 2K x 8bits, RAM : 128 x 4bits
   LC6546N/F/L ROM : 1K x 8bits, RAM : 64 x 4bits
3) Instruction set : 80 instructions common to the LC6500 series
4) Wide operationg voltage range form 2.2V to 6.0V (L version)
5) Instruction cycle time of 0.92μs (F version)
6) On-chip serial I/O port

Continued on next page.

Information (including circuit diagrams and circuit parameters) herein is for example only; it is not guaranteed for volume production. SANYO believes information herein is accurate and reliable, but no guarantees are made or implied regarding its use or any infringements of intellectual property rights or other rights of third parties.

Specifications and information herein are subject to change without notice.

SANYO Electric Co.,Ltd. Semiconductor Business Headquarters
TOKYO OFFICE Tokyo Bldg., 1-10, 1 Chome, Ueno, Taito-ku, TOKYO, 110 JAPAN

Continued from preceding page.

7) Flexible I/O port
- Number of ports : 7 ports/25 pins max.
- All ports : Input/output common
  Input/output voltage 15V max. (open drain type)
  Output current 20mA max. (sink current) (LED direct drivable)
- Option selectable for your intended system
  A. Open drain output, pull-up resistor : Single-bit select for all ports
  B. Output level at the reset mode : 4-bit select of H/L level for port C/D

8) Interrupt function
Vectored interrupt by timer overflow (instruction-testable)
Vectored interrupt by $\overline{INT}$ pin or completion of transmit/receive at serial I/O port (instruction-testable)

9) Stack level : 4 levels (common with interrupt)

10) Timer : 4-bit prescaler + 8-bit programmable timer

11) Clock oscillation option selectable for your intended system
- Oscillator option : 2-pin RC oscillaion (N, L version)
  2-pin ceramic resonator oscillation, 1-pin external clock input (N,F,L version)
- Predivider option : No predivider, 1/3 predivider, 1/4 predivider (N, L version)

12) Burst pulse (64 x cycle time) output function

Function Table

	Item	LC6543N/46N	LC6543F/46F	LC6543L/46L
Memory	ROM	2048 x 8 bits (43N) 1024 x 8 bits (46N)	2048 x 8 bits (43F) 1024 x 8 bits (46F)	2048 x 8 bits (43L) 1024 x 8 bits (46L)
	RAM	128 x 4 bits (43N) 64 x 4 bits (46N)	128 x 4 bits (43F) 64 x 4 bits (46F)	128 x 4 bits (43L) 64 x 4 bits (46L)
Instruction	Instruction set	80	80	80
	Table read	With	With	With
On-chip function	Interrupt	External 1, Internal 1	External 1, Internal 1	External 1, Internal 1
	Timer	4bit-prescaler + 8-bit timer	4bit-prescaler + 8-bit timer	4bit-prescaler + 8-bit timer
	Stack level	4	4	4
	Standby function	Standby available by HALT instruction	Standby available by HALT instruction	Standby available by HALT instruction
Input/output port	Number of ports	I/O 25 max.	I/O 25 max.	I/O 25 max.
	Serial port	4/8-bit I/O	4/8-bit I/O	4/8-bit I/O
	I/O voltage	15V max.	15V max.	15V max.
	Output current	10mA typ. 20mA max.	10mA typ. 20mA max.	10mA typ. 20mA max.
	I/O circuit configuration	Open drain (N channel) or pull-up resistor-provided output selectable bit by bit.		
	Output level at reset mode	"H" or "L" level selectable port by port (port C, D only)		
	Burst pulse output	Available	Avilable	Avilable
Characteristic	Minimum cycle time	2.77μs (VDD≥4V) 6.0μs (VDD≥3V)	0.92μs (VDD≥4.5V)	3.84μs (VDD≥2.2V)
	Supply voltage	3 to 6V	4.5 to 6V	2.2 to 6V
	Current dissipation	2.5mA typ.	4mA typ.	2.5mA typ.
Oscillation	Resonator	RC (850kHz,400kHz typ.) ceramic (400k,800k,1MHz, 4MHz)	ceramic 4MHz	RC (400kHz typ.) ceramic (400k, 800k, 1MHz, 4MHz)
	predivider option	1/1 ,1/3, 1/4	1/1	1/1, 1/3, 1/4
Other	Package	DIP30 shrink type, MFP30S	DIP30 shrink type, MFP30S	DIP30 shrink type, MFP30S

(Note) Information on the resonator and oscillation circuit constants will be presented as soon as the recommended circuit is determined.

Pin Assignment

Common to DIP • MFP

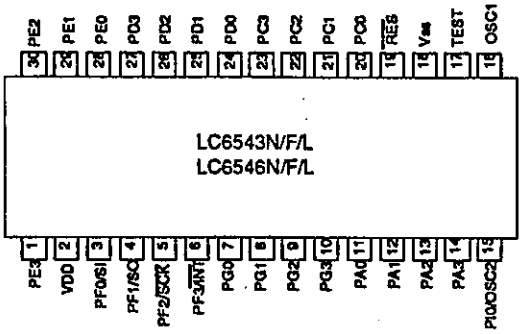

Package Dimensions

3073A (unit : mm)

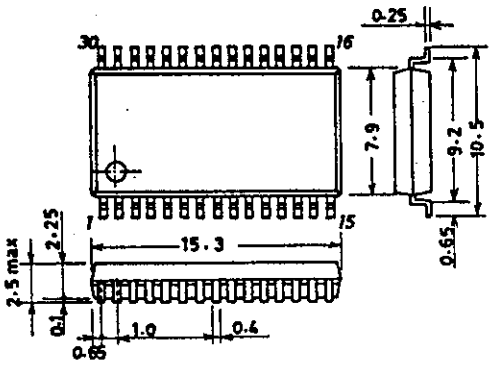

SANYO : MFP30S

3061 (unit : mm)

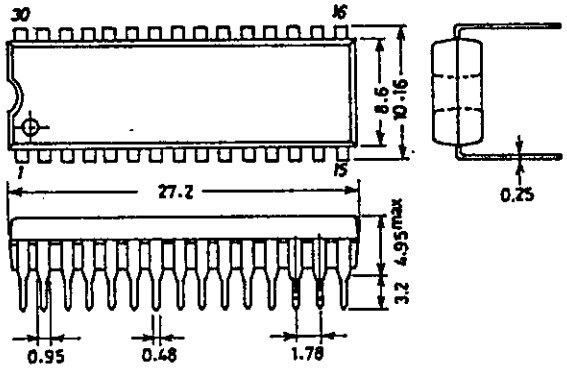

SANYO : DIP30S

Pin Name

OSC1, OSC2	:	C, R or ceramic resonator for OSC	PG 0-3	:	Input/output common port G 0-3
$\overline{RES}$	:	Reset	PI 0	:	Input/output common port I0
PA 0-3	:	Input/output common port A 0-3	TEST	:	Test
PC 0-3	:	Input/output common port C 0-3	$\overline{INT}$	:	Interrupt request pin
PD 0-3	:	Input/output common port D 0-3	SI	:	Serial input pin
PE 0-3	:	Input/output common port E 0-3	SO	:	Serial output pin
PF 0-3	:	Input/output common port F 0-3	$\overline{SCK}$	:	Serial clock input/output pin

(Note)
- The SI, SO, $\overline{SCK}$, and $\overline{INT}$ pins are common to the PF0 to PF3 pins respectively.
- The OSC2 pin and PI0 pin are common to each other, but are mutually exclusive. Either pin user-selectable.

System Block Diagram

LC6543N/F/L, LC6546N/F/L

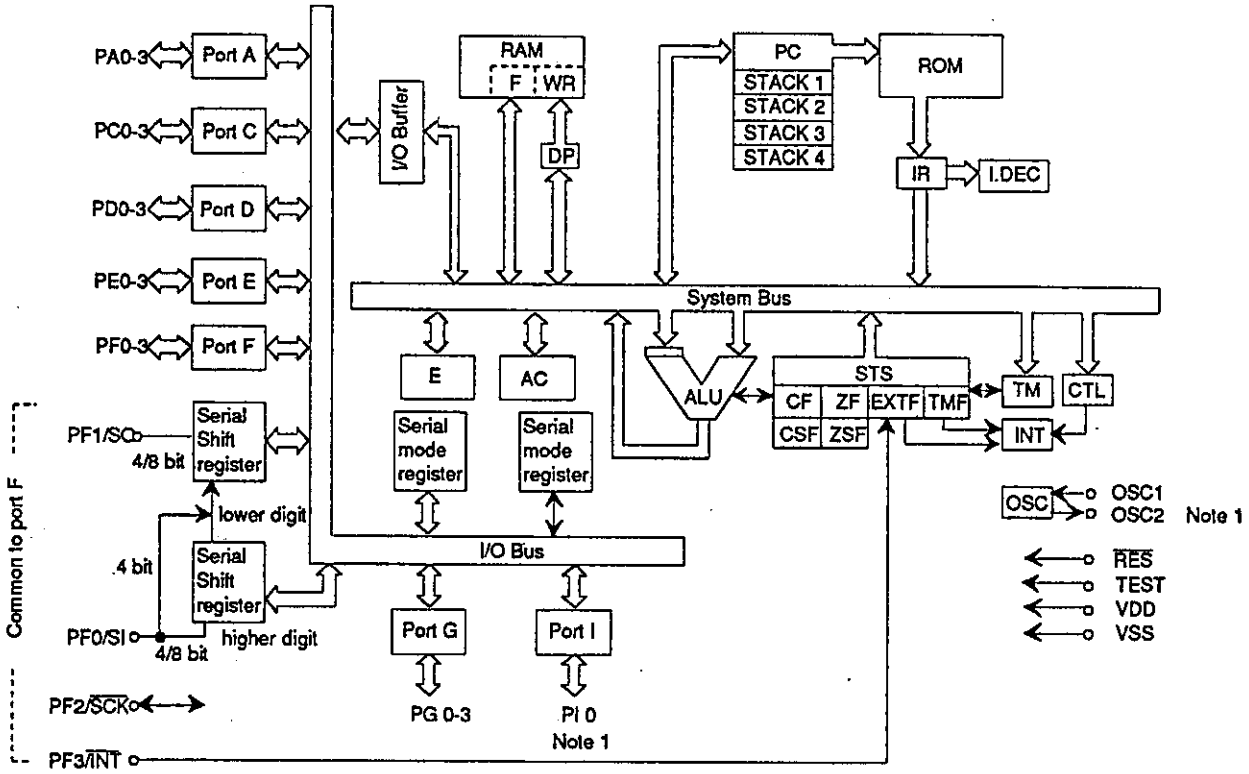

Note 1. The PI0 pin and OSC2 pin are common to each other, but are mutually exclusive. Either pin is user-selectable.

RAM	:	Data memory	ROM	:	Program memory
F	:	Flag	PC	:	Program counter
WR	:	Working register	INT	:	Interrupt control
AC	:	Accumulator	IR	:	Instruction register
ALU	:	Arithmetic and logic unit	I.DEC	:	Instruciton decoder
DP	:	Data pointer	CF,CSF	:	Carry flag, carry save flag
E	:	E register	ZF, ZSF	:	Zero flag, zero save flag
CTL	:	Control register	EXTF	:	External interrupt request flag
OSC	:	Oscillator	TMF	:	Internal interrupt request flag
TM	:	Timer			
STS	:	Status register			

Development Support Tools

The following are available to support the program development for the LC6543, LC6546.

(1) User's Manual

"LC6554 Series User's Manual" No. 21B

(2) Development Tool Manual

For the EVA-410 system, refer to the desciption of Development support tool in "LC6554 Series Use's Manual".
For the EVA-800 system, refer to "EVA-800. LC6554 Series Development Tool Manual".

(3) Development Tools

A. For program development (EVA-410 system)

1. MS-DOS for host system (Note 1)
2. MS-DOS base cross assembler : <LC65S.EXE>
3. Evaluation kit (EVA-410C)
4. Evaluation kit target board (EVA-TB6543/46), evaluation chip (LC6594)

B. For program evaluation

1. New piggyback (LC65PG43/46-A)
   - Small package
   - The socket for pin-to-pin conversion is not required.
   - For detailed information on how to use it, refer to page 32 of this catalog.
2. Piggyback (LC65PG43/46)
   - The socket for pin-to-pin conversion is required.
3. During development EPROM built-in microcomputer (LC65E43)

Note. For notes for program evaluation, do not fail to refer to '5-3-4. Notes when evaluating programs for the LC6543/46' in "LC6554 Series User's Manual".

EVA-410 System

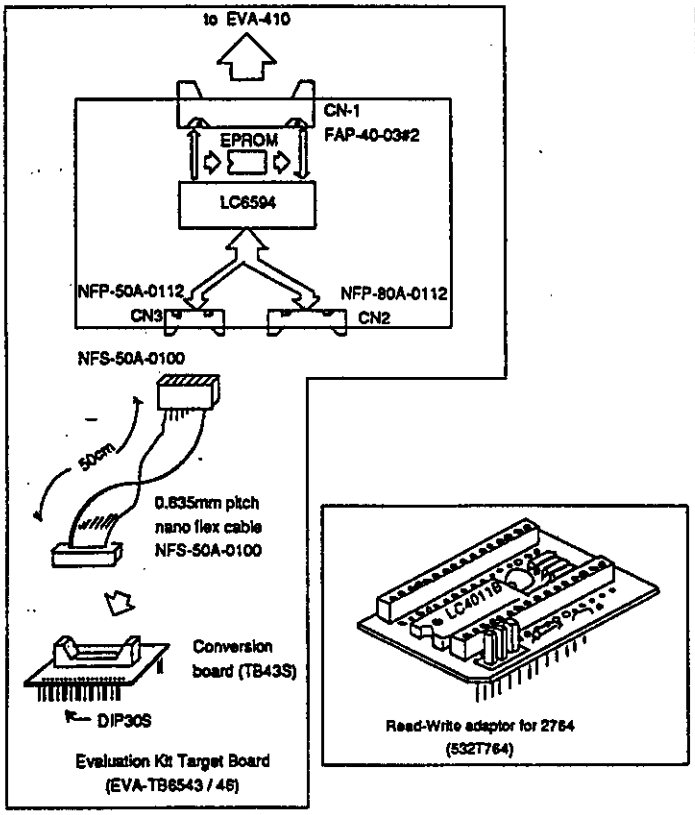

Piggyback

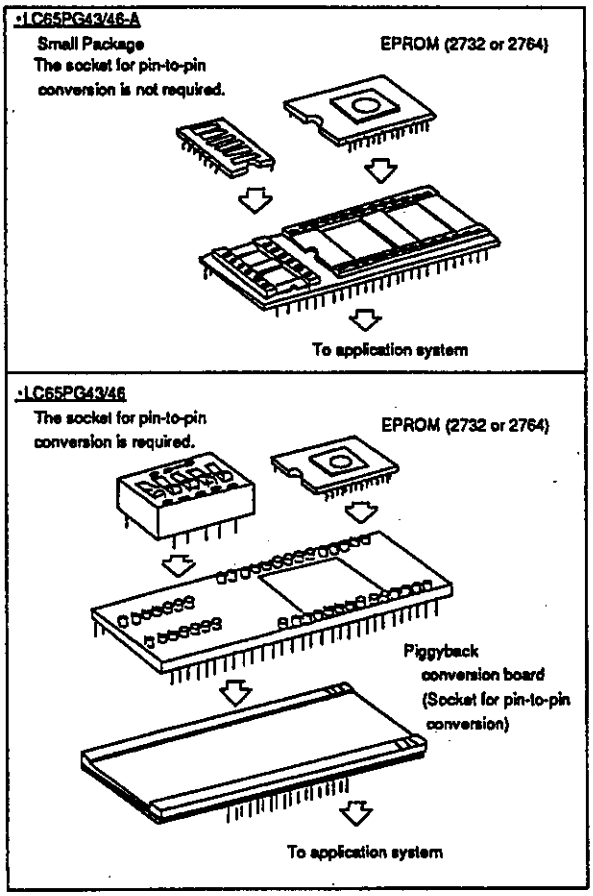

C. For program development (EVA-800 system)

1. MS-DOS for host system (Note 1)
2. Cross assembler.....MS-DOS base cross assembler : <LC65S. EXE>
3. Evaluation chip : LC6594
4. Emulator : EVA-800 emulator and evaluation boards

Appearance of Development Support System

EVA-800 System

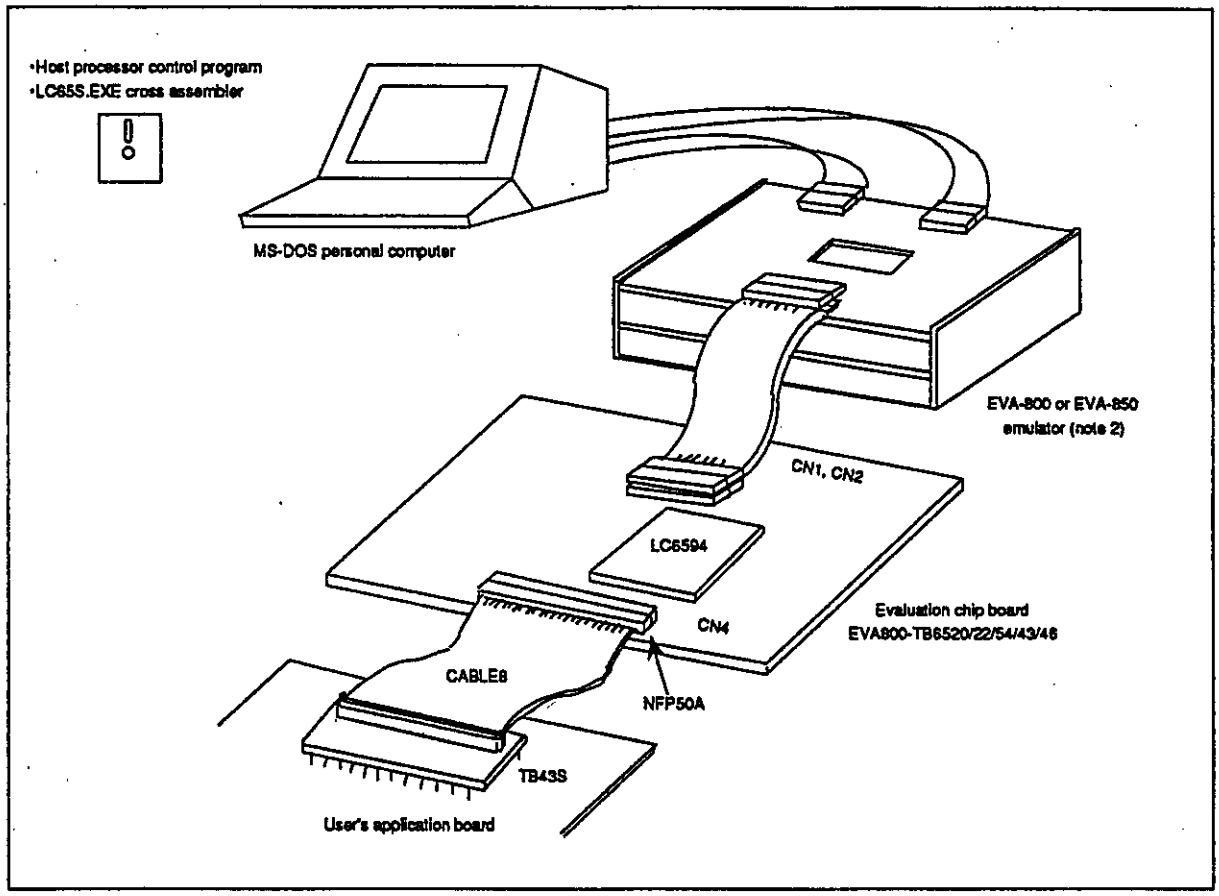

(Note 1) MS-DOS : Tradmark of Microsoft Corporation

(Note 2) The EVA-800 is a general term for emulator. A suffix (A, B,...) is added at the end of EVA-800 as the EVA-800 is improved to be a newer version. Do not use the EVA-800 with no suffix added.

Pin Description

Pin Name	Pins	I/O	Function	Option	Reset Mode
VDD VSS	1 1	— —	Power supply	—	—
OSC1	1	Input	• Pin for externally connecting RC, ceramic resonator for system clock generation. • For 1-pin external clock input, the PI0/OSC2 pin is used as I/O port PI0. • For 2-pin RC OSC, 2-pin ceramic resonator OSC, the PI0/OSC2 pin is used as OSC pin OSC2.	1) 1-pin external clock input 2) 2-pin RC OSC 3) 2-pin ceramic resonator OSC 4) Predivider option 1. No predivider 2. 1/3 predivider 3. 1/4 predivider	—
PA 0 to PA 3	4	Input/ output	• I/O port A0 to 3 4-bit input (IP instruction) 4-bit output (OP instruction) Single-bit decision (BP, BNP instruction) Single-bit set/reset (SPB, RPB instruction) • Standby is controlled by PA3 (or PA0 to 3). • The PA3 (or PA0 to 3) pin must be free from chattering during the HALT instruction execution cycle	1) Open drain type output 2) With pull-up resistor 1), 2) : Specified bit by bit	•"H"output (Output Nch transistor : OFF)
PC 0 to PC 3	4	Input/ output	• I/O port C0 to 3 Same as for PA0 to 3 (Note) • Option permits output at the reset mode to be "H" or "L". (Note) No standby control function is provided.	1) Open drain type output 2) With pull-up resistor 3) Output at reset mode:"H" 4) Output at reset mode:"L" • 1), 2): Specified bit by bit • 3), 4): Specified in a group of 4 bits	• "H" output • "L" output (Option - selectable)
PD 0 to PD 3	4	Input/ output	• I/O port D0 to 3 Same as for PC0 to 3	Same as for PC0 to 3	Same as for PC0 to 3
PE 0 to PE 3	4	Input/ output	• I/O port E0 to 3 4-bit input (IP instruction) 4-bit output (OP instruction) Single-bit set/reset (SPB, RPB instruction) Single-bit decision (BP, BNP instruction) • PE0 : With burst pulse (64Tcyc) output function	1) Open drain type output 2) With pull-up resistor 1), 2) : Specified bit by bit	•"H"output (Output Nch transistor : OFF)

Pin Name	Pins	I/O	Function	Option	Reset Mode
PF 0 / SI PF 1 / SO PF 2 / $\overline{SCK}$ PF 3 / $\overline{INT}$	4	Input/ output	• I/O port F0 to 3 Same as for PE0 to 3 (Note) • PF0 to 3 : Common with serial interface, $\overline{INT}$ input. Progaram-selectable SI •••• Serial input port SO ••• Serial output port $\overline{SCK}$ •• Serial clock input/output $\overline{INT}$ •••Interrupt request input 4-bit/8-bit serial input/output is program-selectable. (Note) No burst pulse output function is provided.	Same as for PE0 to 3	Same as for PE0 to 3 Serial port : Disable Interrupt source: $\overline{INT}$
PG 0 to PG 3	4	Input/ output	• I/O port G0 to 3 Same as for PE0 to 3 (Note) (Note) No burst pulse output function is provided.	Same as for PE0 to 3	Same as for PE0 to 3
PI 0 / OSC2	1	Input-output/ output	• I/O port I0 Same as for PG0 to 3 • Single-bit configuration • For 2-pin OSC, this pin is used as the OSC2 pin, providing no function as I/O port.	Same as for PG0 to 3	Same as for PG0 to 3
$\overline{RES}$	1	Input	• Systen reset input • For power-up reset, C is connected externally. • For reset restart, "L" level is applied for 4 clock cycles or more.		
TEST	1	Input	• LSI test pin Normally connected to VSS		

Oscillator circuit option

Option Name	Circuit	Conditions, etc.
1. External clock	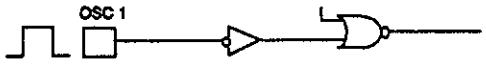	The PI 0 / OSC2 pin is used as port PI0.
2. 2-pin RC OSC	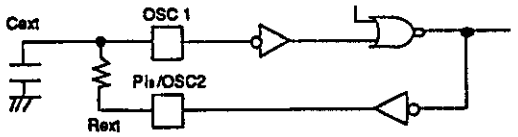	The PI 0 / OSC2 pin is used as OSC pin OSC2, providing no function as port.
3. Ceramic resonator OSC	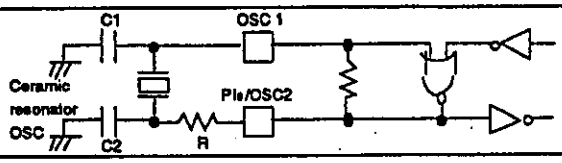	The PI 0 / OSC2 pin is used as OSC pin OSC2, providing no function as port.

Predivider Option

Option Name	Circuit	Conditions, etc.
1. No predivider (1/1)		• Applicable to all of 3 OSC options. • The OSC frequency, external clock do not exceed 1444kHz. (LC6543N, 6546N) • The OSC frequency, external clock do not exceed 4330kHz. (LC6543F, 6546F) • The OSC frequency, external clock do not exceed 1040kHz. (LC6543L, 6546L)
2. 1/3 predivider	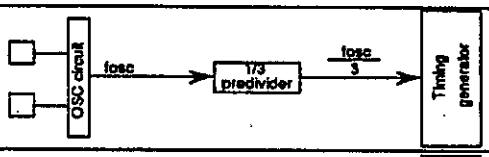	• Applicatable to only 2 OSC options of external clock, ceramic resonator OSC. • The OSC frequency, external clock do not exceed 4330kHz.
3. 1/4 predivider	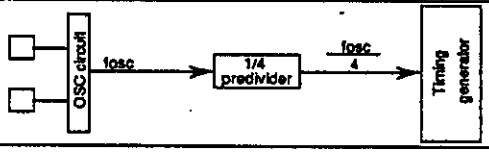	• Applicatable to only 2 OSC options of external clock, ceramic resonator OSC. • The OSC frequency, external clock do not exceed 4330kHz.

Note : The OSC option and predivider option are summarized below. Full care must be exercised.

Table of OSC, predivider Option of LC6543N/46N, 43F/46F and 43L/46L

LC6543N, L6546N

Circuit Configuration	Frequency	Predivider Option (Cycle Time)	VDD Range	Remarks
Ceramic resonator OSC	400kHz	1/1 (10 µs)	3 to 6V	Unusable with 1/3, 1/4 predivider
	800kHz	1/1 (5 µs)	4 to 6V	
		1/3 (15 µs)	4 to 6V	
		1/4 (20 µs)	4 to 6V	
	1MHz	1/1 (4 µs)	4 to 6V	
		1/3 (12 µs)	4 to 6V	
		1/4 (16 µs)	4 to 6V	
	4MHz	1/3 (3 µs)	4 to 6V	Unusable with 1/1 predivider
		1/4 (4 µs)	4 to 6V	
1-pin external clock	200k to 667kHz	1/1 (20 to 6µs)	3 to 6V	
	600k to 2000kHz	1/3 (20 to 6µs)	3 to 6V	
	800k to 2667kHz	1/4 (20 to 6µs)	3 to 6V	
	200k to 1444kHz	1/1 (20 to 2.77µs)	4 to 6V	
	600k to 4330kHz	1/3 (20 to 2.77µs)	4 to 6V	
	800k to 4330kHz	1/4 (20 to 3.70µs)	4 to 6V	
External clock by 2-pin RC OSC circuit	Same as above			
2-pin RC	Used with 1/1predivider,recommended constants. If used with other than recommended constants, the frequency, predivider option, VDD range must be the same as for 1-pin external clock.		3 to 6V 4 to 6V	
External clock input to the ceramic oscillation circuit	The ceramic oscillation circuit cannot be driven by external clock. To drive the circuit with external clock, select the external clock option or the 2-pin RC option.			

LC6543F, L6546F

Circuit Configuration	Frequency	Predivider Option (Cycle Time)	VDD Range	Remarks
Ceramic resonator OSC	4MHz	1/1 (1μs)	4.5 to 6V	
1-pin external clock	200k to 4430kHz	1/1 (20 to 0.92μs)	4.5 to 6V	
External clock input to the ceramic oscillation circuit	The ceramic oscillation circuit cannot be driven by external clock. To drive the circuit with external clock, select the external clock option.			

LC6543L, L6546L

Circuit Configuration	Frequency	Predivider Option (Cycle Time)	VDD Range	Remarks
Ceramic resonator OSC	400kHz	1/1 (10 μs)	2.2 to 6V	Unusable with 1/3, 1/4 predivider
	800kHz	1/1 (5 μs)	2.2 to 6V	
		1/3 (15 μs)	2.2 to 6V	
		1/4 (20 μs)	2.2 to 6V	
	1MHz	1/1 (4 μs)	2.2 to 6V	
		1/3 (12 μs)	2.2 to 6V	
		1/4 (16 μs)	2.2 to 6V	
	4MHz	1/4 (4 μs)	2.2 to 6V	Unusable with 1/1, 1/3 predivider
1-pin external clock	200k to 1040kHz	1/1 (20 to 3.84μs)	2.2 to 6V	
	600k to 3120kHz	1/3 (20 to 3.84μs)	2.2 to 6V	
	800k to 4160kHz	1/4 (20 to 3.84μs)	2.2 to 6V	
External clock by 2-pin RC OSC circuit	Same as above			
2-pin RC	Used with 1/1predivider,recommended constants. If used with other than recommended constants, the frequency, predivider option, VDD range must be the same as for 1-pin external clock.		2.2 to 6V	
External clock input to the ceramic oscillation circuit	The ceramic oscillation circuit cannot be driven by external clock. To drive the circuit with external clock, select the external clock option or the 2-pin RC option.			

Option of ports C, D Output Level at the Reset Mode

For input/output common ports C, D either of the following two output levels may be selected in a group of 4 bits during reset by option.

Option Name	Conditions, etc.
1. Output at the reset mode : "H" level	All of 4 bits of ports C, D
2. Output at the reset mode : "L" level	All of 4 bits of ports C, D

Option of Port Output Configuration

For each input/output common port, either of the following two output configurations may be selected by option .

Option Name	Circuit	Conditions, etc.
1. Open drain output	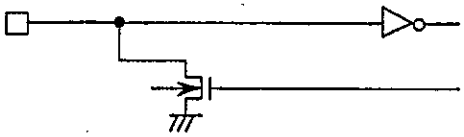	• Unapplicable to port PI0/OSC2 when 2-pin RC OSC or ceramic resonator OSC is selected.
2. Output with pull-up resistor	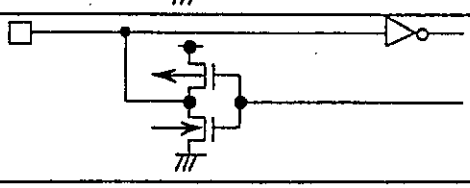	

LC6543N, 6546N

1. Absolute Maximum Ratings at Ta=25°C, VSS=0V

Parameter	Symbol	Conditions	Pins	Limits	unit
Maximum supply voltage	VDD max		VDD	-0.3 to +7.0	V
Output voltage	VO		OSC2	Allowable up to voltage generated	V
Input voltage	VI(1)		OSC1 (*1)	-0.3 to VDD+0.3	V
	VI(2)		TEST, $\overline{RES}$	-0.3 to VDD+0.3	V
Input/output voltage	VIO(1)		Port of OD type	-0.3 to +15	V
	VIO(2)		Port of PU type	-0.3 to VDD+0.3	V
Peak output current	IOP		I/O port	-2 to +20	mA
Average output current	IOA	Per pin over the period of 100 ms	I/O Port	-2 to +20	mA
	ΣIOA(1)	Total current of PC0 to 3, PD0 to 3, PE0 to 3 (*2)	PC0 to 3 PD0 to 3 PE0 to 3	-15 to +100	mA
	ΣIOA(2)	Total current of PF0 to 3, PG0 to 3, PA0 to 3, PI0 (*2)	PF0 to 3 PI0 PG0 to 3 PA0 to 3	-15 to +100	mA
Allowable power dissipation	Pd max(1)	Ta=-40 to +85°C (DIP package)		250	mW
	Pd max(2)	Ta=-40 to +85°C (MFP package)		150	mW
Operating temperature	Topg			-40 to +85	°C
Storage temperature	Tstg			-55 to +125	°C

2. Allowable Operating Conditions at Ta=-40 to +85°C, VSS=0V, VDD=3.0 to 6.0V

Parameter	Symbol	Conditions	VDD [V]	Pins	Limits min.	typ.	max.	unit
Operating supply voltage	VDD			VDD	3.0		6.0	V
Standby supply voltage	VST	RAM, register hold (*3)		VDD	1.8		6.0	V
"H"-level input voltage	VIH(1)	Output Nch Tr. OFF		Port of OD type (except I0)	0.7VDD		+13.5	V
	VIH(2)	Output Nch Tr. OFF		Port of PU type (except I0)	0.7VDD		VDD	V
	VIH(3)	Output Nch Tr. OFF		$\overline{INT}$, $\overline{SCK}$, SI, I0 of OD type	0.8VDD		+13.5	V
	VIH(4)	Output Nch Tr. OFF		$\overline{INT}$, $\overline{SCK}$, SI, I0 of PU type	0.8VDD		VDD	V
	VIH(5)			$\overline{RES}$	0.8VDD		VDD	V
	VIH(6)	External clock mode		OSC1	0.8VDD		VDD	V
"L"-level input voltage	VIL(1)	Output Nch Tr. OFF	VDD=4 to 6	Port	VSS		0.3VDD	V
	VIL(2)	Output Nch Tr.OFF	3 to 6	Port	VSS		0.25VDD	V
	VIL(3)	Output Nch Tr. OFF	VDD=4 to 6	$\overline{INT}$, $\overline{SCK}$, SI	VSS		0.25VDD	V

Parameter	Symbol	Conditions	VDD [V]	Pins	Limits min.	typ.	max.	unit
"L"-level input voltage	VIL(4)	Output Nch Tr.OFF	3 to 6	$\overline{INT}$, $\overline{SCK}$, SI	VSS		0.2VDD	V
	VIL(5)	External clock mode	VDD=4 to 6	OSC1	VSS		0.25VDD	V
	VIL(6)	External clock mode	3 to 6	OSC1	VSS		0.2VDD	V
	VIL(7)		VDD=4 to 6	TEST	VSS		0.3VDD	V
	VIL(8)		3 to 6	TEST	VSS		0.25VDD	V
	VIL(9)		VDD=4 to 6	$\overline{RES}$	VSS		0.25VDD	V
	VIL(10)		3 to 6	$\overline{RES}$	VSS		0.2VDD	V
Operating frequency (cycle time)	fop (Tcyc)	When the 1/3 or 1/4 predivider option is selected, clock must not exceed 4.33MHz.	VDD=4 to 6		200 (20)		1444 (2.77)	kHz (μs)
			VDD=3 to 6		200 (20)		667 (6.0)	kHz (μs)
External clock conditions		Fig.1.						
Frequency	text	When clock exceeds 1.444 MHz, the 1/3 or 1/4 predivider option is selected.	VDD=4 to 6	OSC1	200		4330	kHz
			3 to 6		200		2667	kHz
Pulse width	textH, textL		VDD=4 to 6	OSC1	69			ns
			3 to 6		180			ns
Rise/Fall time	textR, textF		VDD=4 to 6	OSC1			50	ns
			3 to 6				100	ns
Oscillation guaranty constants								
2-pin RC oscillation	Cext	Fig.2	VDD=3 to 6	OSC1, OSC2		220±5%		pF
	Cext	Fig.2	VDD=4 to 6	OSC1, OSC2		220±5%		pF
	Rext	Fig.2	VDD=3 to 6	OSC1, OSC2		12±1%		kΩ
	Rext	Fig.2	VDD=4 to 6	OSC1, OSC2		4.7±1%		kΩ
Ceramic		Fig.3				Table 1		

3. Electrical Characteristics at Ta=-40 to +85°C, VSS=0V, VDD=3.0V to 6.0V

Parameter	Symbol	Conditions	Pins	Limits min.	typ.	max.	unit
"H"-level input current	IIH(1)	Output Nch Tr. OFF (including OFF leak current of Nch Tr.) VIN=+13.5V	Port of OD type			+5.0	μA
	IIH(2)	External clock mode, VIN=VDD	OSC1			+1.0	μA
"L"-level input current	IIL(1)	Output Nch Tr. OFF VIN=VSS	Port of OD type	-1.0			μA
	IIL(2)	Output Nch Tr. OFF VIN=VSS	Port of PU type	-1.3	-0.35		mA
	IIL(3)	VIN=VSS	$\overline{RES}$	-45	-10		μA
	IIL(4)	External clock mode, VIN=VSS	OSC1	-1.0			μA
"H"-level output voltage	VOH(1)	IOH=-50μA VDD=4.0 to 6.0V	Port of PU type	VDD-1.2			V
	VOH(2)	IOH=-10μA	Port of PU type	VDD-0.5			V

Parameter	Symbol	Conditions	Pins	Limits			
				min.	typ.	max.	unit
"L"-level output voltage	VOL(1)	IOL=10mA,VDD=4.0 to 6.0V	Port			1.5	V
	VOL(2)	IOL=1mA, IOL of each port: 1mA or less	Port			0.5	V
Hysteresis voltage	VHIS		$\overline{RES}$,$\overline{INT}$,$\overline{SCK}$, SI, OSC1 of schmitt type(*4)		0.1VDD		V
Current dissipation 2-pin RC oscillation	IDDOP(1)	Output Nch Tr. OFF at operating, Port=VDD Fig.2 fosc=850kHz (TYP) VDD=4 to 6V	VDD		1.5	4	mA
	IDDOP(2)	Fig.2 fosc=400kHz (TYP)	VDD		1.0	4	mA
Ceramic resonator oscillation	IDDOP(3)	Fig.3 4MHz, 1/3 predivider VDD=4 to 6V	VDD		2.0	5	mA
	IDDOP(4)	Fig.3 4MHz, 1/4 predivider VDD=4 to 6V	VDD		2.0	4	mA
	IDDOP(5)	Fig.3 400kHz	VDD		1.0	2.5	mA
	IDDOP(6)	Fig.3 800kHz VDD=4 to 6V	VDD		1.5	4	mA
External clock	IDDOP(7)	200kHz to 667kHz, 1/1 predivider 600kHz to 2000kHz, 1/3 predivider 800kHz to 2667kHz, 1/4 predivider	VDD		1.5	4	mA
	IDDOP(8)	200kHz to 1444kHz, 1/1 predivider 600kHz to 4330kHz, 1/3 predivider 800kHz to 4330kHz, 1/4 predivider, VDD=4 to 6V	VDD		2.0	5	mA
Standby mode	IDDst	Output Nch Tr.OFF VDD=6V Port=VDD VDD=3V	VDD VDD		0.05 0.025	10 5	μA μA
Oscillation characteristics Ceramic OSC Frequency	fCFOSC (*5)	Fig.3 fo=400kHz	OSC1, OSC2	384	400	416	kHz
		Fig.3 fo=800kHz,VDD=4 to 6V	OSC1, OSC2	768	800	832	kHz
		Fig.3 fo=1MHz VDD=4 to 6V	OSC1, OSC2	960	1000	1040	kHz
		Fig.3 fo=4MHz,1/3 predivider 1/4 predivider VDD=4 to 6V	OSC1, OSC2	3840	4000	4160	kHz
Stable time	tCFS	Fig.4 fo=400kHz				10	ms
		Fig.4 fo=800kHz,1MHz,4MHz, 1/3 predivider, 1/4 predivider VDD=4 to 6V				10	ms
2-pin RC oscillation Frequency	fMOSC	Fig.2 Cext=220pF±5% Fig.2 Rext=4.7kΩ±1% VDD=4 to 6V	OSC1, OSC2	619	850	1144	kHz
		Fig.2 Cext=220pF±5% Fig.2 Rext=12kΩ±1% VDD=3 to 6V	OSC1, OSC2	305	400	546	kHz

Parameter	Symbol	Conditions	Pins	Limits			
				min.	typ.	max.	unit
Pull-up resistance I/O port pull-up resistance	RPP	VDD=5V	Port of PU type		14		kΩ
External reset characteristics Reset time	tRST				See Fig.5.		
Pin capacitance	Cp	f=1MHz Other than pins to be tested, VIN=VSS			10		pF
Serial Clock Input clock cycle time	tCKCY(1)	Fig.6 VDD=4 to 6	$\overline{SCK}$ $\overline{SCK}$	3.0 12.0			µs µs
Output clock cycle time	tCKCY(2)	Fig.6	$\overline{SCK}$		64 x TCYC (*6)		µs
Input clock "L" level pulse width	tCKL(1)	Fig.6 VDD=4 to 6	$\overline{SCK}$ $\overline{SCK}$	1.0 4.0			µs µs
Onput clock "L" level pulse width	tCKL(2)	Fig.6	$\overline{SCK}$		32 x TCYC		µs
Input clock "H" level pulse width	tCKH(1)	Fig.6 VDD=4 to 6	$\overline{SCK}$ $\overline{SCK}$	1.0 4.0			µs µs
Onput clock "H" level pulse width	tCKH(2)	Fig.6	$\overline{SCK}$		32 x TCYC		µs
Serial input Data setup time	tICK	Specified for ↑ of $\overline{SCK}$	SI	0.5			µs
Data hold time	tCKI	Fig.6	SI	0.5			µs
Serial output Output delay time	tCKO	Specified for VDD=4 to 6 ↓ of $\overline{SCK}$ Nch OD only, External 1kΩ, External 50pF, Fig.6	SO SO			0.5 2.0	µs µs
Pulse output Period	tPCY	Fig.7	PE0		64 x TCYC		µs
"H"-level pulse width	tPH	TCYC=4 x System clock Period, Nch OD only,	PE0		32 x TCYC ±10%		µs
"L"-level pulse width	tPL	External 1kΩ, External 50pF	PE0		32 x TCYC ±10%		µs

(*1) When oscillated internally under the oscillating conditions in Fig.4, up to the oscillation amplitude generated is allowable.

(*2) Average over the period of 100ms.

(*3) Operating supply voltage VDD must be held until the standby mode is entered after the execution of the HALT instruction. The PA3 (or PA0 to 3) pin must be free from chattering during the HALT instruction execution cycle.

(*4) The OSC1 pin can be schmitt-triggered when the 2-pin RC oscillation option or external clock oscillation option has been selected.

(*5) fCFOSC: oscillation frequency. There is a tolerance of approximately 1% between the center frequency at the ceramic resonator mode and the nominal value presented by the ceramic resonator supplier. For details, refer to the specification for the ceramic resonator.

(*6) TCYC=4 x system clock period

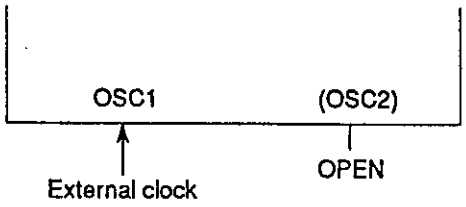

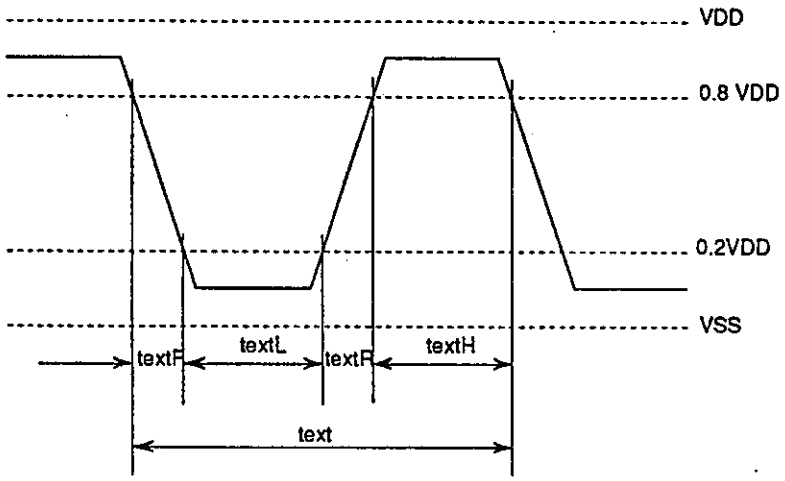

Fig. 1 External Clock Input Waveform

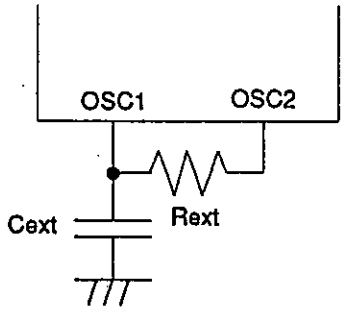

Fig. 2 2-pin RC Oscillation Circuit

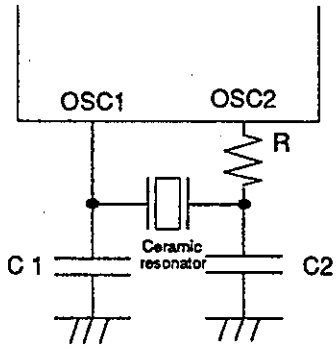

Fig. 3 Ceramic Resonator Oscillation Circuit

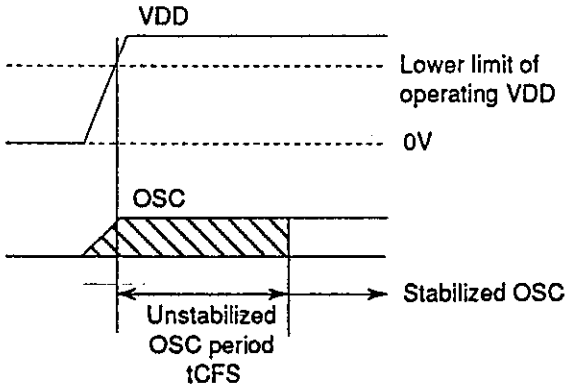

Fig. 4 Oscillation Stabilizing Period

Table 1 Constants Guaranteed for Ceramic Resonator OSC

4MHz (Murata)	C1	33pF±10%
CSA4.00MG	C2	33pF±10%
CST4.00MGW (built-in C)	R	0Ω
4MHz (Kyocera)	C1	33pF±10%
KBR4.0MSA	C2	33pF±10%
KBR4.0MKS (built-in C)	R	0Ω
1MHz (Murata)	C1	100pF±10%
CSB1000J	C2	100pF±10%
	R	2.2kΩ
1MHz (Kyocera)	C1	100pF±10%
KBR1000F	C2	100pF±10%
	R	0Ω
800kHz (Murata)	C1	100pF±10%
CSB800J	C2	100pF±10%
	R	2.2kΩ
800kHz (Kyocera)	C1	100pF±10%
KBR800F	C2	100pF±10%
	R	0Ω
400kHz (Murata)	C1	220pF±10%
CSB400P	C2	220pF±10%
	R	2.2kΩ
400kHz (Kyocera)	C1	330pF±10%
KBR400BK	C2	330pF±10%
	R	0Ω

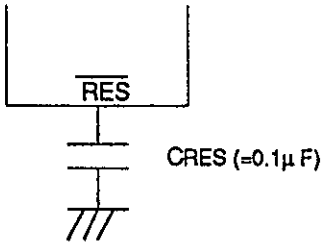

Fig. 5 Reset Circuit

(Note) When the rise time of the power supply is 0, the reset time becomes 10ms to 100ms at CRES=0.1μF. If the rise time of the power supply is long, the value of CRES must be increased so that the reset time becomes 10ms or more.

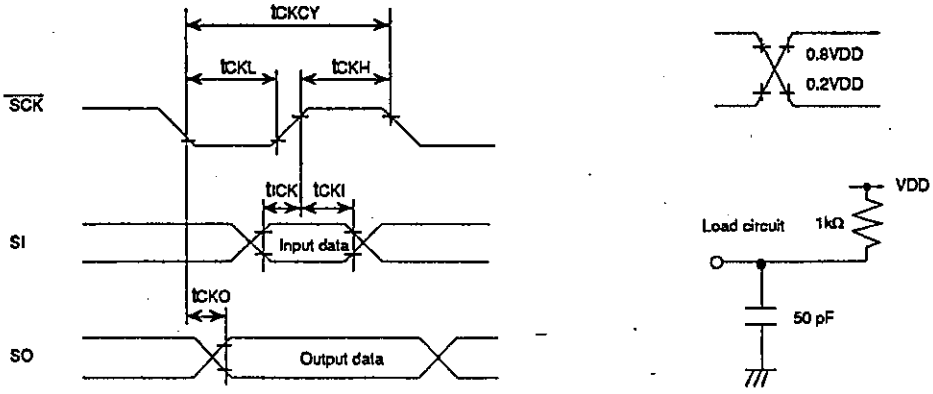

Fig. 6 Serial Input/Output Timing

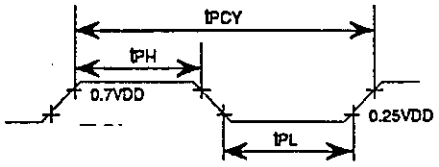

The load conditions are the same as in Fig. 6.

Fig. 7 Pulse Output Timing at Port PE0

RC Oscillation Characteristics of the LC6543N, LC6546N

Fig. 8 shows the RC oscillation characteristic of the LC6543N, 6546N. For the variation range of RC OSC frequency of the LC6543N, LC6546N, the following are guaranteed at the external constants only shown below.

1) VDD=3.0V to 6.0V, Ta=-40°C to +85°C
   External constants Cext = 220 pF
   Rext = 12 kΩ
   305 kHz ≤ fMOSC ≤ 546 kHz
2) VDD=4.0V to 6.0V, Ta=-40°C to +85°C
   Cext = 220 pF
   Rext = 4.7 kΩ
   619kHz ≤ fMOSC ≤ 1144kHz

- If any other constants than specified above are used, the range of Rext=3kΩ to 20kΩ, Cext=150pF to 390pF must be observed. (See Fig.8.)

(*7) : The oscillation frequency at VDD=5.0V, Ta=+25°C must be in the range of 350kHz to 750kHz.
(*8) : The oscillation frequency at VDD=4.0 to 6.0V, Ta=-40°C to +85°C and VDD=3.0V to 6.0V, Ta=-40°C to 85°C must be within the operation clock frequency range.

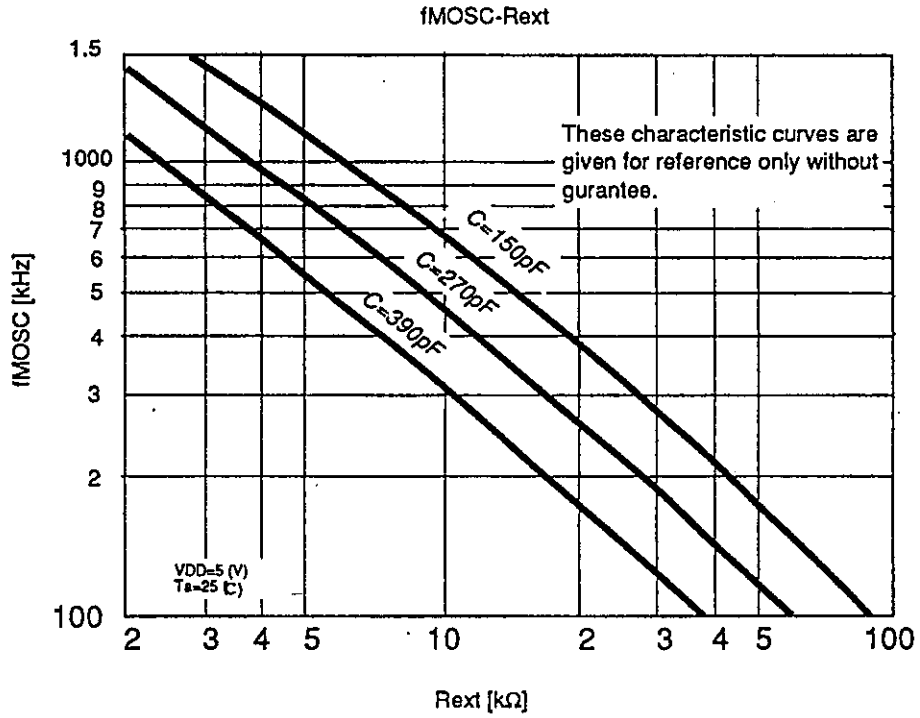

Fig. 8 RC Oscillation Frequency Data (Typ.)

LC6543F, LC6546F

1. Absolute Maximum Ratings at Ta=25°C, VSS=0V

Parameter	Symbol	Conditions	Pin	Limits	unit
Maximum supply voltage	VDD max		VDD	-0.3 to +7.0	V
Output voltage	VO		OSC2	Allowable up to voltage generated	V
Input voltage	VI(1)		OSC1 (*1)	-0.3 to VDD+0.3	V
	VI(2)		TEST, $\overline{RES}$	-0.3 to VDD+0.3	V
Input/output voltage	VIO(1)		Port of OD type	-0.3 to +15	V
	VIO(2)		Port of PU type	-0.3 to VDD+0.3	V
Peak output current	IOP		I/O Port	-2 to +20	mA
Average output current	IOA	Per pin over the period of 100ms	I/O Port	-2 to +20	mA
	ΣIOA(1)	Total current of PC0 to 3, PD0 to 3, PE0 to 3 (*2)	PC0 to 3 PD0 to 3 PE0 to 3	-15 to +100	mA
	ΣIOA(2)	Total current of PF0 to 3, PG0 to 3, PA0 to 3, PI0 (*2)	CF0 to 3 PI0 PG0 to 3 PA0 to 3	-15 to +100	mA
Allowable power dissipation	Pd max(1)	Ta=-40 to +85°C (DIP package)		250	mW
	Pd max(2)	Ta=-40 to +85°C (MFP package)		150	mW
Operating temperature	Topg			-40 to +85	°C
Storage temperature	Tstg			-55 to +125	°C

2. Allowable Operating Conditions at Ta=-40 to +85°C, VSS=0V, VDD=4.5 to 6.0V

Parameter	Symbol	Conditions	Pin	Limits			
				min.	typ.	max.	unit
Operating supply voltage	VDD		VDD	4.5		6.0	V
Standby supply voltage	VST	RAM, register hold (*3)	VDD	1.8		6.0	V
"H"-level input voltage	VIH(1)	Output Nch Tr. OFF	Port of OD type (except I0)	0.7VDD		+13.5	V
	VIH(2)	Output Nch Tr. OFF	Port of PU type (except I0)	0.7VDD		VDD	V
	VIH(3)	Output Nch Tr. OFF	$\overline{INT}$, $\overline{SCK}$, SI, I0 of OD type	0.8VDD		+13.5	V
	VIH(4)	Output Nch Tr. OFF	$\overline{INT}$, $\overline{SCK}$, SI, I0 of PU type	0.8VDD		VDD	V
	VIH(5)		$\overline{RES}$	0.8VDD		VDD	V
	VIH(6)	External clock mode	OSC1	0.8VDD		VDD	V

Parameter	Symbol	Conditions	Pin	Limits			
				min.	typ.	max.	unit
"L"-level input voltage	VIL(1)	Output Nch Tr. OFF	Port	VSS		0.3VDD	V
	VIL(2)	Output Nch Tr. OFF	$\overline{INT}$, $\overline{SCK}$, SI	VSS		0.25VDD	V
	VIL(3)	External clock mode	OSC1	VSS		0.25VDD	V
	VIL(4)		TEST	VSS		0.2VDD	V
	VIL(5)		$\overline{RES}$	VSS		0.25VDD	V
Operating frequency (Cycle time)	fOP (Tcyc)			200 (20)		4330 (0.92)	kHz (μs)
External clock conditions							
Frequency	text	Fig. 1	OSC1	200		4330	kHz
Pulse width	textH, textL	Fig. 1	OSC1	69			ns
Rise/fall time	textR, textF	Fig. 1	OSC1			50	ns
Oscillation guaranteed constants ceramic resonator OSC		Fig. 2		See Table 1.			

3. Electrical Characteristics at Ta=-40 to +85°C, VSS=0V, VDD=4.5 to 6.0V

Parameter	Symbol	Conditions	Pin	Limits			
				min.	typ.	max.	unit
"H"-level input current	IIH(1)	Output Nch Tr. OFF (including OFF leak current of Nch Tr.) VIN=+13.5V	Port of OD type			+5.0	μA
	IIH(2)	External clock mode, VIN=VDD	OSC1			+1.0	μA
"L"-level input current	IIL(1)	Output Nch Tr. OFF VIN=VSS	Port of OD type	-1.0			μA
	IIL(2)	Output Nch Tr. OFF VIN=VSS	Port of PU type	-1.3	-0.35		mA
	IIL(3)	VIN=VSS	$\overline{RES}$	-45	-10		μA
	IIL(4)	External clock mode, VIN=VSS	OSC1	-1.0			μA
"H"-level output voltage	VOH(1)	IOH=-50μA	Port of PU type	VDD-1.2			V
	VOH(2)	IOH=-10μA	Port of PU type	VDD-0.5			V
"L"-level output voltage	VOL(1)	IOL=10mA	Port			1.5	V
	VOL(2)	IOL=1mA, IOL of each port : 1mA or less	Port			0.5	V
Hysteresis voltage	VHIS		$\overline{RES}$,$\overline{INT}$,$\overline{SCK}$,SI OSC1 of schmitt type (*4)		0.1VDD		V

Parameter	Symbol	Conditions	Pin	Limits			
				min.	typ.	max.	unit
Current dissipation Ceramic resonator OSC	IDDOP(1)	Fig. 2 4MHz *1	VDD		2.5	6	mA
External clock	IDDOP(2)	200kHz to 4330kHz *1	VDD		2.5	6	mA
		*1 Output Nch Tr. OFF at Operating mode Port=VDD					
Standby mode	IDDst	Output Nch Tr. OFF VDD=6V	VDD		0.05	10	μA
		Port=VDD VDD=3V	VDD		0.025	5	μA
Oscillation characteristics Ceramic resonator OSC Frequency	fCFOSC	Fig.2 fo=4MHz (*5)	OSC1, OSC2	3840	4000	4160	kHz
Stable time	tCFS	Fig.3 fo=4MHz				10	ms
Pull-up resistance I/O port pull-up resistance	RPP	VDD=5V	Port of PU type		14		kΩ
External reset characteristics Reset time	tRST				See Fig. 4.		
Pin capacitance	Cp	f=1MHz, other than pins to be tested, VIN=VSS			10		pF
Serial clock Input clock Cycle time	tCKCY(1)	Fig. 5	$\overline{SCK}$	3.0			μs
Output clock Cycle time	tCKCY(2)	Fig. 5	$\overline{SCK}$		64 x TCYC (*6)		μs
Input clock "L"-level pulse width	tCKL(1)	Fig. 5	$\overline{SCK}$	1.0			μs
Output clock "L"-level pulse width	tCKL(2)	Fig. 5	$\overline{SCK}$		32 x TCYC		μs
Input clock "H"-level pulse width	tCKH(1)	Fig. 5	$\overline{SCK}$	1.0			μs
Output clock "H"-level pulse width	tCKH(2)	Fig. 5	$\overline{SCK}$		32 x TCYC		μs
Serial input Data setup time	tICK	Specified for ↑ of $\overline{SCK}$	SI	0.5			μs
Data hold time	tCKI	Fig. 5	SI	0.5			μs

Parameter	Symbol	Conditions	Pin	Limits			
				min.	typ.	max.	unit
Serial output Output delay time	tCKO	Specified for ↓ of $\overline{SCK}$ Nch OD only, External 1kΩ External 50pF, Fig. 5	SO			0.5	μs
Pulse output Period	tPCY	Fig. 6	PE0		64 x TCYC		μs
"H"-level Pulse width	tPH	TCYC=4 x System clock Period	PE0		32 x TCYC ±10%		μs
"L"-level Pulse width	tPL	Nch OD only, External 1kΩ External 50pF	PE0		32 x TCYC ±10%		μs

(*1) When oscillated internally under the oscillating conditions in Fig.2, up to the oscillation amplitude generated is allowable.

(*2) Average over the period of 100ms.

(*3) Operating supply voltage VDD must be held until the standby mode is entered after the execution of the HALT instruction. The PA3 (or PA0 to 3) pin must be free from chattering during the HALT instruction execution cycle.

(*4) The OSC1 pin can be schmitt-triggered when the external clock oscillation option has been selected.

(*5) fCFOSC : Oscillatable frequency.

(*6) TCYC=4 x System clock period

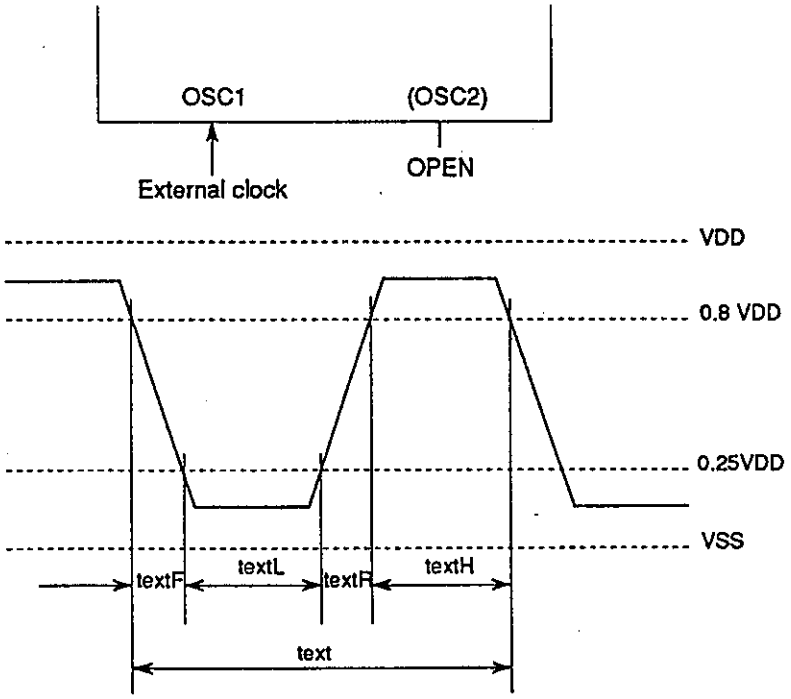

Fig. 1 External Clock Input Waveform

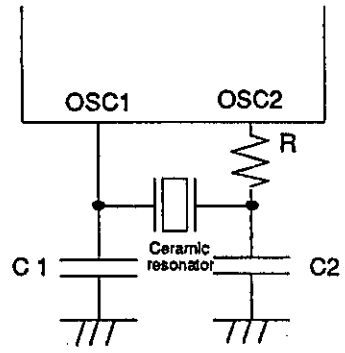

Fig. 2 Ceramic resonator OSC circuit

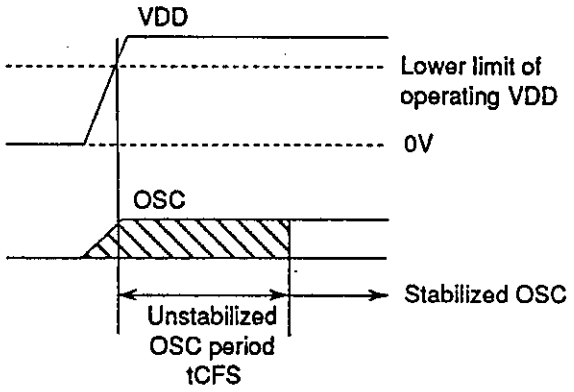

Fig. 3 OSC Stabilizing Period

Table 1. Constants Guaranteed for Ceramic Resonator OSC

4MHz (Murata)	C1	33pF ± 10%
CSA4.00MG	C2	33pF ± 10%
CST4.00MGW (built-in C)	R	0Ω
4MHz (Kyocera)	C1	33pF ± 10%
KBR4.0MSA	C2	33pF ± 10%
KBR4.0MKS (built-in C)	R	0Ω

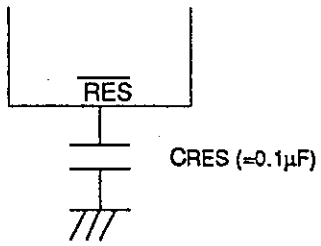

Fig. 4 Reset Circuit

(Note) When the rise time of the power supply is 0, the reset time becomes 10ms to 100ms at CRES=0.1μF. If the rise time of the power supply is long, the value of CRES must be increased so that the reset time becomes 10ms or more.

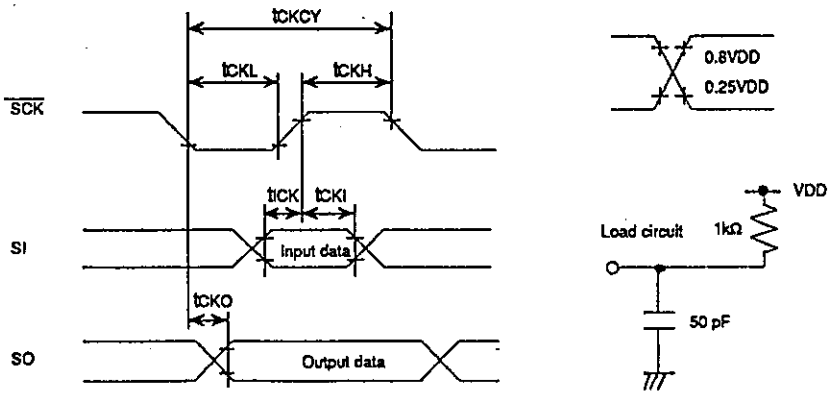

Fig. 5 Serial Inut/Output Timing

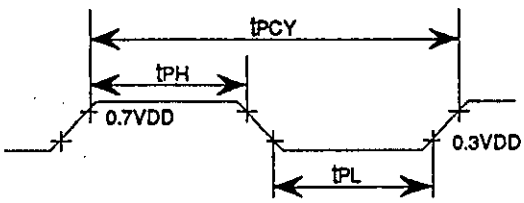

The load conditions are the same as in Fig. 5.

Fig. 6 Pulse Output Timing at Port PE0

LC6543L, LC6546L

1. Absolute Maximum Ratings at Ta=25°C, VSS=0V

Parameter	Symbol	Conditions	Pin	Limits	unit
Maximum supply voltage	VDD max		VDD	-0.3 to 7.0	V
Output voltage	VO		OSC2	Allowable up to voltage generated	V
Input voltage	VI(1)		OSC1 (*1)	-0.3 to VDD+0.3	V
	VI(2)		TEST, $\overline{RES}$	-0.3 to VDD+0.3	V
Input/output voltage	VIO(1)		Port of OD type	-0.3 to +15	V
	VIO(2)		Port of PU type	-0.3 to VDD+0.3	V
Peak output current	IOP		I/O Port	-2 to +20	mA
Average output current	IOA	Per pin over the period of 100ms	I/O Port	-2 to +20	mA
	ΣIOA(1)	Total curren of PC0 to 3, PD0 to 3,PE0 to 3 (*2)	PC0 to 3 PD0 to 3 PE0 to 3	-15 to +100	mA
	ΣIOA(2)	Total curren of PF0 to 3, PG0 to 3 ,PA0 to 3, PI0 (*2)	CF0 to 3 PI0 PG0 to 3 PA0 to 3	-15 to +100	mA
Allowable power dissipation	Pd max(1)	Ta=-40 to +85°C (DIP package)		250	mW
	Pd max(2)	Ta=-40 to +85°C (MFP package)		150	mW
Operating temperature	Topg			-40 to +85	°C
Storage temperature	Tstg			-55 to +125	°C

2. Allowable Operating Conditions at Ta=-40°C to 85°C, VSS=0V, VDD=2.2 to 6.0V

Parameter	Symbol	Conditions	Pin	Limits			
				min.	typ.	max.	unit
Operating supply voltage	VDD		VDD	2.2		6.0	V
Standby supply voltage	VST	RAM, register hold (*3)	VDD	1.8		6.0	V
"H"-level input voltage	VIH(1)	Output Nch Tr. OFF	Port of OD type (except I0)	0.7VDD		+13.5	V
	VIH(2)	Output Nch Tr. OFF	Port of PU type (except I0)	0.7VDD	_	VDD	V
	VIH(3)	Output Nch Tr. OFF	$\overline{INT}$, $\overline{SCK}$, SI, I0 of OD type	0.8VDD		+13.5	V
	VIH(4)	Output Nch Tr. OFF	$\overline{INT}$, $\overline{SCK}$, SI, I0 of PU type	0.8VDD		VDD	V
	VIH(5)		$\overline{RES}$	0.8VDD		VDD	V
	VIH(6)	External clock	OSC1	0.8VDD		VDD	V

Parameter	Symbol	Conditions	Pin	Limits			
				min.	typ.	max.	unit
"L"-level input voltage	VIL(1)	Output Nch Tr. OFF	Port	VSS		0.2VDD	V
	VIL(2)	Output Nch Tr. OFF	$\overline{INT}$, $\overline{SCK}$, SI	VSS		0.2VDD	V
	VIL(3)	External clock	OSC1	VSS		0.15VDD	V
	VIL(4)		$\overline{TEST}$	VSS		0.2VDD	V
	VIL(5)		$\overline{RES}$	VSS		0.2VDD	V
Operating frequency (cycle time)	fOP (Tcyc)	When the 1/4 predivider option is selected, clock must not exceed 4.16MHz.		200 (20)		1040 (3.84)	kHz (μs)
External Clock conditions							
Frequency	text	Fig.1 When clock exceeds 1.040MHz, the 1/3 or 1/4 predivider option is selected.	OSC1	200		4160	kHz
Pulse width	textH, textL		OSC1	100			ns
Rise/fall time	textR, textF		OSC1			100	ns
Oscillation guaranteed constants							
2-pin RC oscillation	Cext	Fig.2	OSC1, OSC2	220 ± 5%			pF
	Rext			12 ± 1%			kΩ
Ceramic oscillation		Fig.3		See Table 1.			

3. Electrical Characteristics at Ta=-40 to +85°C, VSS=0V, VDD=2.2 to 6.0V

Parameter	Symbol	Conditions	Pin	Limits			
				min.	typ.	max.	unit
"H"-level input current	IIH(1)	Output Nch Tr. OFF (including OFF leak current of Nch Tr.) VIN=+13.5V	Port of OD type			+5.0	μA
	IIH(2)	External clock mode, VIN=VDD	OSC1			+1.0	μA
"L"-level input current	IIL(1)	Output Nch Tr. OFF VIN=VSS	Port of OD type	-1.0			μA
	IIL(2)	Output Nch Tr. OFF VIN=VSS	Port of PU type	-1.3	-0.35		mA
	IIL(3)	VIN=VSS	$\overline{RES}$	-45	-10		μA
	IIL(4)	External clock mode, VIN=VSS	OSC1	-1.0			μA
"H"-level output voltage	VOH	IOH=-10μA	Port of PU type	VDD-0.5			V
"L"-level output voltage	VOL(1)	IOL=3mA	Port			1.5	V
	VOL(2)	IOL=1mA, IOL of each port: 1mA or less	Port			0.4	V
Hysteresis voltage	VHIS		$\overline{RES}$,$\overline{INT}$,$\overline{SCK}$,SI OSC1 of Schmitt type (*4)		0.1VDD		V

Parameter	Symbol	Conditions	Pin	Limits			
				min.	typ.	max.	unit
Current dissipation		Output Nch Tr. OFF at operating, Port=VDD					
2-pin RC OSC	IDDOP(1)	Fig.2 fOSC=400kHz (TYP)	VDD		1.0	4	mA
Ceramic OSC	IDDOP(2)	Fig.3 4MHz, 1/4predivider	VDD		2.0	4	mA
	IDDOP(3)	Fig.3 4MHz, 1/4predivider VDD=2.2V	VDD		0.5	1	mA
	IDDOP(4)	Fig.3 400kHz	VDD		1.0	2.5	mA
	IDDOP(5)	Fig.3 800kHz	VDD		1.5	4.0	mA
External clock	IDDOP(6)	200kHz to 1024kHz, 1/1 predivider 600kHz to 3120kHz, 1/3 predivider 800kHz to 4160kHz, 1/4 predivider	VDD		2.5	4	mA
Standby mode	IDDst	Output Nch Tr. OFF VDD=6V	VDD		0.05	10	μA
		Port=VDD VDD=2.2V	VDD		0.025	5	μA
Oscillation characteristics Ceramic OSC Frequency	fCFOSC (*5)	Fig.3 fo=400kHz	OSC1, OSC2	384	400	416	kHz
		Fig.3 fo=800kHz	OSC1, OSC2	768	800	832	kHz
		Fig.3 fo=1MHz	OSC1, OSC2	960	1000	1040	kHz
		Fig.3 fo=4MHz, 1/4 predivider	OSC1, OSC2	3840	4000	4160	kHz
Stable time	tCFS	Fig.4 fo=400kHz				10	ms
		Fig.4 fo=800kHz, 1MHz, 4MHz, 1/4 predivider				10	ms
2-pin RC OSC Frequency	fMOSC	Fig.2 Cext=220pF±5% Fig.2 Rext=12kΩ±1%	OSC1, OSC2	284	400	546	kHz
Pull-up resistance I/O port pull-up resistance	RPP	VDD=5V	Port of PU type		14		kΩ
External reset characteristics Reset time	tRST			See Fig. 5.			
Pin capacitance	Cp	f=1MHz, Other than pins to be tested, VIN=VSS			10		pF

Parameter	Symbol	Conditions	Pin	Limits			
				min.	typ.	max.	unit
Serial clock Input clock Cycle time	tCKCY(1)	Fig.6	$\overline{SCK}$	12.0			µs
Output clock Cycle time	tCKCY(2)	Fig.6	$\overline{SCK}$		64 x TCYC (*6)		µs
Input clock "L"-level pulse width	tCKL(1)	Fig.6	$\overline{SCK}$	4.0			µs
Output clock "L"-level pulse width	tCKL(2)	Fig.6	$\overline{SCK}$		32 x TCYC		µs
Input clock "H"-level pulse width	tCKH(1)	Fig.6	$\overline{SCK}$	4.0			µs
Output clock "H"-level pulse width	tCKH(2)	Fig.6	$\overline{SCK}$		32 x TCYC		µs
Serial Input Data setup time	tICK	Specified for ↑ of $\overline{SCK}$	SI	0.5			µs
Data hold time	tCKI	Fig.6	SI	0.5			µs
Serial Output Output delay time	tCKO	Specified for ↓ of $\overline{SCK}$ Nch OD only, External 1kΩ Fig.6 External 50pF	SO			2.0	µs
Pulse output Period	tPCY	Fig.7	PE0		64 x TCYC		µs
"H"-level pulse width	tPH	TCYC=4 x System clock Period	PE0		32 x TCYC ±10%		µs
"L"-level pulse width	tPL	Nch OD only, External 1kΩ External 50pF	PE0		32 x TCYC ±10%		µs

(*1) When oscillated internally under the oscillating conditions in Fig.3, up to the oscillation amplitude generated is allowable.

(*2) Average over the period of 100ms.

(*3) Operating supply voltage VDD must be held until the standby mode is entered after the execution of the HALT instruction.
The PA3 (or PA0 to 3) pin must be free from chattering during the HALT instruction execution cycle.

(*4) The OSC1 pin can be schmitt-triggered when the 2-pin RC oscillation option, or external clock oscillation option has been selected.

(*5) fCFOSC : Oscillatable frequency.

(*6) TCYC=4 x System clock period

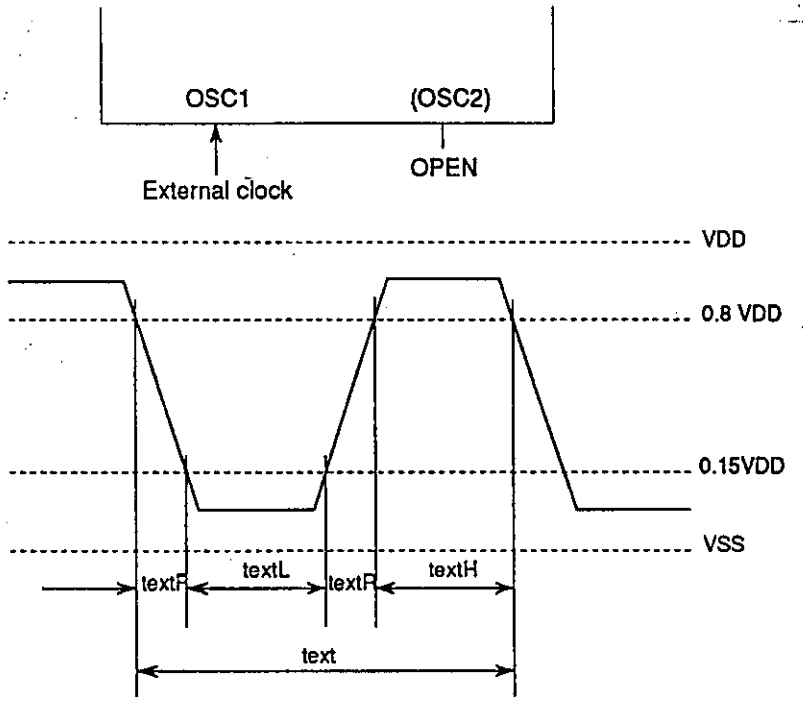

Fig. 1 External Clock Input Waveform

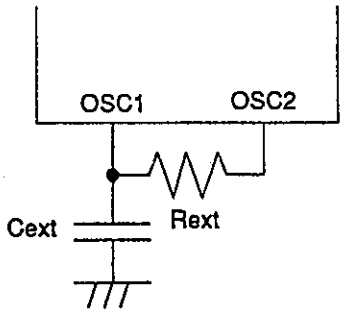

Fig. 2 2-pin RC Oscillation Circuit

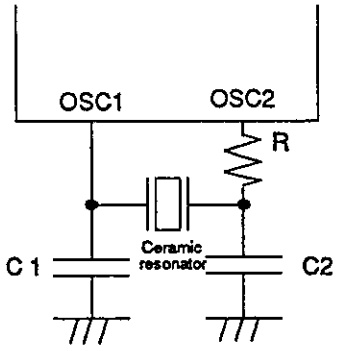

Fig. 3 Ceramic Resonator Oscillation Circuit

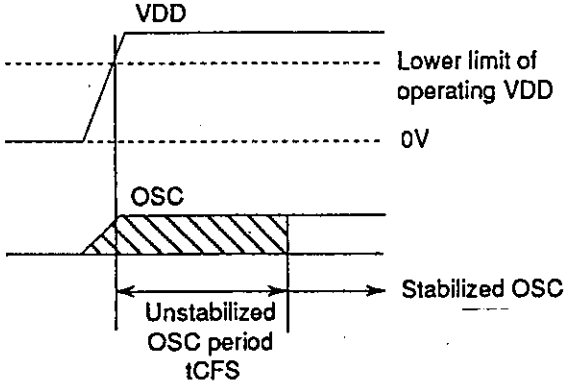

Fig. 4 Oscillation Stabilizing Period

Table 1 Constants Guaranteed for Ceramic Resonator OSC

4MHz (Murata)	C1	33pF±10%
CSA4.00MGU	C2	33pF±10%
CST4.00MGWU (built-in C)	R	0Ω
1MHz (Murata)	C1	100pF±10%
CSB1000J	C2	100pF±10%
	R	2.2kΩ
1MHz (Kyocera)	C1	100pF±10%
KBR1000F	C2	100pF±10%
	R	0Ω
800kHz (Murata)	C1	100pF±10%
CSB800J	C2	100pF±10%
	R	2.2kΩ
800kHz (Kyocera)	C1	100pF±10%
KBR800F	C2	100pF±10%
	R	0Ω
400kHz (Murata)	C1	220pF±10%
CSB400P	C2	220pF±10%
	R	2.2kΩ
400kHz (Kyocera)	C1	330pF±10%
KBR400BK	C2	330pF±10%
	R	0Ω

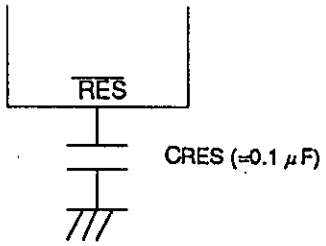

Fig. 5 Reset Circuit

(Note) When the rise time of the power supply is 0, the reset time becomes 10ms to 100ms at CRES=0.1μF. If the rise time of the power supply is long, the value of CRES must be increased so that the reset time becomes 10ms or more.

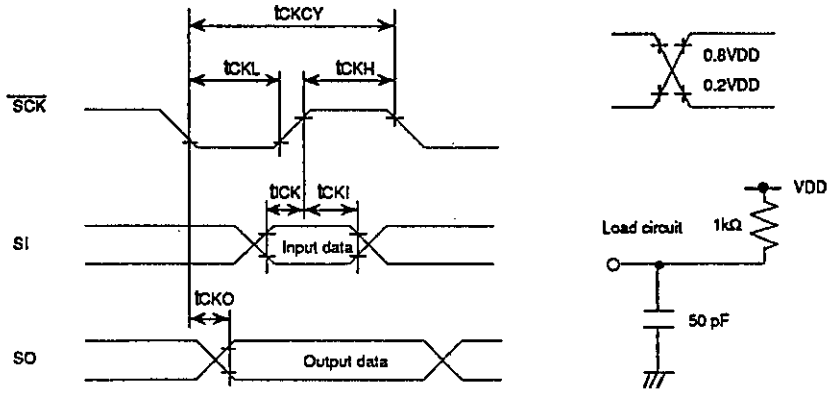

Fig. 6 Serial Input/Output Timing

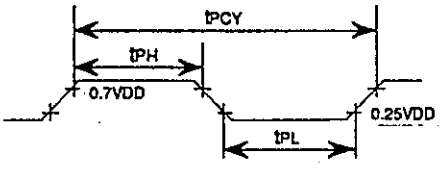

The load conditions are the same as in Fig. 6.

Fig.7 Pulse Output Timing at Port PE0

RC Oscillation Characteristic of the LC6543L, 6546L

Fig. 8 shows the RC oscillation characteristic of the LC6543L, 6546L. For the variation range of RC OSC frequency of the LC6543L, 6546L, the following are guaranteed at the external constants only shown below.

VDD=2.2V to 6.0V, Ta=-40°C to +85°C

External constants Cext = 220 pF

Rext = 12 kΩ

284 kHz ≤ fMOSC ≤ 546 kHz

If any other constants than specified above are used, the range of Rext=3kΩ to 20kΩ, Cext=150pF to 390pF must be observed. (See Fig. 8.)

(*7) : The oscillation frequency at VDD=5.0V, Ta=+25°C must be in the range of 350kHz to 500kHz.

(*8) : The oscillation frequency at VDD=2.2 to 6.0V and Ta=-40°C to +85°C must be within the operation clock frequency range.

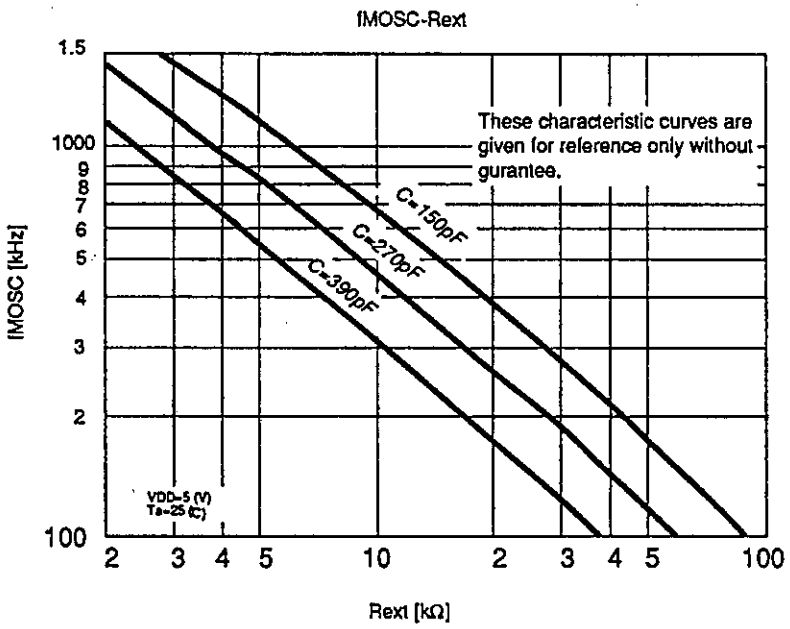

Fig. 8 RC Oscillation Frequency Data (Typ.)

Notes for Standby Function Application

The LC6543/46 provide the standby function called HALT mode to minimize the current dissipation when the program is in the wait state.
The standby function is controlled by the HALT instruction, PA pin, $\overline{RES}$ pin, and serial transfer completion signal. A peripheral circuit and program must be so designed as to provide precise control of the standby function. In most applications where the standby function is performed, voltage regulation, instantaneous break of power, and external noise are not negligible. When disigning an application circuit and program, whether or not to take some measures must be considered according to the extent to which these factors are allowed. This section mainly describes power failure backup for which the standby function is mostly used. A sample application circuit where the standby function is performed precisely is shown below and notes for circuit design and program design are also given below.
When using the standby function, the application circuit shown below must be used and the notes must be also fully observed.
If any other method than shown in this section is applied, it is necessary to fully check the environmental conditions such as power failure and the actual operation of application equipment.

1. HALT mode release conditions

1-1. Supplementary description of release by serial transfer completion signal.
On completion of serial transfer, the HALT mode is released and the execution of the program starts with an instruction immediately following the HALT instruction. This function can be used to execute the program only when serial transfer occurs, placing the program in the wait state when no serial transfer occurs. This function is effective in reducing the current dissipation or clock noise.

— Notes —
- Release by the serial transfer completion signal is available only when the RC mode is used for system clock generation; and unavailable when the ceramic resonator mode is used.
- On completion of serial transfer, the HALT mode is released unconditionally. In an application, such as capacitor backup application, where the current dissipation must be kept as low as possible during backup and serial transfer by external clock is also used, the HALT mode is released when serial data is transferred externally during backup.

1-2. Summary of HALT release conditions
The HALT mode setting, release conditions are shown in Table 1.

Table 1 HALT mode setting, release conditions

HALT mode setting conditions	HALT mode release conditions
HALT instruction Provided that PA_3 (PA_3 to PA_0 or PA_3 is program-selectable) is at high level.	1 Reset (Low level is applied to $\overline{RES}$.) 2 Low level is applied to PA_3 (PA_3 to PA_0 or PA_3 is program-selectable.) 3 Serial transfer completion.

Note) HALT mode release conditions 2, 3 are available only when the RC mode is used for system clock generation; and unavailable when the ceramic resonator mode is used.

2. Proper cares in using standby function

When using the standby function, an application circuit and program must be designed with the following in mind.

(1) The supply voltage at the standby state must not be less than specified.
(2) Input timing and conditions of each control signal ($\overline{RES}$, port A, serial transfer) must be observed at the standby initiate/release state.
(3) Release operation must not be overlapped at the time of execution of the HALT instruction.

A sample application where the standby function is used for power failure backup is shown below as a concrete method to observe these notes. A sample application circuit, its operation, and notes for program design are given below.

Sample application where the standby function is used for power failure backup

Power failure backup is an application where power failure of the main power source is detected and the HALT instruction is executed to cause the standby state to be entered. The current dissipation is minimized and a backup capacitor is used to retain the contents of the internal registers for a certain period of time. After power is restored, a reset occurs automatically and the execution of the program starts at address 000H of the program counter (PC). Shown below are sample applications where the program selects or not between power-ON reset and reset after power is restored, notes, measures for instantaneous break of AC power, and notes for serial transfer.

2-1. Sampel application 1 where the standby function is used for power failure backup.

Shown below is a sample application where the program does not select between power-ON reset and reset after power is restored.

2-1-1. Sample application circuit — (1)

Fig. 2-1 shows a sample application where the standby function is used for power failure backup.

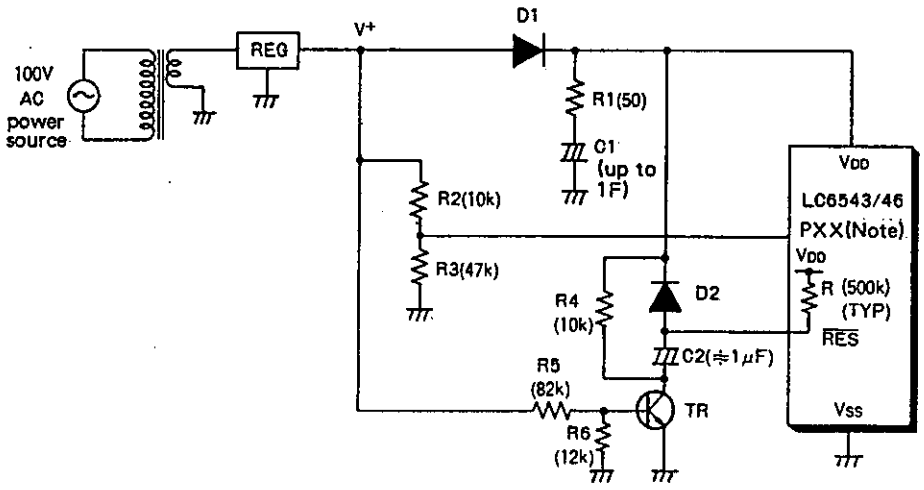

(Note) Normal input ports other than PA_3

Fig. 2-1. Sample application — (1) where the standby function is used for power failure backup

2-1-2. Operating waveform in sample application circuit – (1)

The operating waveform in the sample application circuit in Fig. 2-1 is shown in Fig. 2-2. The mode is roughly divided as follows:

(a) Power-ON reset
(b) Instantaneous break of main power source
(c) Return from power failure backup

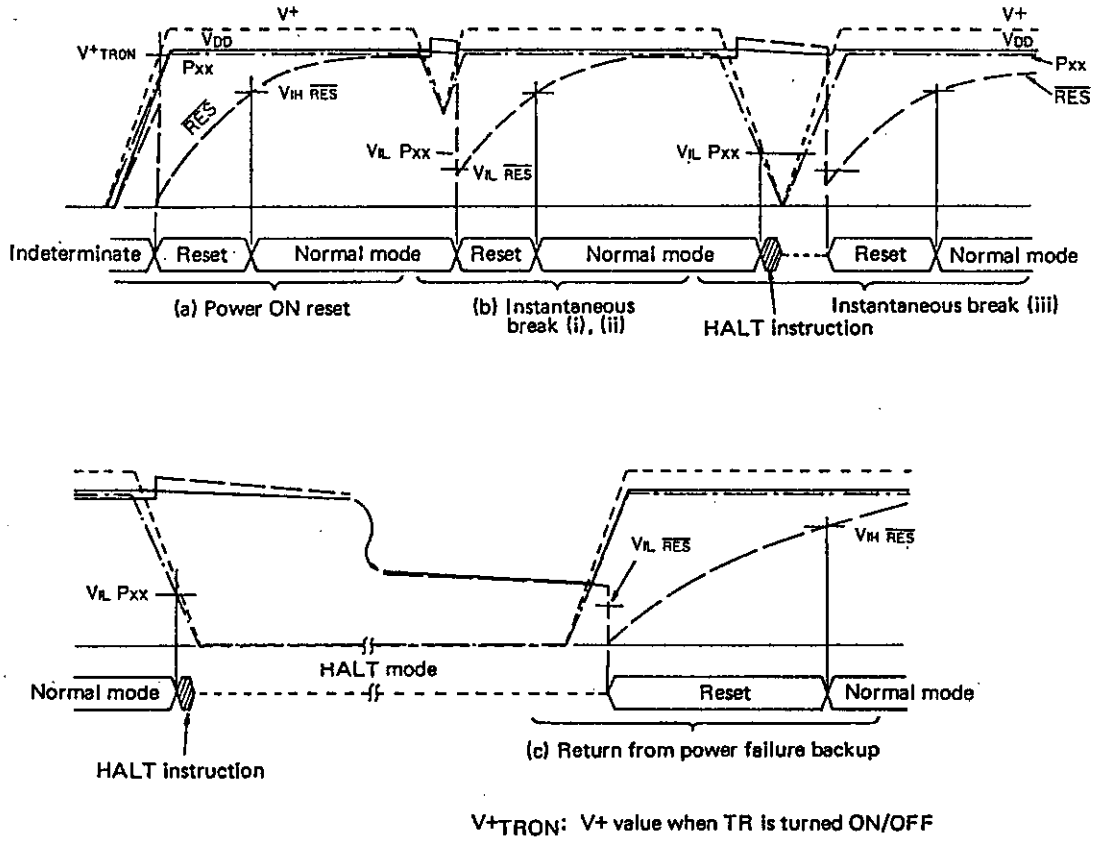

Fig. 2-2 Operating waveform in sample application circuit – (1)

2-1-3. Operation of sample application circuit – (1)

(a) At the time of power-ON reset
After power rises, a reset occurs automatically and the execution of the program starts at address 000H of the program counter (PC).

– Note –
This sample application circuit provides an indeterminate region where no reset occurs before the operating V_{DD} range is entered.

(b) At the time of instantaneous break

(i) When the P_{XX} input voltage does not meet V_{IL} (the P_{XX} input level does not get lower than input threshold level V_{IL}) and the $\overline{RES}$ input voltage only meets V_{IL}:
A reset occurs in the normal mode, providing the same operation as power-ON reset.

(ii) When both of the P_{XX} input voltage and $\overline{RES}$ input voltage do not meet V_{IL}:
The program continues running in the normal mode.

(iii) When both of the P_{XX} input voltage and $\overline{RES}$ input voltage meet V_{IL}:
When two pollings do not regard the P_{XX} input voltage as "L" level, the HALT mode is not entered and a reset occurs.
When two pollings regard the P_{XX} input voltage as "L" level, the HALT mode is entered and after power is restored a reset occurs, releasing the standby mode.

(c) At the time of return from power failure backup
After power is restored, a reset occurs, releasing the standby mode.

2-1-4. Notes for design of sample application circuit – (1)

- V+ rise time and C2
  Make the time constant (C2, R) of the reset circuit 10 times as long as the V^+ rise time. (R: ON-chip resistor, 500kohms typ.)
  Make the V^+ rise time shorter (up to 20ms).
- R1 and C1
  Make the R1 value as small as possible. Make the C1 value as large as possible according to the backup time calculated. (Fix the R1 value so that the C1 charging current does not exceed the power source capacity.)
- R2 and R3
  Make the "H"-level input voltage applied to the P_{XX} pin equal to V_{DD}.
- R4
  Fix the time constant of C2 and R4 so that C2 can discharge during the period of time from when V^+ gets lower than V^+_{TRON} (TR OFF) at the time of instantneous break until the P_{XX} input voltage gets lower than V_{IL} (because release by reset is not available after the HALT mode is entered by instantaneous break).
- R5 and R6
  Make V^+ (V_{BE}≒0.6V is obtained by R5 and R6) when the reset circuit works (Tr ON) more than (operating V_{DD} min + V_F of diode D1). Observing this note, make V^+ as low as possible to provide a reset early enough after power-ON.
- Backup time
  The normal operation continues with a relatively high current dissipation from when power failure is detected by the P_{XX} until the HALT instruction is executed. Fix the C1 value so that the standby supply voltage is held during backup time of set + above-mentioned time.

2-1-5. Notes for software design

- Design the program so that port A_0 to A_2 cannot be used for standby release and port A_3 is brought to "H" level at the standby mode.
- Check a standby request by polling the input port twice.

(Example)

```
        :
        BP1     AAA     ;1st polling
        RCTL    3       ;Interrupt inhibit
        BP1     AAA     ;2nd polling
        HALT            ;Standby
AAA:    :
```

2-2. Sample application 2 where the standby function is used for power failure backup

Shown below is a sample application where the program selects between power-ON reset and reset after power is restored.

2-2-1. Sample application circuit — (2) (No instantaneous break in power source)

Fig. 2-3 shows a sample application where the standby function is used for power failure backup.

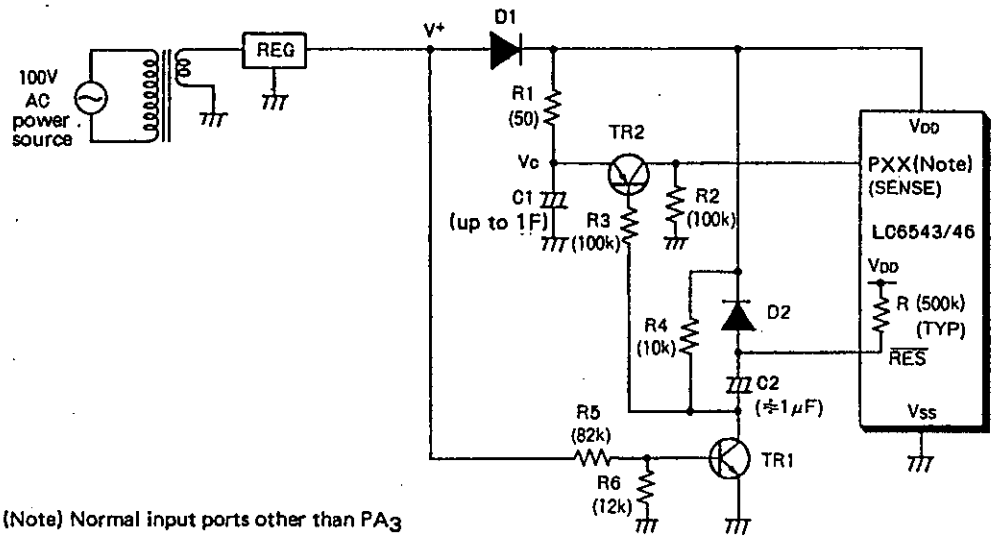

(Note) Normal input ports other than PA_3

Fig. 2-3. Sample application — (2) where the standby function is used for power failure backup

2-2-2. Operating waveform in sample application circuit — (2)

The operating waveform in the sample application circuit in Fig. 2-3 is shown in Fig. 2-4. The mode is roughly divided as follows:

(1) Power-ON reset
(2) Return from power failure backup

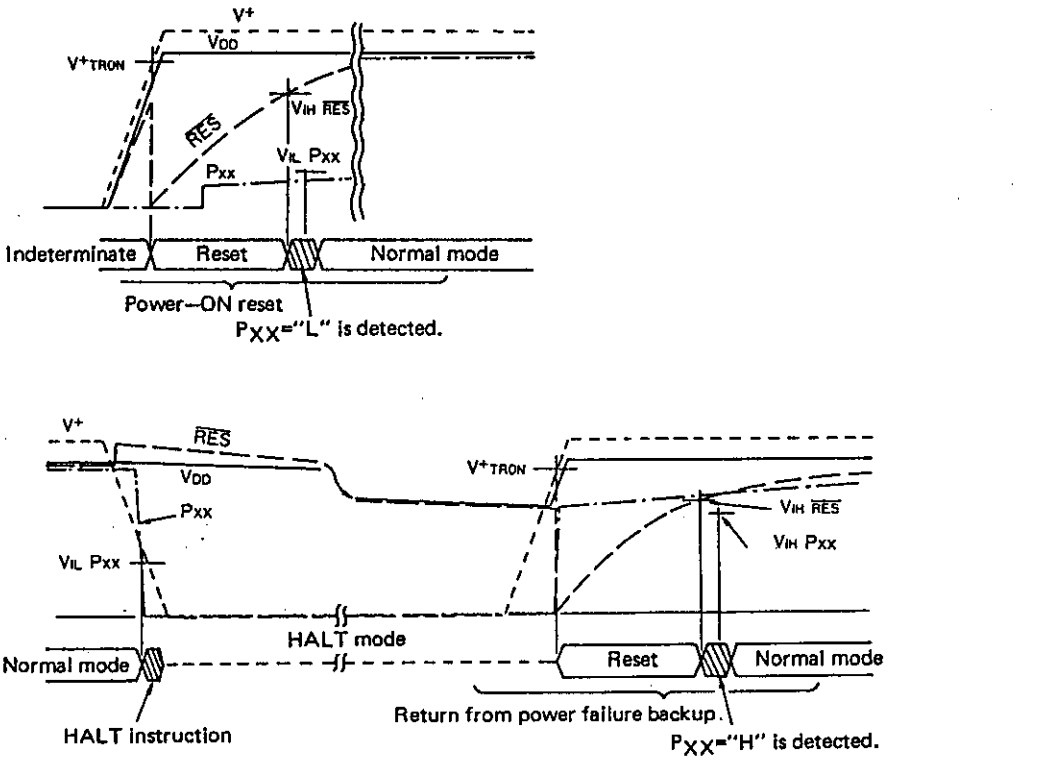

V^+_{TRON}: V+ value when TR1 is turned ON/OFF.

Fig. 2-4. Operating waveform in sample application circuit — (2)

2-2-3. Operation of sample application circuit — (2)

(a) At the time of power-ON reset
The operation and notes are the same as for sample application circuit — (1), except that after reset release P_{XX}="L" is program-detected to decide program start after initial reset.

(b) Standby initiation
When one polling regards the P_{XX} input voltage as "L" level, the HALT mode is entered.

(c) At the time of return from power failure backup
After power is restored, a reset occurs, releasing the standby mode. After standby release P_{XX}="H" is program-detected, deciding program start after power is restored.

— Note —
If power is restored after V_{DD} during power failure backup gets lower than V_{IH} on the P_{XX}, P_{XX}="L" may be program-detected, deciding program start after initial reset.

2-2-4. Notes for design of sample application circuit — (2)

- R2 and R3
  Fix the R2 value so that R2≫R1 is yielded and fix the R3 value so that I_B of TR2 is limited.
- R4
  There is no severe restriction on the R4 value, but fix it so that C2 can discharge quickly.
  Other notes are the same as for sample application circuit — (1).

2-2-5. Notes for software design

- Design the program so that port A_0 to A_2 cannot be used for standby release and port A_3 is brought to "H" level.
- Check a standby request by polling the input port once.

(Example)

```
        :
        BP1     AAA     ;Polling
        HALT            ;Standby
AAA:    :
```

2-3. Sample application 3 where the standby function is used for power failure backup.

2-3-1. Sample application circuit — (3) (There is an instantaneous break in power source.)
Fig. 2-5 shows a sample application where the standby function is used for power failure backup.

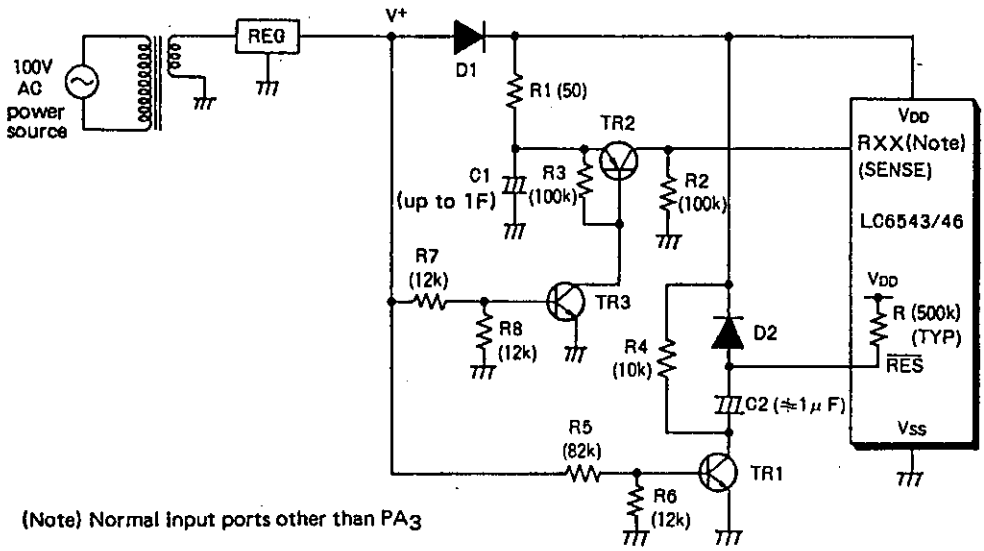

Fig. 2-5. Sample application — (3) where the standby function is used for power failure backup

2-3-2. Operating waveform in sample application circuit — (3)
The operating waveform in the sample application circuit in Fig. 2-5 is shown in Fig. 2-6. The mode is roughly divided as follows:

(1) Power-ON reset
(2) Instantaneous break of main power source
(3) Return from power failure backup

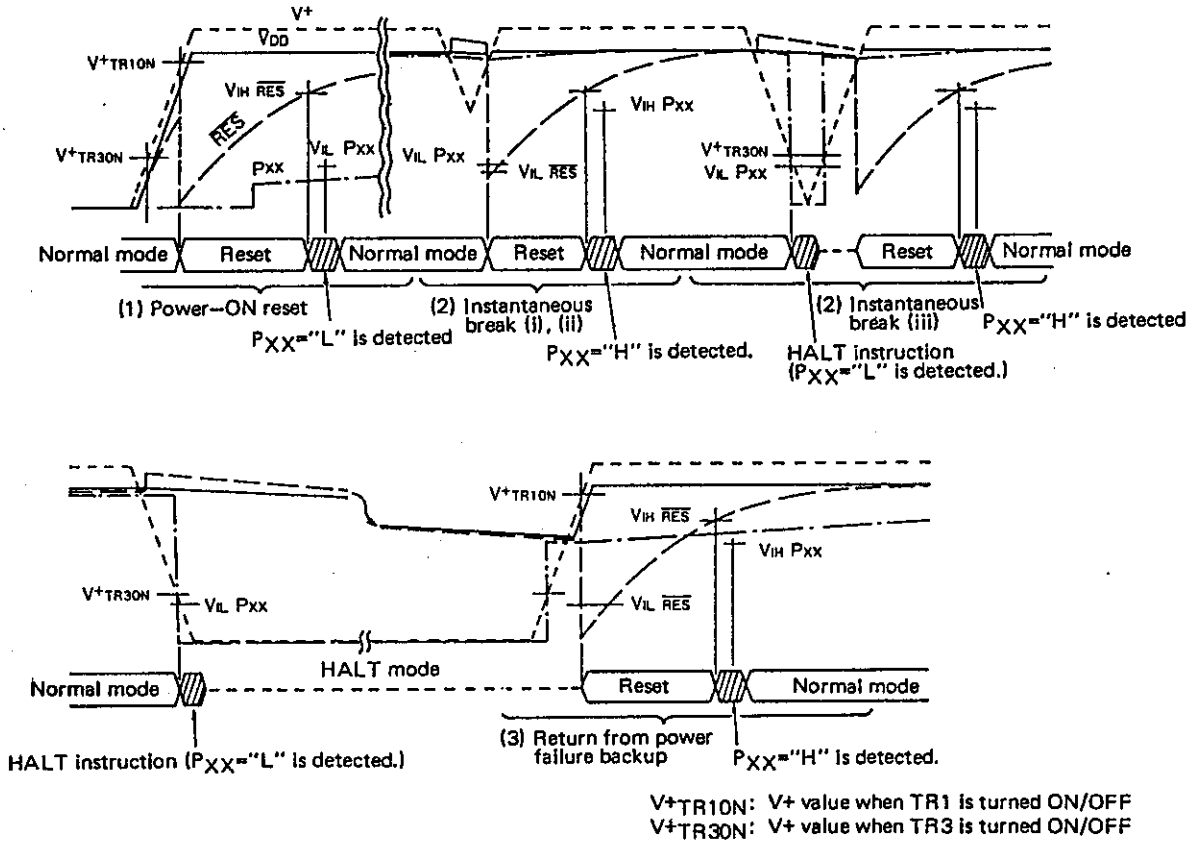

Fig. 2-6. Operating waveform in sample application circuit — (3)

2-3-3. Operation of sample application circuit – (3)

(a) At the time of power-ON reset
The operation and notes are the same as for sample application circuit – (2)

(b) At the time of instantaneous break

(i) When the P_{XX} input voltage does not meet V_{IL} (the P_{XX} input level does not get lower than input threshold level V_{IL}) and the $\overline{RES}$ input voltage only meets V_{IL}:
A reset occurs in the normal mode. After reset release P_{XX}="H" is program-detected, deciding program start after instantaneous break.

(ii) When both of the P_{XX} input voltage and $\overline{RES}$ input voltage do not meet V_{IL}:
The program continues running in the normal mode.

(iii) When both of the P_{XX} input voltage and $\overline{RES}$ input voltage meet V_{IL}:
When two pollings do not regard the P_{XX} input voltage as "L" level, the HALT mode is not entered and a reset occurs.
When two pollings regard the P_{XX} input voltage as "L" level, the HALT mode is entered and after power is restored a reset occurs, releasing the standby mode. After standby release P_{XX}="H" is program-detected, deciding program start after instantaneous break.

(c) At the time of return from power failure backup
The operation and notes are the same as for sample application circuit – (2)

2-3-4. Notes for design of sample application circuit – (3)

- R3
  Bias resistance of TR2
- R7 and R8
  Fix the R7 and R8 values so that TR3 is turned ON/OFF at approximately 1.5V of V+.

Other notes are the same as for sample application circuit – (1)

2-3-5. Notes for software design
Same as for sample application circuit – (1)

2-4. Notes (1) for providing serial transfer
Notes for providing power failure backup and serial transfer
This application assigns top priority to power failure backup. When power failure backup is provided, serial transfer may not be provided normally.

(1) When the internal clock is used for the serial clock:
Execute the serial transfer start instruction immediately before executing the HALT instruction. If this is done during serial transfer, the power failure backup mode is entered without normal transfer.

(2) When the external clock is used for the serial clock:
When power failure is detected, it is most prioritized that the HALT mode is entered, providing power failure backup. It is necessary to design an application system where no release signal by serial transfer completion is input to the HALT instruction execution cycle and no release signal is input during backup.

2-5. Notes (2) for providing serial transfer
Notes for providing HALT and serial transfer for program standby without power failure backup
This application assigns top priority to serial transfer. The following notes for system design must be observed.

(1) When the internal clock is used for the serial clock:
Transfer starts when it is ready on both sides. When transfer is not ready on the other side, the HALT instruction is executed to reduce the current dissipation. When transfer is ready, the HALT release signal ($\overline{RES}$, PA) causes return from the standby mode, starting serial transfer.

(2) When the external clock is used for the serial clock:
Synchronization must be provided between microcomputers to prevent the HALT instruction and HALT release signal (RSIOEND) from overlapping. When transfer is ready, the serial transfer start instruction is executed and the program is placed in the wait state. The other side adjusts time so that no overlap occurs between the HALT instruction and transfer completion and starts serial transfer. On completion of transfer, the HALT mode is released and the program is executed with an instruction immediately following the HALT instruction.

Notes for Program Evaluation

- When evaluating the LC6543/46 with the evaluation chip (LC6594, LC65PG43-A/46-A, LC65PG43/46), the following must be observed.

Classification	Item	Function		Notes for evaluation
		Mass-production chip	Evaluation chip	
Notes for option	2-pin OSC	PI_0 and OSC2 share one pin (PI_0/OSC2). Either of them is selected exclusively by user option. When 2-pin OSC is selected, PI_0/OSC2 pin provides OSC2 and performs no function of PI_0 port. Data input to PI_0/OSC2 by mistake is always read as "0".	Evaluation chip has PI_0 and OSC2 separately. Pin required for option is selected as required. Even when OSC2 pin is selected by option, PI_0 circuit is present and functions as complete port PI_0.	Since input/output at PI_0 on evaluation chip results in difference between evaluation chip operation and mass-production chip operation, input/output at PI_0 is prohibited.
	OSC divider	3 selections (1/1, 1/3, 1/4) by option	3 selections (1/1, 1/3, 1/4) available by 2 pins of DIV pin, 3OR4 pin.	DIV pin, 3OR4 pin must be set according to option specified for mass-production chip.
	Ports C, D output level at reset mode	Ports C, D can be brought to "H" or "L" in a group of 4 bits.	Port C and port D can be brought to "H" and "L" by CHL pin and DHL pin respectively.	CHL pin and DHL pin must be set according to option specified for mass-production chip.
	Port output configuration PU/OD	PU or OD can be selected bitwise.	Only OD without PU.	[LC6594-applied evaluation] External resistor (10kohms) on evaluation board must be connected to necessary port. [Piggyback-applied evaluation] Resistor must be connected to necessary port on application board.
	PU resistor configuration	PU resistor brought to Hi-Z (Pch Tr to turn OFF) at "L" output mode.	PU resistor, being external resistor, whose impedance remains unchanged at "L" output mode.	For mass-production chip, leakage current only flows in Pch Tr at "L" output mode; for evaluation chip, current continues flowing in PU resistor at "L" output mode.

Classification	Item	Function		Notes for evaluation
		Mass-production chip	Evaluation chip	
Notes for OSC	OSC constants —1	[2-pin RC OSC] Catalog-guaranteed constants provide OSC at frequency specified in catalog.	[2-pin RC OSC] Different from mass-production chip in circuit design and characteristic.	[2-pin RC OSC] Frequency must be adjusted to OSC frequency of mass-production chip by adjusting variable resistor.
		[2-pin ceramic resonator OSC] Catalog-guaranteed constants provide OSC at frequency specified in catalog.	[2-pin ceramic resonator OSC] Different from mass-production chip in circuit design and characteristic. Wiring capacitance may provide unstable OSC.	[2-pin ceramic resonator OSC] External constants must be fine-adjusted according to service conditions.
	OSC constants —2	[2-pin ceramic resonator OSC] Feedback resistor is contained.	[2-pin ceramic resonator OSC] No feedback resistor is contained.	[2-pin ceramic resonator OSC] For evaluation chip, feedback resistor of 1Mohm must be connected externally.
Notes for electrical characteristics	OSC frequency	OSC frequency characteristic as indicated in catalog.	Different from mass-production chip in circuit design, and characteristic.	ES, CS must be used to evaluate characteristic in detail. The standby current cannot be evaluated in detail. However, the standby current can be confirmed roughly in the manner discussed later. Be sure to confirm the standby current.
	Operating current, standby current	Current characteristic as indicated in catalog.	Different from mass-production chip in circuit design, and characteristic.	
Notes for operating conditions	Operating voltage	Supply voltage range as indicated in catalog.	Evaluation chip must be also used at V_{DD}=5V±5% at which EPROM, other LSI are used.	
	Operating temperature	Temperature range as indicated in catalog.	Evaluation chip must be used at 10°C to 40°C.	
	Port A input voltage	Input/output configuration of normal threshold input. Input voltage as indicated in catalog.	Input/output configuration of low threshold input. Different from mass-production chip in input/output configuration.	
	Type No. setting	LC6543/46 differ in ROM, RAM capacity.	RAM capacity is set by RAMC pin according to Type No.	SW3-2 on evaluation board is always placed in PA position. SW3-1 is set according to Type No.

(Confirmation methods for the standby function)
The standby current at the standby mode of the simulation chip can be evaluated not exactly but approximately. Then, do the following steps.

(a) Confirmation of the standby state
Be sure to confirm whether or not the LSI enters the standby mode when the standby conditions are satisfied.
(i) When the OSC1 and OSC2 oscillation option is selected, confirm on an oscilloscope that the oscillation stops in the standby mode.
(ii) Confirmation by the current dissipation
Remove the EPROM when confirming whether or not the LSI enters the standby mode. The I_{DD} of the LSI can determine whether or not the LSI is now in the standby mode.
When the LSI is in the operating mode, more than some 100μA current is transmitted. When in the standby mode, the current of the I_{DD} is 150μA or less if the DIV, 30R4, CHL, DHL and RAMC are all set to "H" (excluding the load current). If the DIV, 30R4, ———, etc. are all set to "L", the current of the I_{DD} is approximately 20μA.

(b) Confirmation by the load current
Your program must be designed so that the current is not transmitted to the input/output ports prior to the execution of the HALT instruction. This can reduce the useless dissipation of the load current at the standby mode and be confirmed on an oscilloscope.
(i) Design your program so that the current is not transmitted to the output ports prior to the execution of the HALT instruction.
(ii) Design your program and peripherals so that the input ports and input/output ports are not brought to the floating state at the standby mode.
If brought to the floating state, current flows in the microcomputer input circuit section, causing more current dissipation. Therefore, the backup enable time is shortened extremely in applications where the capacitor backup is used.

Ceramic resonator oscillation constants when the EVA-TB6543/46 is used
When developing your program using te target board EVA-TB6543/46, use the constants shown below because the ceramic resonator oscillation constants depend on the conditions for evaluation and the cable length, etc.

Note) When the evaluation chip is used in the 2-pin ceramic resonator oscillation mode, no feedback resistor is contained unlike the mass-production chip.
Connect a feedback resistor of 1Mohm externally as shown below.
Since constants R, C are also differ from those for the mass-production chip, refer to Table shown below and adjust the capacitor value according to the stray capacitance of the circuit.

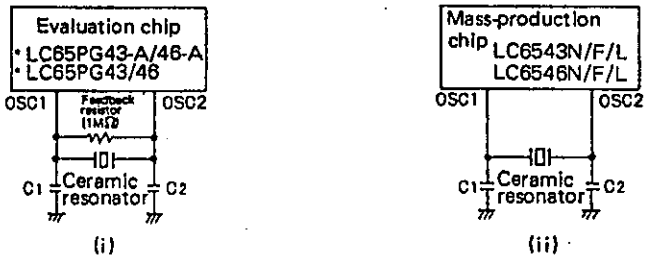

2-pin Ceramic Resonator Oscillation Circuit for
Evaluation Chip and Mass-production Chip

Table of Ceramic Resonator Oscillation Constants when the EVA-TB6543/46 is used

Ceramic resonator			Mas-production chip C1 = C2	Evaluation chip (*)			
				Including capacitance of standard cable		Including no capacitance of standard cable	
				C1 = C2	R	C1 = C2	R
4MHz	CSA4.00MG	(Murata)	33pF	8pF	0 ohm	33pF	0 ohm
	KBR4.0M	(Kyocera)	33pF	10pF	0 ohm	33pF	0 ohm
1MHz	CSB1000K	(Murata)	(CSB1000D used) 220pF	82pF	0 ohm	220pF	0 ohm
	KBR1000H	(Kyocera)	100pF	82pF	0 ohm	220pF	0 ohm
800kHz	CSB800K	(Murata)	(CSB800D used) 220pF	220pF	0 ohm	220pF	0 ohm
	KBR800H	(Kyocera)	220pF	150pF	0 ohm	150pF	0 ohm
400kHz	CSB400P	(Murata)	330pF	470pF	0 ohm	470pF	0 ohm
	KBR400B KBR400H	(Kyocera)	330pF	390pF	0 ohm	330pF	0 ohm

(*) The standard cable is a cable attached to target board EVA-TB6543/46.
The Table shows two cases where the capacitance of the cable is included and no capacitance of the cable is included.

- Example where the capacitance of the cable is included
  The capacitance of the cable is included when the resonator is connected to the user's application board through the cable from the EVA-TB6543/46.
- Example where no capacitance of the cable is included
  No capacitance of the cable is included when the resonator is placed near the evaluation chip (on the EVA-TB6543/46).

When using any other cable than the attached cable, adjust the capacitor value according to the stray capacitance.

How to use the piggyback chip (LC65PG43/46-A)

(1) Layout of pins and control pads, and External dimensions

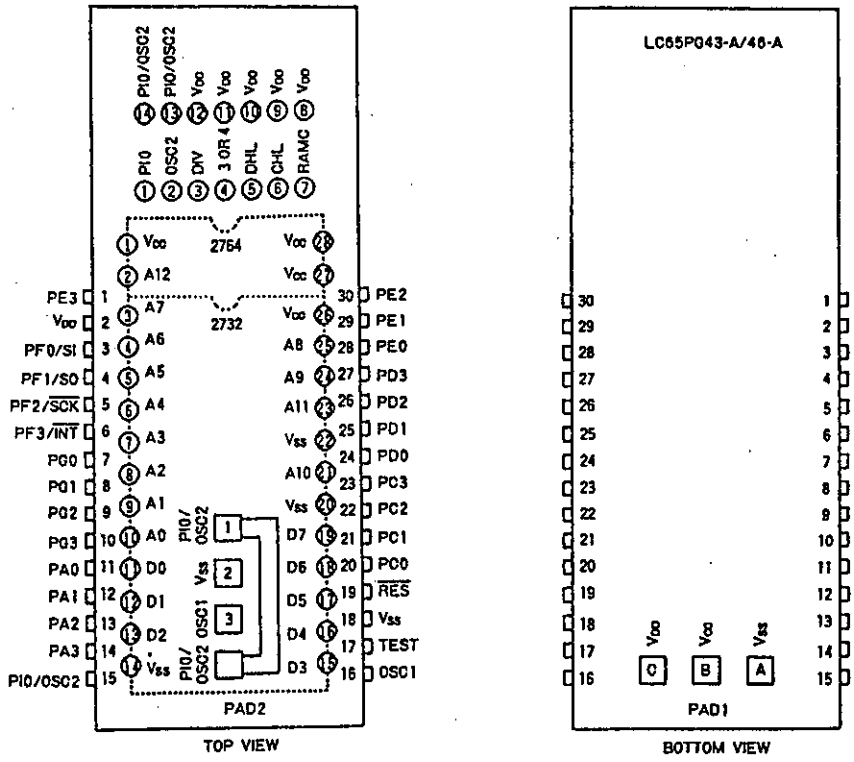

PAD1: Power supply pad
PAD2: Mounting pad for oscillation circuit components

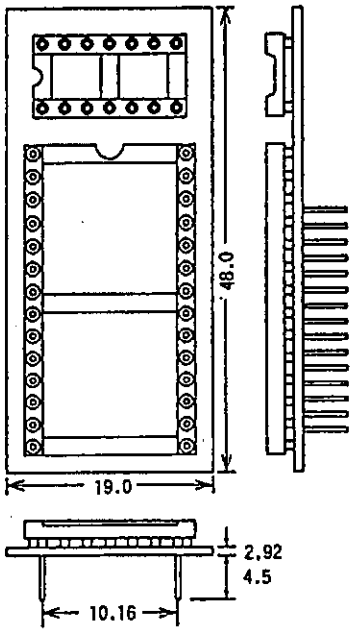

(2) How to mount EPROM

The EPROM to be mounted should contain an already-assembled program data. To write data to the EPROM, use the EPROM writer function on the EVA-800 or EVA-410C board. The mountable EPROM is an Intel 2732, 2764 or their equivalents.

EPROM (2732 or 2764) for program data

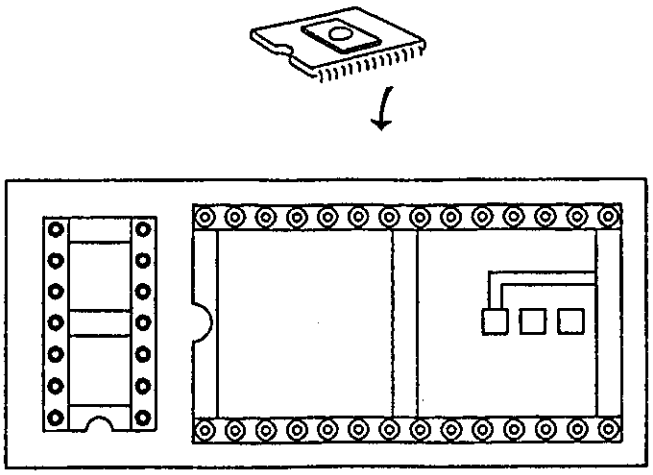

(3) Power supply for EPROM

A typical EPROM dissipates the current of 50mA to 100mA. If the power capacity of an application product board is not sufficient, use an independent power supply circuit to provide the EPROM with the current externally.

a) At the factory shipment, the EPROM uses the same power supply circuit as the simulation chip does. To supply external current to the EPROM, the EPROM power supply selection jumpers are provided on the reverse side of the simulation chip. At the factory shipment, the circuit connection is arranged so that current can be supplied to the EPROM through the power supply pin (V_{DD} pin) of the simulation chip.

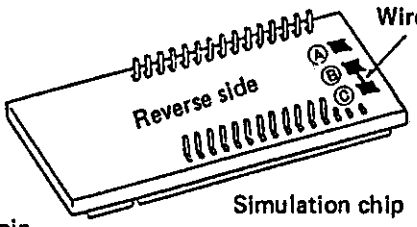

(A) Connected to the GND (0V) pin.
(B) Connected to the EPROM power supply pin.
(C) Connected to the power supply pin of the simulation chip.

[Note that the circuit connection is arranged at the factory shipment so that the current can be supplied to an EPROM through the simulation chip.]

b) To supply current to an EPROM externally from an independent power source

Disconnect pattern (B) from pattern (C).

Connect the power supply pin (+5V) of an external independent power source circuit to pattern (B) and then the other pin to pattern (A)(GND).

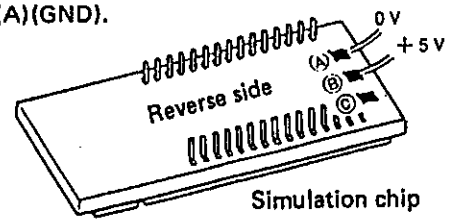

[To supply current to an EPROM from an external power source circuit.]

(Note) A simulation chip is an LSI produced in CMOS process technology.

The simulation chip will suffer from a "latch up" which is specific to CMOS LSIs if the voltage below the V_{SS} level is applied to input pins and output pins, or if the voltage above the V_{DD} level is applied such pins. The latch up problem may damage or degrade the device. To prevent it, much care should be taken to the power supply circuit design for the simulation chip and an EPROM.

In turning on a simulation chip and an EPROM, the simulation chip should be the first and the EPROM, the second. To turn off them, the order is reversed.

(4) Switches and pad for option selection

a) Switches for CPU-function settings

On the simulation chip are provided the switches for selecting a RAM capacity, a desired CPU and its stack level, output logic level at reset for ports C and D, divider circuit's divide ratio, and PI0/OSC2 pin function. These switches are provided on the surface of the simulation chip board.

The figure below shows the outline of the above switches. The switch settings will be described in the item dealing with option specification methods.

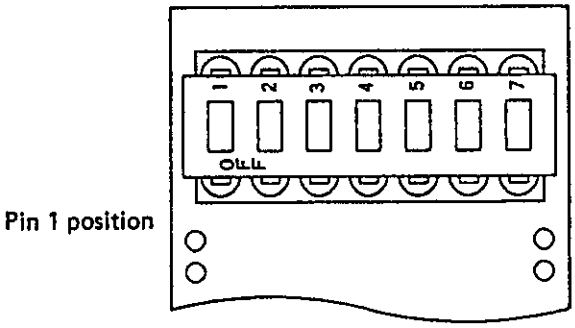

Switch 1 (PI0) . . . . . .Sets the PI0/OSC2 pin to the port 10 for input/output.
Switch 2 (OSC2) . . . . .Sets the PI0/OSC2 pin to the OSC2 pin for oscillation.
Switch 3 (DIV) . . . . . }Selects the divide ration for the divider circuit.
Switch 4 (3 or 4) . . . . }
Switch 5 (DHL) . . . . .Select the output logic at the reset for port D.
Switch 6 (CHL) . . . . . .Select the output logic at the reset for port C.
Switch 7 (RAMC) . . . .Select a desired CPU from LC6543 and LC6546.

b) Pad 2

The pad 2 is provided on the piggyback LSI to mount oscillation components. Add an external resistor according to a selected oscillation option. The switch settings will be described in the item dealing with option specification methods.

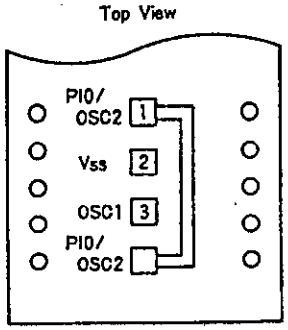

OSC1 : connected to the OSC1 pin of the LSI.
PI0/OSC2 : connected to the PI0/OSC2 pin of the LSI.
V_{SS} : connected to the V_{SS} pin of the LSI.

(5) Option specification methods

a) Option specification method for oscillation circuits

Oscillation circuits can be selected by using the PAD2 and CPU-function setting switches.

(i) Ceramic oscillation circuit

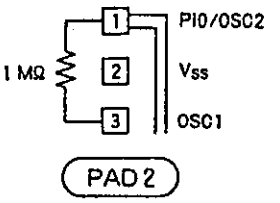

- Connect the PI0/OSC2 pin with the OSC1 pin through an external resistor of 1MΩ.
- For the oscillation constants of an application board, refer to the catalog.
  Fine control may be needed because the ideal RC constant will change due to mounting conditions.

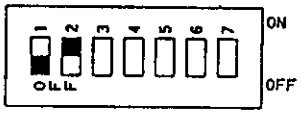

- Switch 1 . . .Set it to the OFF side.
  Switch 2 . . .Set it to the ON side.
- The PI0/OSC2 pin can be used as OSC2 pin for oscillation.

(ii) 2-pins RC oscillation circuit

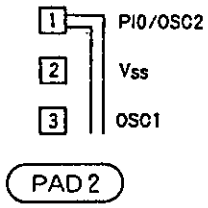

- No external component is required by the PAD2.
- For the oscillation constants of an application board, refer to the catalog.
  Fine control may be needed because the oscillation frequency of a mass-production LSI might differ from that of the application board.



- Switch 1 . . .Set it to the OFF side.
  Switch 2 . . .Set it to the ON side.
- The PI0/OSC2 pin can be used as the OSC2 pin for oscillation.

(iii) External clock circuit

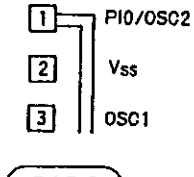

- No external component is required by the PAD2.

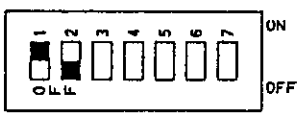

- Switch 1 . . .Set it to the ON side.
  Switch 2 . . .Set it to the OFF side.
- The PI0/OSC2 pin can be used as the input/output PI0 port.

b) Option specification method for dividers
Dividers can be selected by using the CPU-function setting switches.
(i) 1/1 divider circuit



- Switch 3 . . .Set it to the OFF side.
  Switch 4 . . .Set it to either side.

(ii) 1/3 divider circuit



- Switch 3 . . .Set it to the ON side.
  Switch 4 . . .Set it to the ON side.

(iii) 1/4 divider circuit

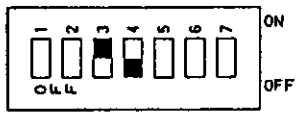

- Switch 3 . . .Set it to the ON side.
  Switch 4 . . .Set it to the OFF side.

c) Option specification method for the output logics of ports C and D at reset
The output logics of ports C and D at the reset can be specified by using the CPU-function setting switches.
Switch 5 (DHL) . . . . .Select the output logic of port D at the reset from H and L.
Switch 6 (CHL). . . . . .Select the output logic of port C at the reset from H and L.
(i) To set the logic level of port D or C at the initial reset to "H" (output OFF in case of open drain output)

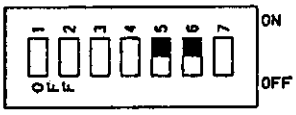

- Set switch 5 or switch 6 to the ON side.
- The output logic level of port D or C at the initial reset can be specified independently.

(ii) To set the logic level of port D or C at the initial reset to "L".

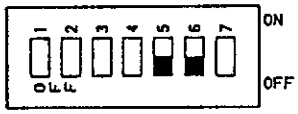

- Set switch 5 or switch 6 to the OFF side.
- The output logic level of port D or C at the initial reset can be specified independently.

d) Option specification method for evaluated CPUs
Evaluated microcomputers can be specified by using the CPU-function setting switches.
(i) To develop user application programs for the LC6543 microcomputers.

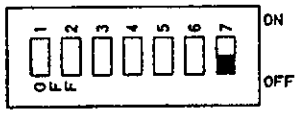

- Set switch 7 to the OFF side.

(ii) To develop user application programs for the LC6546 microcomputers.

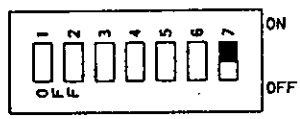

- Set switch 7 to the ON side.

LC6543, LC6546 SERIES INSTRUCTION SET (BY FUNCTIONS)

Symbol	Description				
AC	: Accumulator	M(DP)	: Memory addressed by DP	( ), [ ]	: Contents
ACi	: Accumulator bit i	$P(DP_L)$	: Input/output port addressed by DP_L	←	: Transfer and direction
CF	: Carry flag	PC	: Program counter	+	: Addition
CTL	: Control register	STACK	: Stack register	−	: Subtraction
DP	: Data pointer	TM	: Timer	∧	: AND
E	: E register	TMF	: Timer (internal) interrupt request flag	∨	: OR
EXTF	: External interrupt request flag	At, Ha, La	: Working register	∀	: Exclusive OR
Fn	: Flag bit n	ZF	: Zero flag		
M	: Memory				

Instruction group	Mnemonic		Instruction code $D_7D_6D_5D_4$	Instruction code $D_3D_2D_1D_0$	Bytes	Cycles	Function	Description	Status flag affected	Remarks
Accumulator manipulation instructions	CLA	Clear AC	1 1 0 0	0 0 0 0	1	1	AC ← 0	The AC contents are cleared.	ZF	* 1
	CLC	Clear CF	1 1 1 0	0 0 0 1	1	1	CF ← 0	The CF contents are cleared.	CF	
	STC	Set CF	1 1 1 1	0 0 0 1	1	1	CF ← 1	The CF is set.	CF	
	CMA	Complement AC	1 1 1 0	1 0 1 1	1	1	AC ← $\overline{(AC)}$	The AC contents are complemented.	ZF	
	INC	Increment AC	0 0 0 0	1 1 1 0	1	1	AC ← (AC) + 1	The AC contents are incremented +1.	ZF CF	
	DEC	Decrement AC	0 0 0 0	1 1 1 1	1	1	AC ← (AC) − 1	The AC contents are decremented −1.	ZF CF	
	RAL	Rotate AC left through CF	0 0 0 0	0 0 0 1	1	1	AC_0 ← (CF), AC_{n+1} ← (AC_n), CF ← (AC_3)	The AC contents are shifted left through the CF.	ZF CF	
	TAE	Transfer AC to E	0 0 0 0	0 0 1 1	1	1	E ← (AC)	The AC contents are transferred to the E.		
	XAE	Exchange AC with E	0 0 0 0	1 1 0 1	1	1	(AC) ⇄ (E)	The AC contents and the E contents are exchanged.		
Memory manipulation instructions	INM	Increment M	0 0 1 0	1 1 1 0	1	1	M(DP) ← (M(DP)) + 1	The M(DP) contents are incremented +1.	ZF CF	
	DEM	Decrement M	0 0 1 0	1 1 1 1	1	1	M(DP) ← (M(DP)) − 1	The M(DP) contents are decremented −1.	ZF CF	
	SMB bit	Set M data bit	0 0 0 0	1 0 B_1B_0	1	1	M(DP. B_1B_0) ← 1	A single bit of the M(DP) specified with B_1B_0 is set.		
	RMB bit	Reset M data bit	0 0 1 0	1 0 B_1B_0	1	1	M(DP. B_1B_0) ← 0	A single bit of the M(DP) specified with B_1B_0 is reset.	ZF	
Arithmetic operation/comparison instructions	AD	Add M to AC	0 1 1 0	0 0 0 0	1	1	AC ← (AC) + (M(DP))	Binary addition of the AC contents and the M(DP) contents is performed and the result is stored in the AC.	ZF CF	
	ADC	Add M to AC with CF	0 0 1 0	0 0 0 0	1	1	AC ← (AC) + (M(DP)) + (CF)	Binary addition of the AC, CF contents and the M(DP) contents is performed and the result is stored in the AC.	ZF CF	
	DAA	Decimal adjust AC in addition	1 1 1 0	0 1 1 0	1	1	AC ← (AC) + 6	6 is added to the AC contents.	ZF	
	DAS	Decimal adjust AC in subtraction	1 1 1 0	1 0 1 0	1	1	AC ← (AC) + 10	10 is added to the AC contents.	ZF	
	EXL	Exclusive or M to AC	1 1 1 1	0 1 0 1	1	1	AC ← (AC) ∀ (M(DP))	The AC contents and the M(DP) contents are exclusive-ORed and the result is stored in the AC.	ZF	
	AND	And M to AC	1 1 1 0	0 1 1 1	1	1	AC ← (AC) ∧ (M(DP))	The AC contents and the M(DP) contents are ANDed and the result is stored in the AC.	ZF	
	OR	Or M to AC	1 1 1 0	0 1 0 1	1	1	AC ← (AC) ∨ (M(DP))	The AC contents and the M(DP) contents are ORed and the result is stored in the AC.	ZF	
	CM	Compare AC with M	1 1 1 1	1 0 1 1	1	1	$\overline{(M(DP))}$ + (AC) + 1	The AC contents and the M(DP) contents are compared and the CF and ZF are set/reset. (M(DP)) > (AC): CF 0, ZF 0; (M(DP)) = (AC): CF 1, ZF 1; (M(DP)) < (AC): CF 1, ZF 0	ZF CF	
	CI data	Compare AC with immediate data	0 0 1 0 0 1 0 0	1 1 0 0 $I_3I_2I_1I_0$	2	2	$\overline{I_3I_2I_1I_0}$ + (AC) + 1	The AC contents and the immediate data $I_3I_2I_1I_0$ are compared and the ZF and CF are set/reset. $I_3I_2I_1I_0$ > (AC): CF 0, ZF 0; $I_3I_2I_1I_0$ = (AC): CF 1, ZF 1; $I_3I_2I_1I_0$ < (AC): CF 1, ZF 0	ZF CF	
	CLI data	Compare DP_L with immediate data	0 0 1 0 0 1 0 1	1 1 0 0 $I_3I_2I_1I_0$	2	2	(DP_L) ∀ $I_3I_2I_1I_0$	The DP_L contents and the immediate data $I_3I_2I_1I_0$ are compared.	ZF	
Load/store instructions	LI data	Load AC with immediate data	1 1 0 0	$I_3I_2I_1I_0$	1	1	AC ← $I_3I_2I_1I_0$	The immediate data $I_3I_2I_1I_0$ is loaded in the AC.	ZF	* 1
	S	Store AC to M	0 0 0 0	0 0 1 0	1	1	M(DP) ← (AC)	The AC contents are stored in the M(DP).		
	L	Load AC from M	0 0 1 0	0 0 0 1	1	1	AC ← (M(DP))	The M(DP) contents are loaded in the AC.	ZF	
	XM data	Exchange AC with M, then modify DP_H with immediate data	1 0 1 0	0 $M_2M_1M_0$	1	2	(AC) ⇄ (M(DP)) DP_H ← (DP_H) ∀ 0 $M_2M_1M_0$	The AC contents and the M(DP) contents are exchanged and then the DP_H contents are modified with the contents of (DP_H) ∀ 0 $M_2M_1M_0$.	ZF	The ZF is set/reset according to the result of (DP_H) ∀ 0 $M_2M_1M_0$.
	X	Exchange AC with M	1 0 1 0	0 0 0 0	1	2	(AC) ⇄ (M(DP))	The AC contents and the M(DP) contents are exchanged.	ZF	The ZF is set/reset according to the DP_H contents at the time of instruction execution.
	XI	Exchange AC with M, then increment DP_L	1 1 1 1	1 1 1 0	1	2	(AC) ⇄ (M(DP)) DP_L ← (DP_L) + 1	The AC contents and the M(DP) contents are exchanged and then the DP_L contents are incremented +1.	ZF	The ZF is set/reset according to the result of $(DP_L + 1)$.
	XD	Exchange AC with M, then decrement DP_L	1 1 1 1	1 1 1 1	1	2	(AC) ⇄ (M(DP)) DP_L ← (DP_L) − 1	The AC contents and the M(DP) contents are exchanged and then the DP_L contents are decremented −1.	ZF	The ZF is set/reset according to the result of $(DP_L - 1)$
	RTBL	Read table data from program ROM	0 1 1 0	0 0 1 1	1	2	AC E ← ROM (PCh, E, AC)	The contents of ROM addressed by the PC whose low-order 8 bits are replaced with the E and AC contents are loaded in the AC and E.		

Instruction groups	Mnemonic		Instruction code		Bytes	Cycles	Function	Description	Status flag affected	Remarks
			$D_7 D_6 D_5 D_4$	$D_3 D_2 D_1 D_0$						
Data pointer manipulation instructions	LDZ data	Load DP_H with Zero and DP_L with immediate data respectively	1 0 0 0	$I_3 I_2 I_1 I_0$	1	1	$DP_H \leftarrow 0$ $DP_L \leftarrow I_3 I_2 I_1 I_0$	The DP_H and DP_L are loaded with 0 and the immediate data $I_3 I_2 I_1 I_0$ respectively.		
	LHI data	Load DP_H with immediate data	0 1 0 0	$I_3 I_2 I_1 I_0$	1	1	$DP_H \leftarrow I_3 I_2 I_1 I_0$	The DP_H is loaded with the immediate data $I_3 I_2 I_1 I_0$.		
	IND	Increment DP_L	1 1 1 0	1 1 1 0	1	1	$DP_L \leftarrow (DP_L)+1$	The DP_L contents are incremented +1.	ZF	
	DED	Decrement DP_L	1 1 1 0	1 1 1 1	1	1	$DP_L \leftarrow (DP_L)-1$	The DP_L contents are decremented −1.	ZF	
	TAL	Transfer AC to DP_L	1 1 1 1	0 1 1 1	1	1	$DP_L \leftarrow (AC)$	The AC contents are transferred to the DP_L		
	TLA	Transfer DP_L to AC	1 1 1 0	1 0 0 1	1	1	$AC \leftarrow (DP_L)$	The DP_L contents are transferred to the AC	ZF	
	XAH	Exchange AC with DP_H	0 0 1 0	0 0 1 1	1	1	$(AC) \rightleftarrows (DP_H)$	The AC contents and the DP_H contents are exchanged.		
Working register manipulation instructions	XAt	Exchange AC with working register At		t_1 t_0	1	1	$(AC) \rightleftarrows (At)$	The AC contents and the contents of working register At are exchanged. At is assigned one of A_0, A_1, A_2, A_3 according to $t_1 t_0$.		
	XA0		1 1 1 0	0 0 0 0	1	1	$(AC) \rightleftarrows (A0)$			
	XA1		1 1 1 0	0 1 0 0	1	1	$(AC) \rightleftarrows (A1)$			
	XA2		1 1 1 0	1 0 0 0	1	1	$(AC) \rightleftarrows (A2)$			
	XA3		1 1 1 0	1 1 0 0	1	1	$(AC) \rightleftarrows (A3)$			
	XHa	Exchange DP_H with working register Ha		a	1	1	$(DP_H) \rightleftarrows (Ha)$	The DP_H contents and the contents of working register Ha are exchanged. Ha is assigned either of H0 or H1 according to a.		
	XH0		1 1 1 1	1 0 0 0	1	1	$(DP_H) \rightleftarrows (H0)$			
	XH1		1 1 1 1	1 1 0 0	1	1	$(DP_H) \rightleftarrows (H1)$			
	XLa	Exchange DP_L with working register La		a	1	1	$(DP_L) \rightleftarrows (La)$	The DP_L contents and the contents of working register La are exchanged. La is assigned either of L0 or L1 according to a.		
	XL0		1 1 1 1	0 0 0 0	1	1	$(DP_L) \rightleftarrows (L0)$			
	XL1		1 1 1 1	0 1 0 0	1	1	$(DP_L) \rightleftarrows (L1)$			
Flag manipulation instructions	SFB flag	Set flag bit	0 1 0 1	$B_3 B_2 B_1 B_0$	1	1	$Fn \leftarrow 1$	The flag specified with $B_3 B_2 B_1 B_0$ is set.		
	RFB flag	Reset flag bit	0 0 0 1	$B_3 B_2 B_1 B_0$	1	1	$Fn \leftarrow 0$	The flag specified with $B_3 B_2 B_1 B_0$ is reset.	ZF	The flags are divided into 4 groups of F_0 to F_3, F_4 to F_7, F_8 to F_{11}, F_{12} to F_{15}. The ZF is set/reset according to the 4 bits including a single bit specified with the immediate data $B_3 B_2 B_1 B_0$.
Jump/subroutine instructions	JMP addr	Jump in the current bank	0 1 1 0 $P_7 P_6 P_5 P_4$	1 $P_{10} P_9 P_8$ $P_3 P_2 P_1 P_0$	2	2	$PC \leftarrow P_{10} P_9 P_8 P_7 P_6 P_5 P_4 P_3 P_2 P_1 P_0$	A jump to the address specified with immediate data $P_{10} P_9 P_8 P_7 P_6 P_5 P_4 P_3 P_2 P_1 P_0$ occurs.		
	JPEA	Jump in the current page modified by E and AC	1 1 1 1	1 0 1 0	1	1	$PC_{7\sim0} \leftarrow (E, AC)$	A jump to the address specified with the contents of the PC whose low-order 8 bits are replaced by the E and AC contents occurs.		
	CZP addr	Call subroutine in the zero page	1 0 1 1	$P_3 P_2 P_1 P_0$	1	1	$STACK \leftarrow (PC)+1$ $PC_{15\sim6}, PC_{1\sim0} \leftarrow 0$ $PC_{5\sim2} \leftarrow P_3 P_2 P_1 P_0$	A subroutine in page 0 of bank 0 is called.		
	CAL addr	Call subroutine in the zero bank	1 0 1 0 $P_7 P_6 P_5 P_4$	1 $P_{10} P_9 P_8$ $P_3 P_2 P_1 P_0$	2	2	$STACK \leftarrow (PC)+2$ $PC_{10\sim0} \leftarrow 0 P_{10} P_9 P_8 P_7 P_6 P_5 P_4 P_3 P_2 P_1 P_0$	A subroutine in bank 0 is called.		
	RT	Return from subroutine	0 1 1 0	0 0 1 0	1	1	$PC \leftarrow (STACK)$	A return from a subroutine occurs.		
	RTI	Return from interrupt routine	0 0 1 0	0 0 1 0	1	1	$PC \leftarrow (STACK)$ $CF\ ZF \leftarrow CSF, ZSF$	A return from an interrupt service routine occurs.	ZF CF	
	BANK	Change bank	1 1 1 1	1 1 0 1	1	1		The bank is changed. A pseudo I/O port is specified.		Effective only when used immediately before an I/O instruction or branch instruction
Branch instructions	BAt addr	Branch on AC bit	0 1 1 1 $P_7 P_6 P_5 P_4$	0 0 t_1 t_0 $P_3 P_2 P_1 P_0$	2	2	$PC_{7\sim0} \leftarrow P_7 P_6 P_5 P_4 P_3 P_2 P_1 P_0$ if $AC_t = 1$	If a single bit of the AC specified with the immediate data $t_1 t_0$ is 1, a branch to the address specified with the immediate data $P_7 P_6 P_5 P_4 P_3 P_2 P_1 P_0$ within the same page occurs.		Mnemonic is BA0 to BA3 according to the value of t.
	BNAt addr	Branch on no AC bit	0 0 1 1 $P_7 P_6 P_5 P_4$	0 0 t_1 t_0 $P_3 P_2 P_1 P_0$	2	2	$PC_{7\sim0} \leftarrow P_7 P_6 P_5 P_4 P_3 P_2 P_1 P_0$ if $AC_t = 0$	If a single bit of the AC specified with the immediate data $t_1 t_0$ is 0, a branch to the address specified with the immediate data $P_7 P_6 P_5 P_4 P_3 P_2 P_1 P_0$ within the same page occurs.		Mnemonic is BNA0 to BNA3 according to the value of t.
	BMt addr	Branch on M bit	0 1 1 1 $P_7 P_6 P_5 P_4$	0 1 t_1 t_0 $P_3 P_2 P_1 P_0$	2	2	$PC_{7\sim0} \leftarrow P_7 P_6 P_5 P_4 P_3 P_2 P_1 P_0$ if $(M(DP.t_1 t_0)) = 1$	If a single bit of the M(DP) specified with the immediate data $t_1 t_0$ is 1, a branch to the address specified with the immediate data $P_7 P_6 P_5 P_4 P_3 P_2 P_1 P_0$ within the same page occurs.		Mnemonic is BM0 to BM3 according to the value of t.
	BNMt addr	Branch on no M bit	0 0 1 1 $P_7 P_6 P_5 P_4$	0 1 t_1 t_0 $P_3 P_2 P_1 P_0$	2	2	$PC_{7\sim0} \leftarrow P_7 P_6 P_5 P_4 P_3 P_2 P_1 P_0$ if $(M(DP.t_1 t_0)) = 0$	If a single bit of the M(DP) specified with the immediate data $t_1 t_0$ is 0, a branch to the address specified with the immediate data $P_7 P_6 P_5 P_4 P_3 P_2 P_1 P_0$ within the same page occurs.		Mnemonic is BNM0 to BNM3 according to the value of t.
	BPt addr	Branch on Port bit	0 1 1 1 $P_7 P_6 P_5 P_4$	1 0 t_1 t_0 $P_3 P_2 P_1 P_0$	2	2	$PC_{7\sim0} \leftarrow P_7 P_6 P_5 P_4 P_3 P_2 P_1 P_0$ if $(P(DP_L\ t_1 t_0)) = 1$	If a single bit of port $P(DP_L)$ specified with the immediate data $t_1 t_0$ is 1, a branch to the address specified with the immediate data $P_7 P_6 P_5 P_4 P_3 P_2 P_1 P_0$ within the same page occurs.		Mnemonic is BP0 to BP3 according to the value of t.
	BNPt addr	Branch on no Port bit	0 0 1 1 $P_7 P_6 P_5 P_4$	1 0 t_1 t_0 $P_3 P_2 P_1 P_0$	2	2	$PC_{7\sim0} \leftarrow P_7 P_6 P_5 P_4 P_3 P_2 P_1 P_0$ if $(P(DP_L.t_1 t_0)) = 0$	If a single bit of port $P(DP_L)$ specified with the immediate data $t_1 t_0$ is 0, a branch to the address specified with the immediate data $P_7 P_6 P_5 P_4 P_3 P_2 P_1 P_0$ within the same page occurs.		Mnemonic is BNP0 to BNP3 according to the value of t.
	BTM addr	Branch on timer	0 1 1 1 $P_7 P_6 P_5 P_4$	1 1 0 0 $P_3 P_2 P_1 P_0$	2	2	$PC_{7\sim0} \leftarrow P_7 P_6 P_5 P_4 P_3 P_2 P_1 P_0$ if TMF = 1 then TMF ← 0	If the TMF is 1, a branch to the address specified with the immediate data $P_7 P_6 P_5 P_4 P_3 P_2 P_1 P_0$ within the same page occurs. The TMF is reset.	TMF	

Instruction group	Mnemonic		Instruction code $D_7 D_6 D_5 D_4$	Instruction code $D_3 D_2 D_1 D_0$	Bytes	Cycles	Function	Description	Status flag affected	Remarks
Branch instructions	BNTM addr	Branch on no timer	0 0 1 1 $P_7 P_6 P_5 P_4$	1 1 0 0 $P_3 P_2 P_1 P_0$	2	2	$PC_{7\sim0} \leftarrow P_7P_6P_5P_4P_3P_2P_1P_0$ if TMF = 0 then TMF ← 0	If the TMF is 0, a branch to the address specified with the immediate data $P_7P_6P_5P_4P_3P_2P_1P_0$ within the same page occurs. The TMF is reset.	TMF	
	BI addr	Branch on interrupt	0 1 1 1 $P_7 P_6 P_5 P_4$	1 1 0 1 $P_3 P_2 P_1 P_0$	2	2	$PC_{7\sim0} \leftarrow P_7P_6P_5P_4P_3P_2P_1P_0$ if EXTF = 1 then EXTF ← 0	If the EXTF is 1, a branch to the address specified with the immediate data $P_7P_6P_5P_4P_3P_2P_1P_0$ within the same page occurs. The EXTF is reset.	EXTF	
	BNI addr	Branch on no interrupt	0 0 1 1 $P_7 P_6 P_5 P_4$	1 1 0 1 $P_3 P_2 P_1 P_0$	2	2	$PC_{7\sim0} \leftarrow P_7P_6P_5P_4P_3P_2P_1P_0$ if EXTF = 0 then EXTF ← 0	If the EXTF is 0, a branch to the address specified with the immediate data $P_7P_6P_5P_4P_3P_2P_1P_0$ within the same page occurs. The EXTF is reset.	EXTF	
	BC addr	Branch on CF	0 1 1 1 $P_7 P_6 P_5 P_4$	1 1 1 1 $P_3 P_2 P_1 P_0$	2	2	$PC_{7\sim0} \leftarrow P_7P_6P_5P_4P_3P_2P_1P_0$ if CF = 1	If the CF is 1, a branch to the address specified with the immediate data $P_7P_6P_5P_4P_3P_2P_1P_0$ within the same page occurs.		
	BNC addr	Branch on no CF	0 0 1 1 $P_7 P_6 P_5 P_4$	1 1 1 1 $P_3 P_2 P_1 P_0$	2	2	$PC_{7\sim0} \leftarrow P_7P_6P_5P_4P_3P_2P_1P_0$ if CF = 0	If the CF is 0, a branch to the address specified with the immediate data $P_7P_6P_5P_4P_3P_2P_1P_0$ within the same page occurs.		
	BZ addr	Branch on ZF	0 1 1 1 $P_7 P_6 P_5 P_4$	1 1 1 0 $P_3 P_2 P_1 P_0$	2	2	$PC_{7\sim0} \leftarrow P_7P_6P_5P_4P_3P_2P_1P_0$ if ZF = 1	If the ZF is 1, a branch to the address specified with the immediate data $P_7P_6P_5P_4P_3P_2P_1P_0$ within the same page occurs.		
	BNZ addr	Branch on no ZF	0 0 1 1 $P_7 P_6 P_5 P_4$	1 1 1 0 $P_3 P_2 P_1 P_0$	2	2	$PC_{7\sim0} \leftarrow P_7P_6P_5P_4P_3P_2P_1P_0$ if ZF = 0	If the ZF is 0, a branch to the address specified with the immediate data $P_7P_6P_5P_4P_3P_2P_1P_0$ within the same page occurs.		
	BFn addr	Branch on flag bit	1 1 0 1 $P_7 P_6 P_5 P_4$	$n_3 n_2 n_1 n_0$ $P_3 P_2 P_1 P_0$	2	2	$PC_{7\sim0} \leftarrow P_7P_6P_5P_4P_3P_2P_1P_0$ if Fn = 1	If the flag bit of the 16 flags specified with the immediate data $n_3n_2n_1n_0$ is 1, a branch to the address specified with the immediate data $P_7P_6P_5P_4P_3P_2P_1P_0$ within the same page occurs.		Mnemonic is BF0 to BF15 according to the value of n.
	BNFn addr	Branch on no flag bit	1 0 0 1 $P_7 P_6 P_5 P_4$	$n_3 n_2 n_1 n_0$ $P_3 P_2 P_1 P_0$	2	2	$PC_{7\sim0} \leftarrow P_7P_6P_5P_4P_3P_2P_1P_0$ if Fn = 0	If the flag bit of the 16 flags specified with the immediate data $n_3n_2n_1n_0$ is 0, a branch to the address specified with the immediate data $P_7P_6P_5P_4P_3P_2P_1P_0$ within the same page occurs.		Mnemonic is BNF0 to BNF15 according to the value of n.
Input/Output instructions	IP	Input port to AC	0 0 0 0	1 1 0 0	1	1	AC ← (P(DP$_L$))	Port P(DP$_L$) contents are loaded in the AC.	ZF	
	OP	Output AC to port	0 1 1 0	0 0 0 1	1	1	P(DP$_L$) ← (AC)	The AC contents are outputted to port P(DP$_L$).		
	SPB bit	Set port bit	0 0 0 0	0 1 B_1 B_0	1	2	P(DP$_L$, B_1B_0) ← 1	A single bit in port P(DP$_L$) specified with the immediate data B_1B_0 is set.		When this instruction is executed, the E contents are destroyed.
	RPB bit	Reset port bit	0 0 1 0	0 1 B_1 B_0	1	2	P(DP$_L$, B_1B_0) ← 0	A single bit in port P(DP$_L$) specified with the immediate data B_1B_0 is reset.	ZF	When this instruction is executed, the E contents are destroyed.
Other instructions	SCTL bit	Set control register bit(S)	0 0 1 0 1 0 0 0	1 1 0 0 B_3 B_2 B_1 B_0	2	2	CTL ← (CTL) V $B_3B_2B_1B_0$	The bits of the control register specified with the immediate data $B_3B_2B_1B_0$ are set.		
	RCTL bit	Reset control register bit(S)	0 0 1 0 1 0 0 1	1 1 0 0 B_3 B_2 B_1 B_0	2	2	CTL ← (CTL) A $\overline{B_3B_2B_1B_0}$	The bits of the control register specified with the immediate data $B_3B_2B_1B_0$ are reset.	ZF	
	WTTM	Write timer	1 1 1 1	1 0 0 1	1	1	TM ← (E), (AC) TMF ← 0	The E and AC contents are loaded in the timer. The TMF is reset.	TMF	
	HALT	Halt	1 1 1 1	0 1 1 0	1	1	Halt	All operations stop.		Only when all pins of port PA are set at L, stop.
	NOP	No operation	0 0 0 0	0 0 0 0	1	1	No operation	No operation is performed, but 1 machine cycle is consumed.		

*1 If the CLA instruction is used continuously in such a manner as CLA, CLA, ———, the first CLA instruction only is effective and the following CLA instructions are changed to the NOP instructions. This is also true of the LI instruction.