SPECIFICATION
FOR
APPROVAL

(•) Preliminary Specification
( ) Final Specification

Title	37.0” WXGA TFT LCD

BUYER	
MODEL	-

SUPPLIER	LG.Philips LCD Co., Ltd.
*MODEL	LC370W01
SUFFIX	A5K1

*When you obtain standard approval,
please use the above model name without suffix

APPROVED BY	SIGNATURE DATE
/	
/	
/	

Please return 1 copy for your confirmation with your signature and comments.

APPROVED BY	SIGNATURE DATE
M.H. Park / G.Manager	
REVIEWED BY	
J.H. Yoon / Manager	
PREPARED BY	
S.S. Kim / Engineer	

TV Product Development Dept.
LG. Philips LCD Co., Ltd

Contents

Number	ITEM	Page
	COVER	1
	CONTENTS	2
	RECORD OF REVISIONS	3
1	GENERAL DESCRIPTION	4
2	ABSOLUTE MAXIMUM RATINGS	5
3	ELECTRICAL SPECIFICATIONS	6
3-1	ELECTRICAL CHARACTERISTICS	6
3-2	INTERFACE CONNECTIONS	8
3-3	SIGNAL TIMING SPECIFICATIONS	12
3-4	SIGNAL TIMING WAVEFORMS	13
3-5	COLOR INPUT DATA REFERENCE	14
3-6	POWER SEQUENCE	15
4	OPTICAL SPECIFICATIONS	17
5	MECHANICAL CHARACTERISTICS	21
6	RELIABILITY	24
7	INTERNATIONAL STANDARDS	25
7-1	SAFETY	25
7-2	EMC	25
8	PACKING	26
8-1	DESIGNATION OF LOT MARK	26
8-2	PACKING FORM	26
9	PRECAUTIONS	27
9-1	MOUNTING PRECAUTIONS	27
9-2	OPERATING PRECAUTIONS	27
9-3	ELECTROSTATIC DISCHARGE CONTROL	28
9-4	PRECAUTIONS FOR STRONG LIGHT EXPOSURE	28
9-5	STORAGE	28
9-6	HANDLING PRECAUTIONS FOR PROTECTION FILM	28

Record of Revisions

Revision No.	Revision Date	Page	Description
0.0	Apr.08, 2004	-	**Preliminary Specification(First Draft)**
0.1	May.25, 2004	18	Updated the Gray scale specification.

1. General Description

LC370W01 is a Color Active Matrix Liquid Crystal Display with an integral Cold Cathode Fluorescent Lamp(CCFL) backlight system. The matrix employs a-Si Thin Film Transistor as the active element. It is a transmissive type display operating in the normally black mode. It has a 37.02 inch diagonally measured active display area with WXGA resolution (768 vertical by 1366 horizontal pixel array) Each pixel is divided into Red, Green and Blue sub-pixels or dots which are arranged in vertical stripes. Gray scale or the luminance of the sub-pixel color is determined with a 8-bit gray scale signal for each dot, thus presenting a palette of more than 16.7M(true) colors.
It has been designed to apply the 8-bit 1 port LVDS interface.
It is intended to support LCD TV, PCTV where high brightness, super wide viewing angle, high color gamut, high color depth and fast response time are important.

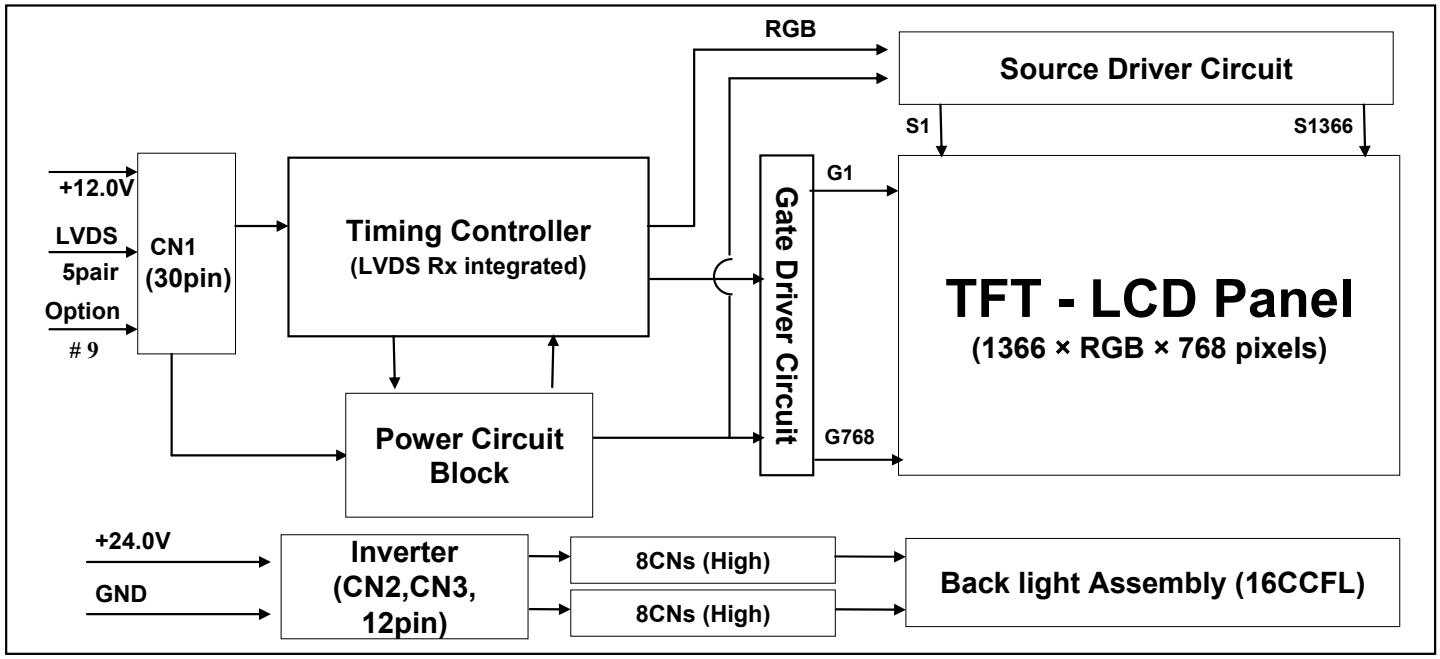

General Features

Active Screen Size	37.02 inches(940.3mm) diagonal
Outline Dimension	877.0/878.0mm(H) x 516.8mm(V) x 55.5mm(D) (Typ.)
Pixel Pitch	0.200mm x 0.600mm x RGB
Pixel Format	1366 horiz. by 768 vert. pixels RGB stripe arrangement
Color Depth	8-bit, 16.7 M colors
Luminance, White	500 cd/m^2 (Center 1 point Typ.)
Viewing Angle (CR>10)	Viewing angle free (R/L 176(Typ.), U/D 176(Typ.))
Power Consumption	Total 125Watt (Typ.) (Logic=4.8W, Lamp=120W [I_{BL}=6.0mA])
Weight	11,500 (Typ.)
Display Operating Mode	Transmissive mode, normally black
Surface Treatment	Hard coating(3H), Anti-glare treatment of the front polarizer

2. Absolute Maximum Ratings

The followings are maximum values which, if exceeded, may cause faulty operation or damage to the unit.

Table 1. ABSOLUTE MAXIMUM RATINGS

Parameter		Symbol	Value		Unit	Remark
			Min	Max		
Power Input Voltage	LCM	VLCD	-0.3	14.0	VDC	at 25 ± 2 °C
	Backlight inverter	VBL	21.6	27.0	VDC	
ON/OFF Control Voltage		VON/OFF	-0.30	5.25	VDC	
Brightness Control Voltage		VBr	0.0	3.3	VDC	
Operating Temperature		TOP	0	40	℃	Note 1
Storage Temperature		TST	-20	50	℃	
Operating Ambient Humidity		HOP	10	90	%RH	
Storage Humidity		HST	10	90	%RH	

Note : 1. Temperature and relative humidity range are shown in the figure below.
Wet bulb temperature should be 39 °C Max. and no condensation of water.

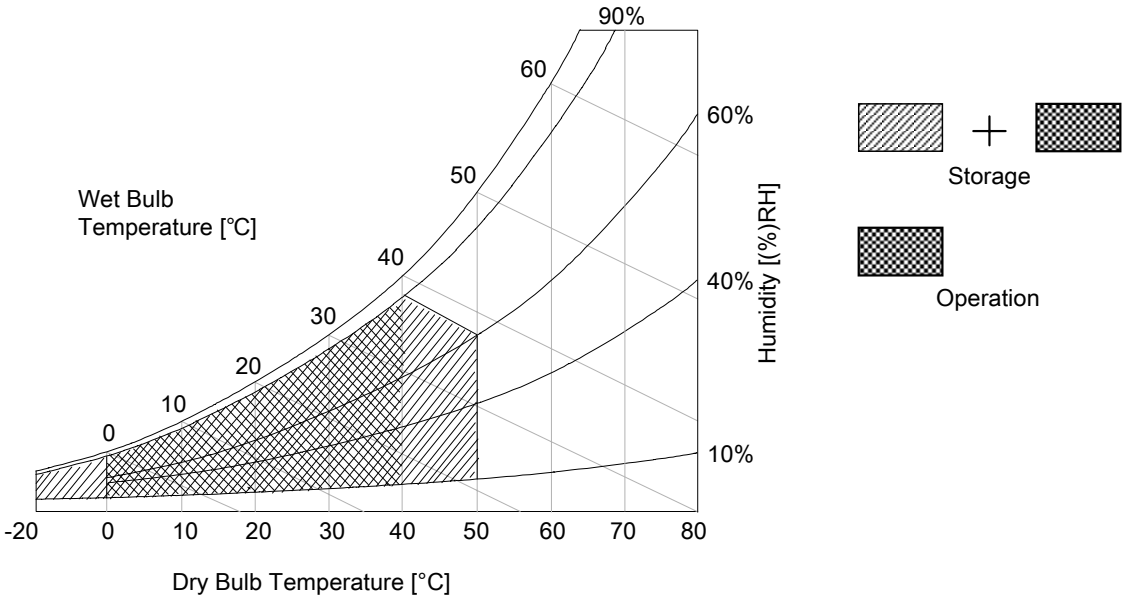

3. Electrical Specifications

3-1. Electrical Characteristics

It requires two power inputs. One is employed to power the LCD electronics and to drive the TFT array and liquid crystal. The other input power for the CCFL/Backlight is to power inverter.

Table 2_1. ELECTRICAL CHARACTERISTICS

Parameter	Symbol	Value			Unit	Note
		Min	Typ	Max		
MODULE :						
Power Input Voltage	V_{LCD}	11.4	12.0	12.6	V_{DC}	
Permissible Input Ripple Voltage	V_{RP}	-	-	200	mV_{P-P}	
Power Input Current	I_{LCD}	340	400	460	mA	1
		-	550	700	mA	2
Power Consumption	P_{LCD}	4.0	4.8	5.6	Watt	1
Rush current	I_{RUSH}	-	-	3.0	A	3

Note :
1. The specified current and power consumption are under the V_{LCD}=12.0V, 25 ± 2°C, f_V=60Hz condition whereas mosaic pattern(8 x 6) is displayed and f_V is the frame frequency.
2. The current is specified at the maximum current pattern.
3. The duration of rush current is about 2ms and rising time of power Input is 1ms(min.).

White : 255Gray
Black : 0Gray

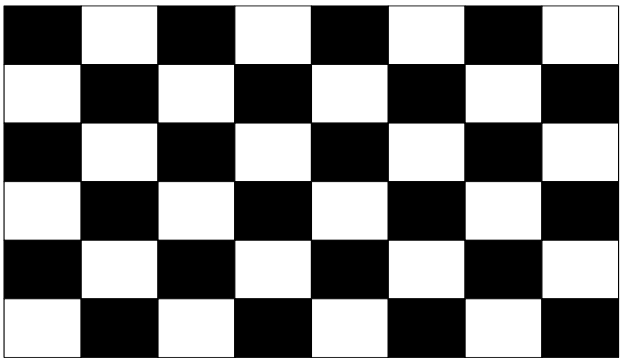

Mosaic Pattern(8 x 6)

Table 2_2. ELECTRICAL CHARACTERISTICS

Parameter			Symbol	Value			Unit	Note
				Min	Typ	Max		
Inverter :								
Power Input Voltage			V_{BL}	22.8	24.0	25.2	V_{DC}	1
Power Input Voltage Ripple				-0.2	-	0.2	Vp-p	
Power Input Current			I_{BL}	-	5.0	6.5	A	1
Power Consumption			P_{BL}	-	120	156	W	1
Input Voltage for Control System Signals	Brightness Adjust		V_{BR}	0		3.3	V_{DC}	2
	On/Off	On	V on	4.00	5.00	5.25	V_{DC}	
		Off	V off	-0.3	0.0	0.5	V_{DC}	
Lamp :								
Life Time				50,000			Hrs	3

Note :

1. Electrical characteristics are determined after the unit has been 'ON' and stable for approximately 120Min at 25±2°C and V_{BR} = 3.3V.
   The specified current and power consumption are under the typical supply Input voltage, 24.0V.
   It is total power consumption.
2. Brightness Control.
   This V_{BR} Voltage control brightness.

V_{BR} Voltage	Function
3.3V	Maximum Brightness (100%)
0V	Minimum Brightness.(15~25%)

3. The life time is determined as the time at which luminance of the lamp is 50% compared to that of initial value at the typical lamp current on condition of continuous operating at 25 ± 2°C.
   Specified value is when lamp is aligned horizontally.

3-2. Interface Connections

This LCD employs two kinds of interface connection, a 30-pin connector is used for the module electronics and two 12-pin Connectors are used for the integral backlight system.

3-2-1. LCD Module

- LCD Connector(CN1) : FI-X30SSL-HF (Manufactured by JAE) or Equivalent
- Mating Connector : FI-X30C2L (Manufactured by JAE) or Equivalent

Table 3. MODULE CONNECTOR(CN1) PIN CONFIGURATION

Pin No.	Symbol	Description	Note
1	VLCD	Power Supply +12.0V	
2	VLCD	Power Supply +12.0V	
3	VLCD	Power Supply +12.0V	
4	VLCD	Power Supply +12.0V	
5	GND	Ground	
6	GND	Ground	
7	GND	Ground	
8	GND	Ground	
9	Select	Select LVDS Data format	1
10	NC	NC	
11	GND	Ground	
12	RA-	LVDS Receiver Signal(-)	
13	RA+	LVDS Receiver Signal(+)	
14	GND	Ground	
15	RB-	LVDS Receiver Signal(-)	
16	RB+	LVDS Receiver Signal(+)	
17	GND	Ground	
18	RC-	LVDS Receiver Signal(-)	
19	RC+	LVDS Receiver Signal(+)	
20	GND	Ground	
21	RCLK-	LVDS Receiver Clock Signal(-)	
22	RCLK+	LVDS Receiver Clock Signal(+)	
23	GND	Ground	
24	RD-	LVDS Receiver Signal(-)	
25	RD+	LVDS Receiver Signal(+)	
26	GND	Ground	
27	NC	NC	
28	NC	NC	
29	GND	Ground	
30	NC(GND)	LCD test	2

Note: 1. If the pin no. 9 is Ground, Interface format is “LG”, and if the pin no. 9 is Vcc(3.3V), Interface format is “DISM”. See page 9 and 10.

2. The pin no. 30 is necessary for LCD test.
   When LVDS signals are abnormal operation more than 3-Vsync times and power 12V is supplied,
   ‘Open’ or ‘Vcc’ : LCD operate itself some test patterns.(AGP – Auto Generation Pattern)
   ‘Ground’ : LCD operate itself a black pattern. (NSB – No Signal Black)
   LPL recommend ‘Ground’ for NSB.
3. All GND (ground) pins should be connected together, which should be also connected to the LCD module’s metal frame.
4. All V_{LCD} (power input) pins should be connected together.
5. Input Levels of LVDS signals are based on the IEA 664 Standard.

Table 4. REQUIRED SIGNAL ASSIGNMENT FOR LVDS TRANSMITTER (Pin9="L" or "Open")

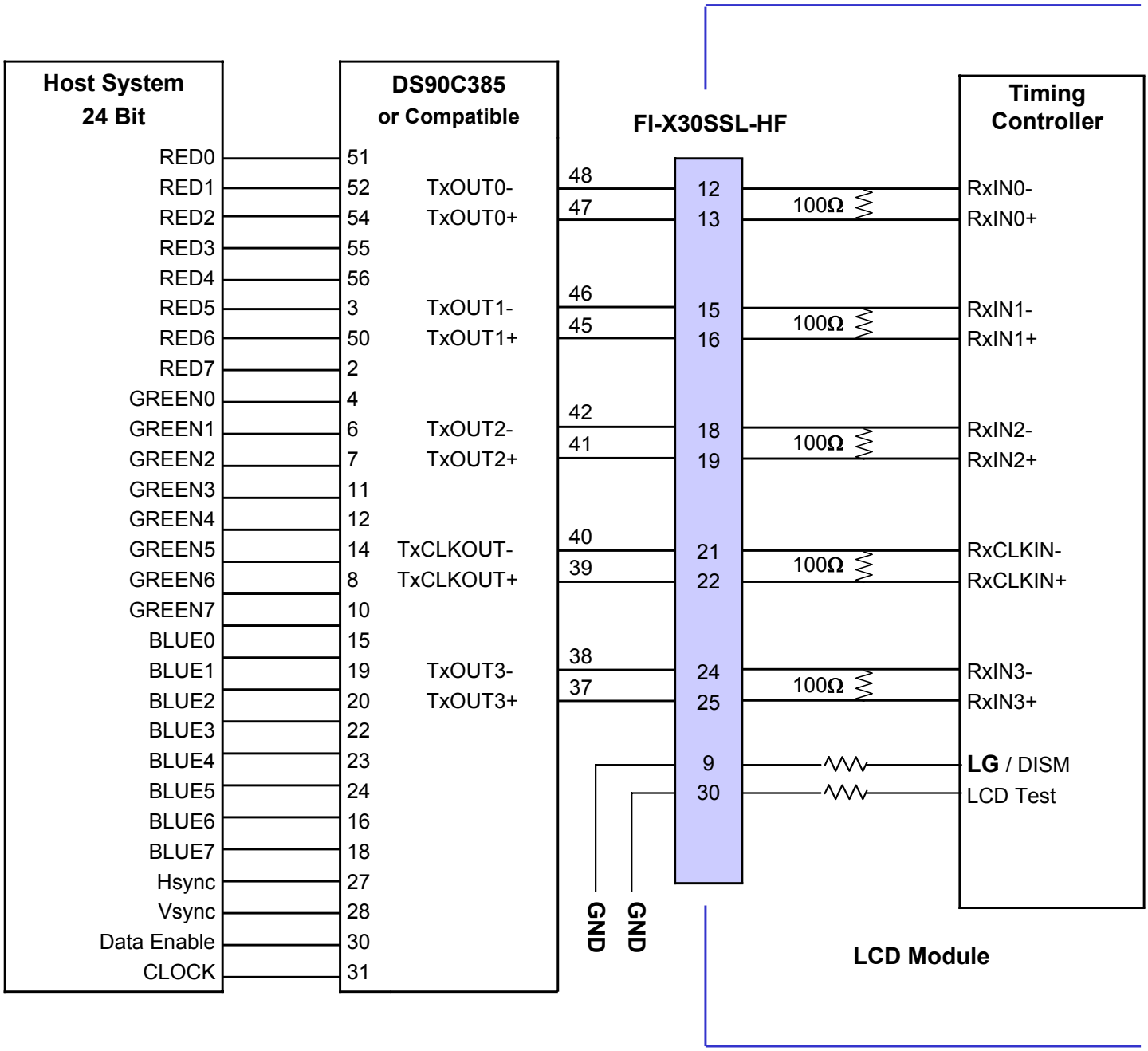

Note: 1. The LCD Module uses a 100 Ohm[Ω] resistor between positive and negative lines of each receiver input.
2. Refer to LVDS Transmitter Data Sheet for detail descriptions. (DS90C385 or Compatible)
3. '7' means MSB and '0' means LSB at R,G,B pixel data.

Table 5. REQUIRED SIGNAL ASSIGNMENT FOR LVDS TRANSMITTER (Pin9="H")

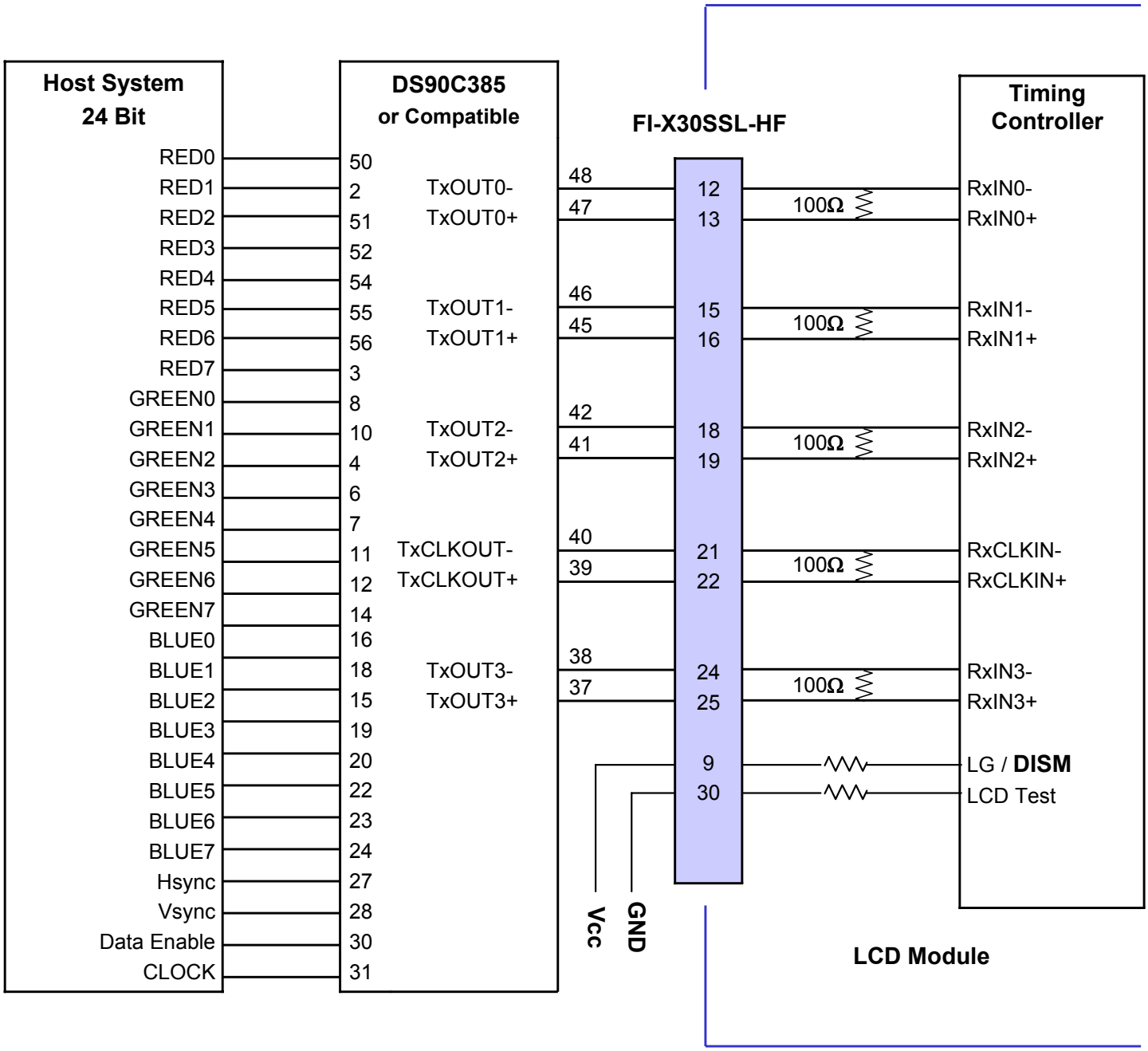

Note: 1. The LCD Module uses a 100 Ohm[Ω] resistor between positive and negative lines of each receiver input.
2. Refer to LVDS Transmitter Data Sheet for detail descriptions. (DS90C385 or Compatible)
3. '7' means MSB and '0' means LSB at R,G,B pixel data.

3-2-2. Backlight Inverter

- Inverter Connector : S12B-PH-SM3(manufactured by JST) or Equivalent
- Mating Connector : PHR-12 or Equivalent

Table 6. INVERTER CONNECTOR PIN CONFIGULATION

Pin No	Symbol	Description	Note
1	V_{BL}	Power Supply +24.0V	
2	V_{BL}	Power Supply +24.0V	
3	V_{BL}	Power Supply +24.0V	
4	V_{BL}	Power Supply +24.0V	
5	V_{BL}	Power Supply +24.0V	
6	GND	POWER GND	1
7	GND	POWER GND	
8	GND	POWER GND	
9	GND	POWER GND	
10	GND	POWER GND	
11	V_{BR}	0V ~ 3.3V	2
12	On/Off	0V ~ 5.0V	3

Note :

1. GND is connected to the LCD module's metal frame.



S12B-PH-SM3-TB
(JST : Japan Solderless Terminal Co.,Ltd.)

2. 0V : Minimum Brightness.
   3.3V : Maximum Brightness.

3. On : 4.0 ~ 5.25V
   Off : -0.3 ~ 0.5V

3-3. Signal Timing Specifications

This is the signal timing required at the input of LVDS Transmitter. All of the interface signal timing should be satisfied with the following specifications for it's proper operation.

Table 7. TIMMING TABLE

Item	Symbol		Min	Typ	Max	Unit	Remark
DCLK	Period	t_{CLK}	**12.2**	**13.8**	**14.7**	ns	
	Frequency	-	**68**	**72**	**80**	MHz	
Hsync	Period	t_{HP}	**1416**	**1528**	**1776**	t_{CLK}	
	Frequency	f_H	**45**	**47.4**	**50**	KHz	
	Width	t_{WH}	**8**	**32**	**-**	t_{CLK}	
Vsync	Period	t_{VP}	**775**	**790**	**1063**	t_{HP}	Note 1) PAL : 47~53Hz NTSC : 57~63Hz
	Frequency	f_V	**47**	**60**	**63**	Hz	
	Width	t_{WV}	**2**	**5**	**-**	t_{HP}	
DE (Data Enable)	Horizontal Valid	t_{HV}	**1366**	**1366**	**1366**	t_{CLK}	
	Horizontal Back Porch	t_{HBP}	**16**	**80**	**-**		
	Horizontal Front Porch	t_{HFP}	**24**	**48**	**-**		
	Horizontal Blank	-	**48**	**160**	t_{HP}- t_{HV}		
	Vertical Valid	t_{VV}	**768**	**768**	**768**	t_{HP}	
	Vertical Back Porch	t_{VBP}	**4**	**15**	-		
	Vertical Front Porch	t_{VFP}	**1**	**2**	-		
	Vertical Blank	-	**7**	**22**	t_{VP}- t_{VV}		

Note: Hsync period and Hsync Width should be even number times of t_{CLK}. If the value is odd number times of t_{CLK}, display control signal can be asynchronous. In order to operate this LCD module, Hsync, Vsync, and DE(Data Enable) signals should be used.

1. : The performance of the electro-optical characteristics may be influenced by variance of the vertical refresh rate.

2. Vsync and Hsync should be keep the above specification.

3. Hsync Period, Hsync Width and Horizontal Back Porch should be any times of character number(8).

3-4. Signal Timing Waveforms

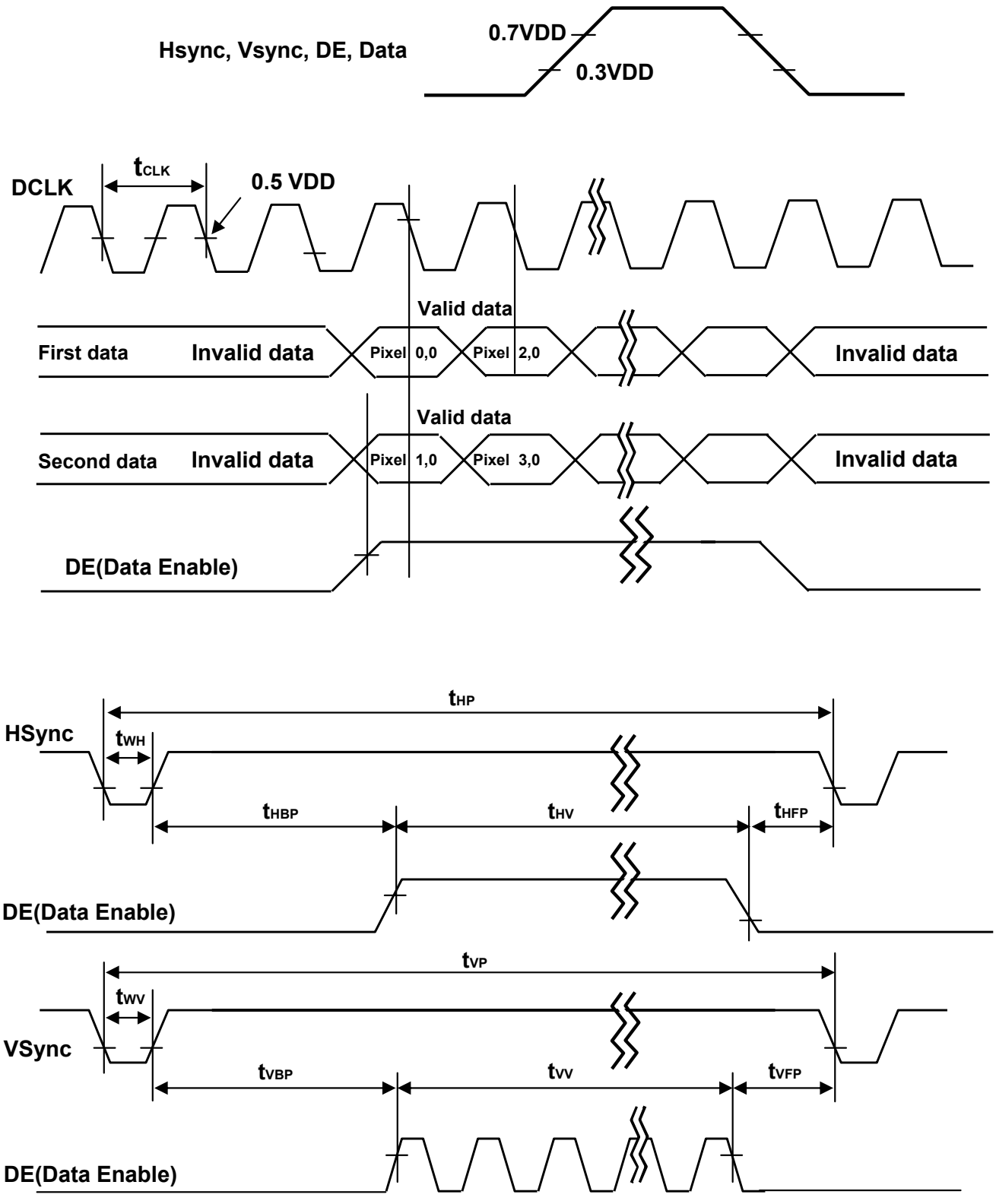

3-5. Color Data Reference

The brightness of each primary color(red,green,blue) is based on the 8-bit gray scale data input for the color the higher the binary input, the brighter the color. The table below provides a reference for color versus data input.

Table 8. COLOR DATA REFERENCE

Color		Input Color Data																							
		RED								GREEN								BLUE							
		MSB							LSB	MSB							LSB	MSB							LSB
		R7	R6	R5	R4	R3	R2	R1	R0	G7	G6	G5	G4	G3	G2	G1	G0	B7	B6	B5	B4	B3	B2	B1	B0
Basic Color	Black	0	0	0	0	0	0	0	0	0	0	0	0	0	0	0	0	0	0	0	0	0	0	0	0
	Red (255)	1	1	1	1	1	1	1	1	0	0	0	0	0	0	0	0	0	0	0	0	0	0	0	0
	Green (255)	0	0	0	0	0	0	0	0	1	1	1	1	1	1	1	1	0	0	0	0	0	0	0	0
	Blue (255)	0	0	0	0	0	0	0	0	0	0	0	0	0	0	0	0	1	1	1	1	1	1	1	1
	Cyan	0	0	0	0	0	0	0	0	1	1	1	1	1	1	1	1	1	1	1	1	1	1	1	1
	Magenta	1	1	1	1	1	1	1	1	0	0	0	0	0	0	0	0	1	1	1	1	1	1	1	1
	Yellow	1	1	1	1	1	1	1	1	1	1	1	1	1	1	1	1	0	0	0	0	0	0	0	0
	White	1	1	1	1	1	1	1	1	1	1	1	1	1	1	1	1	1	1	1	1	1	1	1	1
RED	RED (000) Dark	0	0	0	0	0	0	0	0	0	0	0	0	0	0	0	0	0	0	0	0	0	0	0	0
	RED (001)	0	0	0	0	0	0	0	1	0	0	0	0	0	0	0	0	0	0	0	0	0	0	0	0
	...					...								...								...			
	RED (254)	1	1	1	1	1	1	1	0	0	0	0	0	0	0	0	0	0	0	0	0	0	0	0	0
	RED (255)	1	1	1	1	1	1	1	1	0	0	0	0	0	0	0	0	0	0	0	0	0	0	0	0
GREEN	GREEN (000) Dark	0	0	0	0	0	0	0	0	0	0	0	0	0	0	0	0	0	0	0	0	0	0	0	0
	GREEN (001)	0	0	0	0	0	0	0	0	0	0	0	0	0	0	0	1	0	0	0	0	0	0	0	0
	...					...								...								...			
	GREEN (254)	0	0	0	0	0	0	0	0	1	1	1	1	1	1	1	0	0	0	0	0	0	0	0	0
	GREEN (255)	0	0	0	0	0	0	0	0	1	1	1	1	1	1	1	1	0	0	0	0	0	0	0	0
BLUE	BLUE (000) Dark	0	0	0	0	0	0	0	0	0	0	0	0	0	0	0	0	0	0	0	0	0	0	0	0
	BLUE (001)	0	0	0	0	0	0	0	0	0	0	0	0	0	0	0	0	0	0	0	0	0	0	0	1
	...					...								...								...			
	BLUE (254)	0	0	0	0	0	0	0	0	0	0	0	0	0	0	0	0	1	1	1	1	1	1	1	0
	BLUE (255)	0	0	0	0	0	0	0	0	0	0	0	0	0	0	0	0	1	1	1	1	1	1	1	1

3-6. Power Sequence

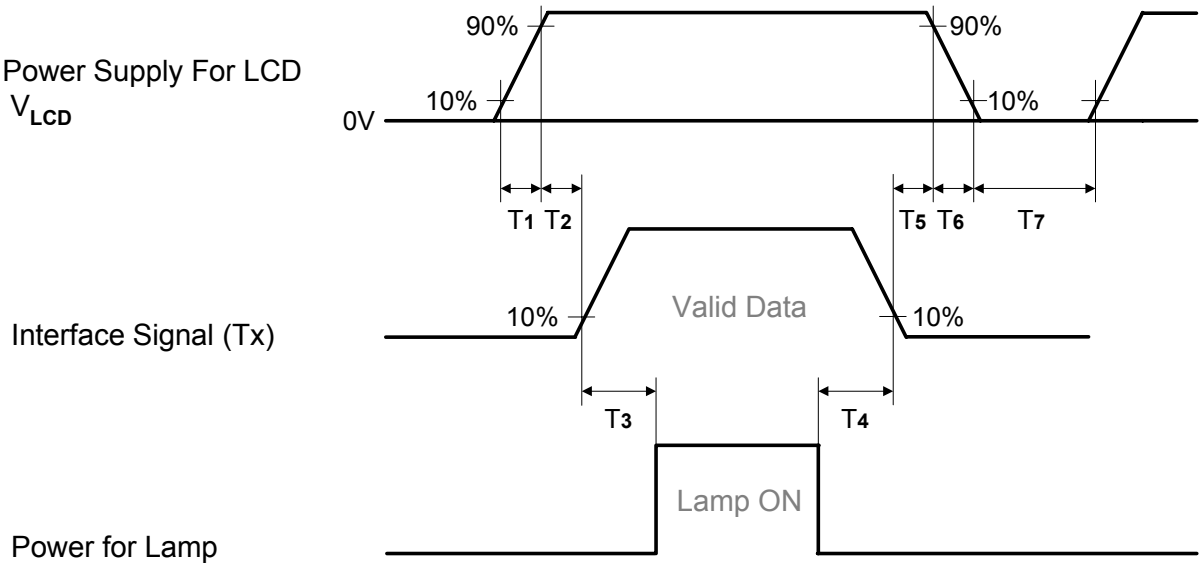

Table 9. POWER SEQUENCE

Parameter	Value			Unit
	Min	Typ	Max	
T1	0.5	-	10	ms
T2	0.5	-	50	ms
T3	200	-	-	ms
T4	200	-	-	ms
T5	0.5	-	50	ms
T6	-	-	100	ms
T7	2.0	-	-	s

Note : 1. Please avoid floating state of interface signal at invalid period.
2. When the interface signal is invalid, be sure to pull down the power supply V_{LCD} to 0V.

3-6-2. Power Sequence for Inverter

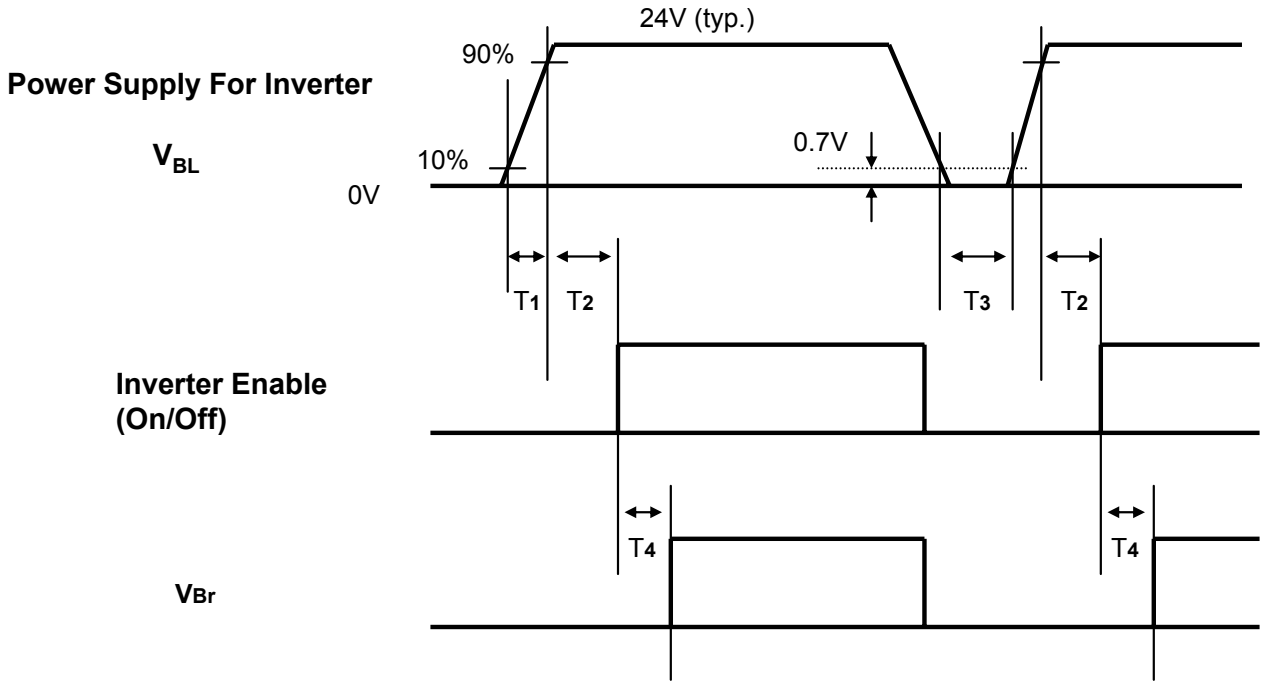

3-6-3. Deep condition for Inverter

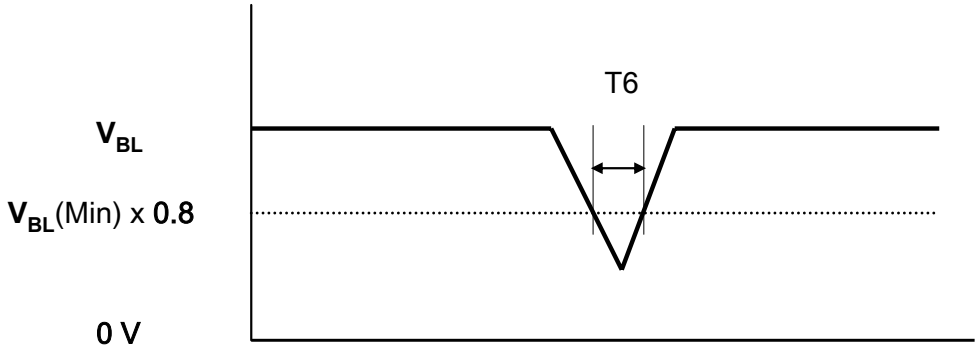

Table 10. POWER SEQUENCE FOR INVERTER

Parameter	Value			Unit	Remark
	Min	Typ	Max		
T1	20	-	-	ms	inverters connected condition
T2	500	-	-	ms	
T3	200	-	-	ms	
T4	0	-	-	ms	
T5	-	-	10	ms	V_{BL}(Min) x 0.8

4. Optical Specification

Optical characteristics are determined after the unit has been 'ON' for 30min in a dark environment at 25±2°C. The values specified are at an approximate distance 50cm from the LCD surface at a viewing angle of Φ and θ equal to 0 °.
It is presented additional information concerning the measurement equipment and method in FIG. 1.

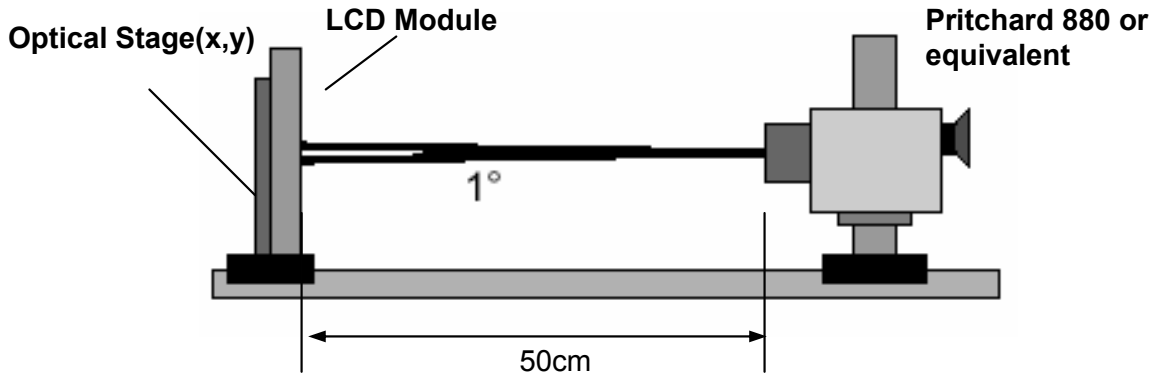

FIG. 1 Optical Characteristic Measurement Equipment and Method

Table 11. OPTICAL CHARACTERISTICS Ta= 25±2°C, V_{LCD}=12.0V, fv=60Hz, Dclk=72MHz, V_{BR} =3.3V

Parameter		Symbol	Value			Unit	Note
			Min	Typ	Max		
Contrast Ratio		CR	350	500			1
Surface Luminance, white		L_{WH}	400	500		cd/m^2	2
Luminance Variation		δ_{WHITE} 5P			1.3		3
Response Time	Rise Time	Tr_R	-	8	12	ms	4
	Decay Time	Tr_D	-	8	13		
Color Coordinates [CIE1931]	RED	Rx	Typ -0.03	0.640	Typ +0.03		
		Ry		0.341			
	GREEN	Gx		0.287			
		Gy		0.610			
	BLUE	Bx		0.146			
		By		0.069			
	WHITE	Wx		**0.285**			
		Wy		**0.293**			
Viewing Angle (CR>10)							
	x axis, right(ϕ=0°)	θr	85	88	-	degree	5
	x axis, left (ϕ=180°)	θl	85	88	-		
	y axis, up (ϕ=90°)	θu	85	88	-		
	y axis, down (ϕ=270°)	θd	85	88	-		
Gray Scale							6

Notes 1. Contrast Ratio(CR) is defined mathematically as :

$$\text{Contrast Ratio} = \frac{\text{Surface Luminance with all white pixels}}{\text{Surface Luminance with all black pixels}}$$

It is measured at the center point(1).

2. Surface luminance is luminance value at the center point across the LCD surface 50cm from the surface with all pixels displaying white.
For more information, see FIG 2.

3. The variation in surface luminance , δ WHITE is defined as :
δ WHITE(5P) = Maximum(L_{on1},L_{on2}, L_{on3}, ... , L_{on5}) / Minimum(L_{on1},L_{on2}, L_{on3}, ... , L_{on5})
Where L_{on1} to L_{on5} are the luminance with all pixels displaying white at 5 locations .
For more information, see FIG 2.

4. Response time is the time required for the display to transition from black to white (Rise Time, Tr_R) and from white to black (Decay Time, Tr_D).
For additional information, see FIG 3.

5. Viewing angle is the angle at which the contrast ratio is greater than 10. The angles are determined for the horizontal or x axis and the vertical or y axis with respect to the z axis which is normal to the LCD surface. For more information, see FIG 4.

6. Gray scale specification
Gamma Value is approximately 2.2.
For more information, see Table 12.

Table 12. GRAY SCALE SPECIFICATION

Gray Level	Luminance [%] (Typ)
L0	0.20
L15	0.31
L31	1.02
L47	2.57
L63	5.15
L79	8.64
L95	13.0
L111	18.1
L127	23.4
L143	30.0
L159	38.0
L175	46.7
L191	56.3
L207	66.8
L223	77.9
L239	90.8
L255	100

Measuring point for surface luminance & measuring point for luminance variation

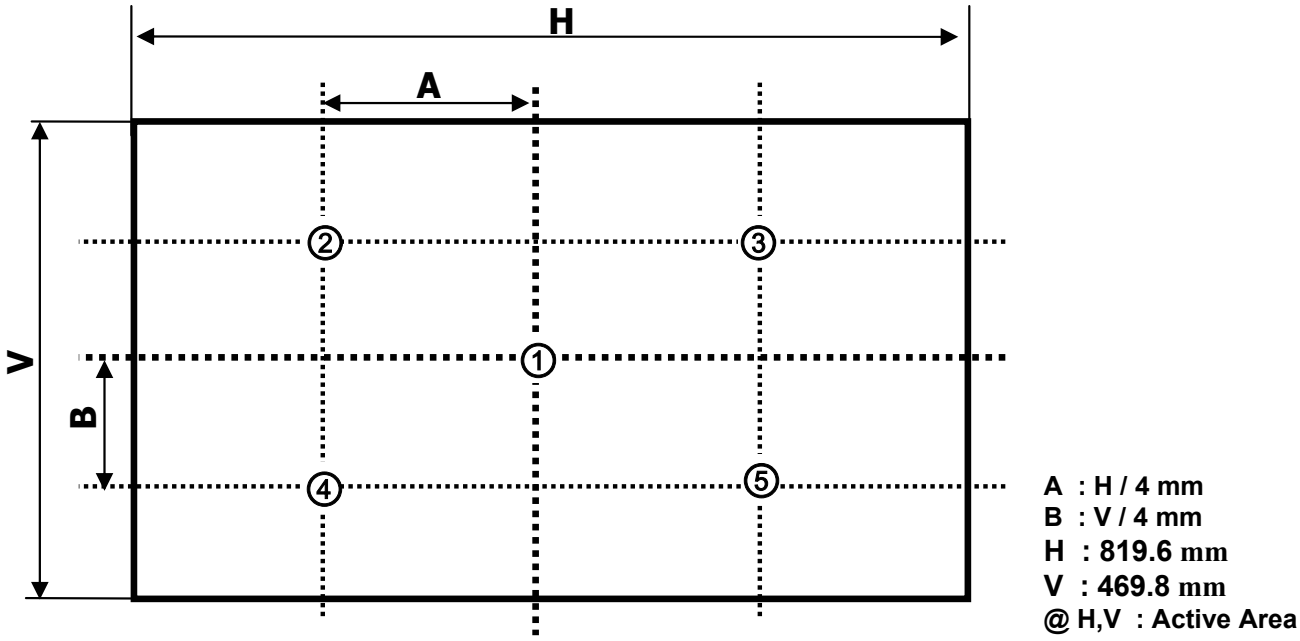

FIG. 2 Measure Point for Luminance

The response time is defined as the following figure and shall be measured by switching the input signal for Black to White and White to Black.

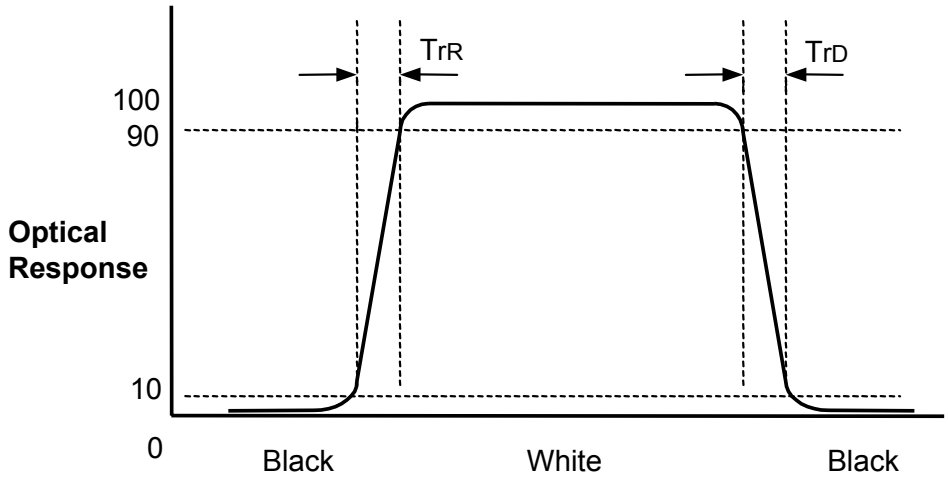

FIG. 3 Response Time

Dimension of viewing angle range

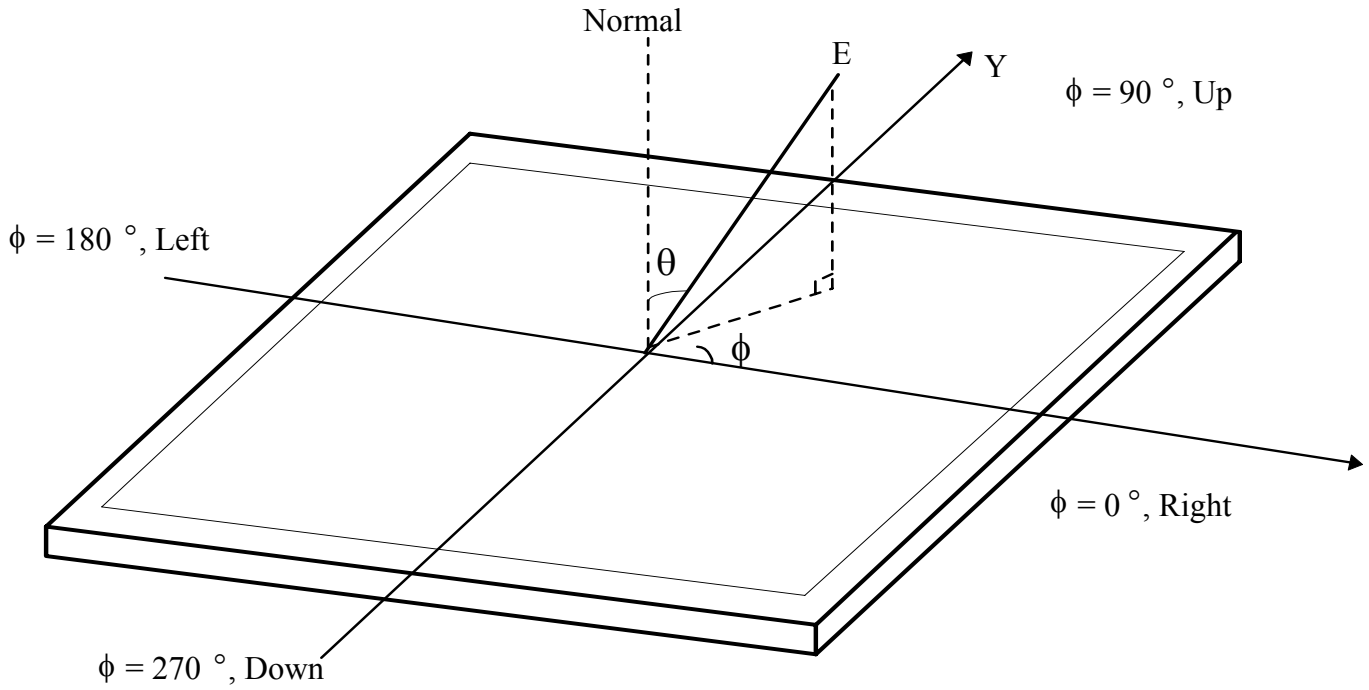

FIG. 4 Viewing angle

5. Mechanical Characteristics

The following items provide general mechanical characteristics. In addition the figures in the next page are detailed mechanical drawing of the LCD module.

Table 13. MECHANICAL CHARACTERISTICS

Outline Dimension	Horizontal	877.0 mm / 878.0mm(Inverter)
	Vertical	516.8 mm
	Depth	55.5 mm
Bezel Area	Horizontal	826.6mm
	Vertical	469.8mm
Active Display Area	Horizontal	819.6mm
	Vertical	460.8mm
Weight	11,500 (Typ.)/12,000(Max)	
Surface Treatment	Hard coating(3H) Anti-glare treatment of the front polarizer	

Note : Please refer to a mechanic drawing in terms of tolerance at the next page.

<FRONT VIEW>

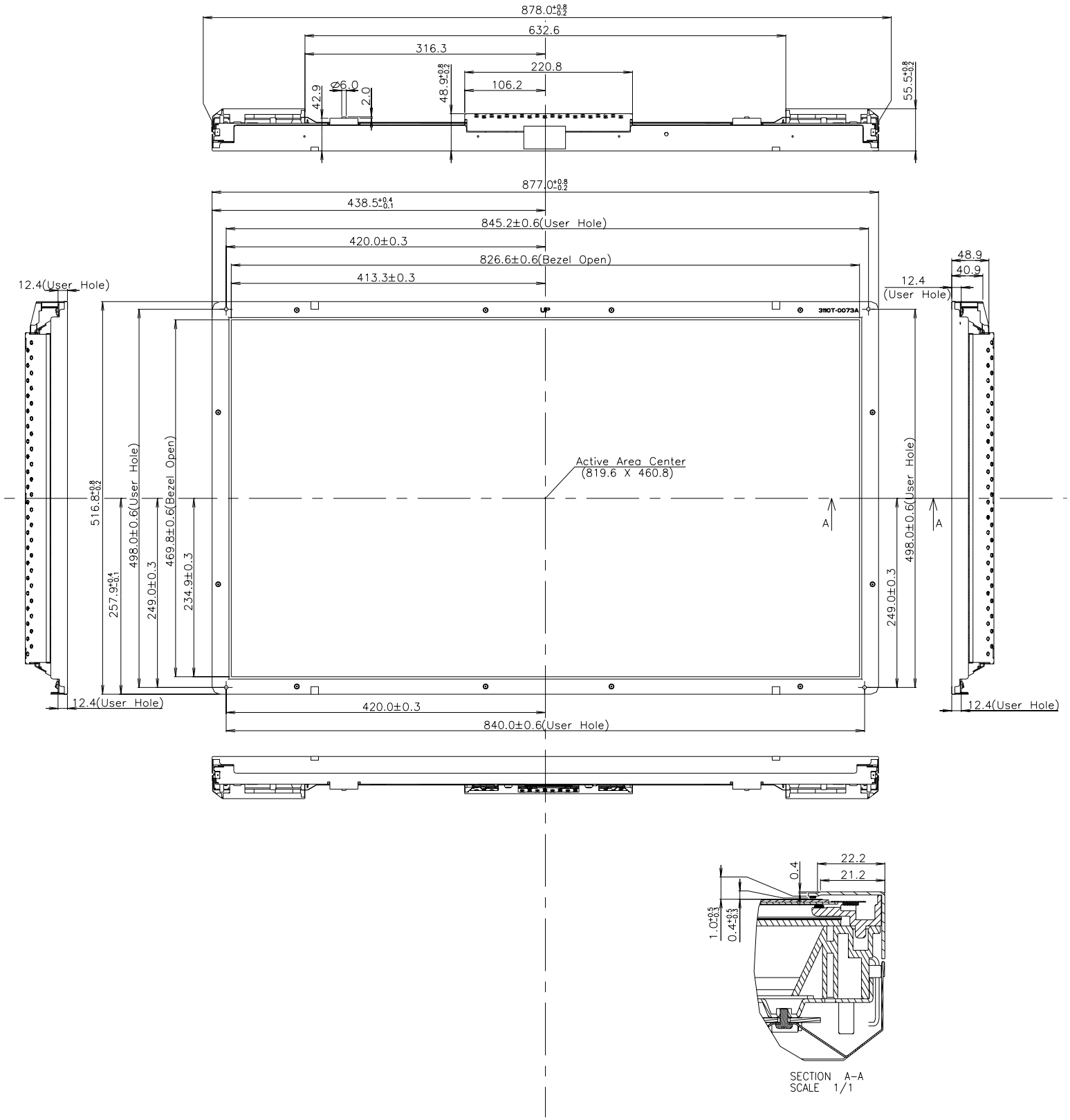
878.0
632.6
316.3
220.8
106.2
Ø6.0
42.9
2.0
48.9
55.5
877.0
438.5
845.2±0.6(User Hole)
420.0±0.3
826.6±0.6(Bezel Open)
413.3±0.3
48.9
40.9
12.4
(User Hole)
12.4(User Hole)
UP
3110T-0073A
Active Area Center
(819.6 X 460.8)
A
A
516.8
498.0±0.6(User Hole)
469.8±0.6(Bezel Open)
257.9
249.0±0.3
234.9±0.3
498.0±0.6(User Hole)
249.0±0.3
12.4(User Hole)
420.0±0.3
840.0±0.6(User Hole)
12.4(User Hole)
22.2
21.2
0.4
1.0
0.4
SECTION A-A
SCALE 1/1

<REAR VIEW>

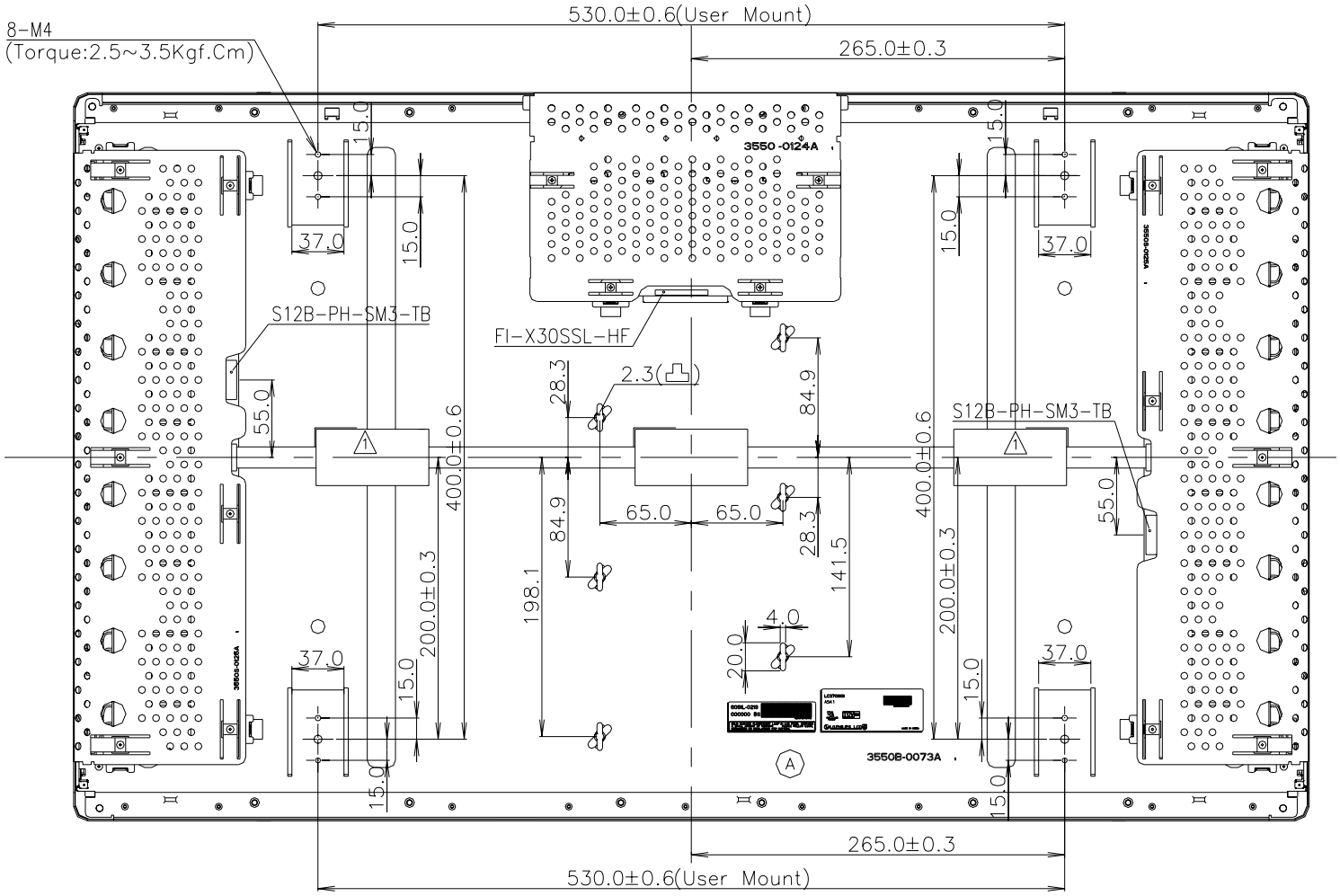

NOTES

1.Unspecified tolerances to be ±0.5.
2.This drawing is only preliminary data and can be changed without previous notice.
3.Tilt and partial disposition tolerance of display area as follow.
  1)Y-Direction : IA-BI<=1.5
  2)X-Direction : IC-DI<=1.5

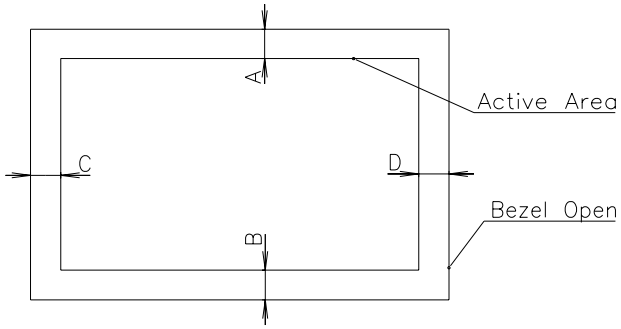

4.The same shape is same demension.

6. Reliability

Table 14. ENVIRONMENT TEST CONDITION

No.	Test Item	Condition
1	High temperature storage test	Ta= 50°C 240h
2	Low temperature storage test	Ta= -20°C 240h
3	High temperature operation test	Ta= 40°C 50%RH 240h
4	Low temperature operation test	Ta= 0°C 240h
5	Vibration test (non-operating)	Wave form : random Vibration level : 1.0G RMS Bandwidth : 10-500Hz Duration : X,Y,Z, 10 min One time each direction
6	Shock test (non-operating)	Shock level : 100G Waveform : half sine wave, 2ms Direction : ±X, ±Y, ±Z One time each direction
7	Humidity condition Operation	Ta= 40 °C, 90%RH
8	Altitude operating storage / shipment	0 - 14,000 feet(4267.2m) 0 - 40,000 feet(12192m)

7. International standards

7-1. Safety

a) UL 60950, Third Edition, Underwriters Laboratories, Inc., Dated Dec. 11, 2000.
Standard for Safety of Information Technology Equipment, Including Electrical Business Equipment.
b) CAN/CSA C22.2, No. 60950, Third Edition, Canadian Standards Association, Dec. 1, 2000.
Standard for Safety of Information Technology Equipment, Including Electrical Business Equipment.
c) EN 60950 : 2000, Third Edition
IEC 60950 : 1999, Third Edition
European Committee for Electrotechnical Standardization(CENELEC)
EUROPEAN STANDARD for Safety of Information Technology Equipment Including Electrical Business Equipment.

7-2. EMC

a) ANSI C63.4 “Methods of Measurement of Radio-Noise Emissions from Low-Voltage Electrical and Electrical Equipment in the Range of 9kHZ to 40GHz. “American National Standards Institute(ANSI), 1992
b) C.I.S.P.R “Limits and Methods of Measurement of Radio Interface Characteristics of Information Technology Equipment.“ International Special Committee on Radio Interference.
c) EN 55022 “Limits and Methods of Measurement of Radio Interface Characteristics of Information Technology Equipment.“ European Committee for Electrotechnical Standardization.(CENELEC), 1998
(Including A1: 2000)

8. Packing

8-1. Designation of Lot Mark

a) Lot Mark

A	B	C	D	E	F	G	H	I	J	K	L	M

A,B,C : SIZE(INCH)
D : YEAR
E : MONTH
F : PANEL CODE
G : FACTORY CODE
H : ASSEMBLY CODE
I,J,K,L,M : SERIAL NO.

Note

1. YEAR

Year	97	98	99	2000	2001	2002	2003	2004	2005	2006	2007
Mark	7	8	9	0	1	2	3	4	5	6	7

2. MONTH

Month	Jan	Feb	Mar	Apr	May	Jun	Jul	Aug	Sep	Oct	Nov	Dec
Mark	1	2	4	4	5	6	7	8	9	A	B	C

3. PANEL CODE

Panel Code	P1 Factory	P2 Factory	P3 Factory	P4 Factory	P5 Factory	Hydis Panel
Mark	1	2	3	4	5	H

4. FACTORY CODE

Factory Code	LPL Gumi	LPL Nanjing	Hee Sung
Mark	K	C	D

5. SERIAL NO.

Year	1 ~ 99999	100000 ~
Mark	00001 ~ 99999	A0001 ~ A9999, ... , Z9999

b) Location of Lot Mark

Serial NO. is printed on the label. The label is attached to the backside of the LCD module.
This is subject to change without prior notice.

8-2. Packing Form

a) Package quantity in one box : 3 pcs

b) Box Size : 1040mm X 442mm X 645mm

9. Precautions

Please pay attention to the followings when you use this TFT LCD module.

9-1. Mounting Precautions

(1) You must mount a module using holes arranged in four corners or four sides.
(2) You should consider the mounting structure so that uneven force (ex. Twisted stress) is not applied to the module. And the case on which a module is mounted should have sufficient strength so that external force is not transmitted directly to the module.
(3) Please attach the surface transparent protective plate to the surface in order to protect the polarizer. Transparent protective plate should have sufficient strength in order to the resist external force.
(4) You should adopt radiation structure to satisfy the temperature specification.
(5) Acetic acid type and chlorine type materials for the cover case are not desirable because the former generates corrosive gas of attacking the polarizer at high temperature and the latter causes circuit break by electro-chemical reaction.
(6) Do not touch, push or rub the exposed polarizers with glass, tweezers or anything harder than HB pencil lead. And please do not rub with dust clothes with chemical treatment.
Do not touch the surface of polarizer for bare hand or greasy cloth.(Some cosmetics are detrimental to the polarizer.)
(7) When the surface becomes dusty, please wipe gently with absorbent cotton or other soft materials like chamois soaks with petroleum benzine. Normal-hexane is recommended for cleaning the adhesives used to attach front / rear polarizers. Do not use acetone, toluene and alcohol because they cause chemical damage to the polarizer.
(8) Wipe off saliva or water drops as soon as possible. Their long time contact with polarizer causes deformations and color fading.
(9) Do not open the case because inside circuits do not have sufficient strength.

9-2. Operating Precautions

(1) The spike noise causes the mis-operation of circuits. It should be lower than following voltage :
V=±200mV(Over and under shoot voltage)
(2) Response time depends on the temperature.(In lower temperature, it becomes longer.)
(3) Brightness depends on the temperature. (In lower temperature, it becomes lower.)
And in lower temperature, response time(required time that brightness is stable after turned on) becomes longer.
(4) Be careful for condensation at sudden temperature change. Condensation makes damage to polarizer or electrical contacted parts. And after fading condensation, smear or spot will occur.
(5) When fixed patterns are displayed for a long time, remnant image is likely to occur.
(6) Module has high frequency circuits. Sufficient suppression to the electromagnetic interference shall be done by system manufacturers. Grounding and shielding methods may be important to minimized the interference.
(7) Please do not give any mechanical and/or acoustical impact to LCM. Otherwise, LCM can't be operated its full characteristics perfectly.
(8) A screw which is fastened up the steels should be a machine screw.
(if not, it causes metallic foreign material and deal LCM a fatal blow)
(9) Please do not set LCD on its edge.

9-3. Electrostatic Discharge Control

Since a module is composed of electronic circuits, it is not strong to electrostatic discharge. Make certain that treatment persons are connected to ground through wrist band etc. And don't touch interface pin directly.

9-4. Precautions for Strong Light Exposure

Strong light exposure causes degradation of polarizer and color filter.

9-5. Storage

When storing modules as spares for a long time, the following precautions are necessary.

(1) Store them in a dark place. Do not expose the module to sunlight or fluorescent light. Keep the temperature between 5°C and 35°C at normal humidity.
(2) The polarizer surface should not come in contact with any other object.
It is recommended that they be stored in the container in which they were shipped.

9-6. Handling Precautions for Protection Film

(1) The protection film is attached to the bezel with a small masking tape.
When the protection film is peeled off, static electricity is generated between the film and polarizer.
This should be peeled off slowly and carefully by people who are electrically grounded and with well ion-blown equipment or in such a condition, etc.
(2) When the module with protection film attached is stored for a long time, sometimes there remains a very small amount of glue still on the bezel after the protection film is peeled off.
(3) You can remove the glue easily. When the glue remains on the bezel surface or its vestige is recognized, please wipe them off with absorbent cotton waste or other soft material like chamois soaked with normal-hexane.