LC01-6
Low Capacitance TVS for High-Speed Telecommunication Systems

PROTECTION PRODUCTS

Description

The LC01-6 transient voltage suppressor is designed to protect components which are connected to high speed telecommunication lines from voltage surges caused by **lightning**, electrostatic discharge **(ESD)**, and electrical fast transients **(EFT)**.

TVS diodes are ideal for use as board level protection of sensitive semiconductor components. The LC01-6 is designed for metallic mode, secondary line side protection in digital line card applications. It features solid-state silicon-avalanche technology for unmatched transient protection without device degradation. The LC01-6 combines TVS diodes with low capacitance compensation diodes to provide an integrated, low capacitance protection solution. Additional features include sub-nanosecond response time, a low operating voltage of 6 volts, and low clamping voltage.

The LC01-6 is suitable for use on T1/E1 and xDSL interfaces in equipment such as base stations, routers, and channel service units. The LC01-6 meets the long-haul (outer-building) transient immunity requirements of **Bellcore 1089**, **FCC Part 68** (Type A and B surges), and **IEC 61000-4-5**.

Features

- 1500 watts peak pulse power (tp = 10/1000µs)
- Transient protection for high speed data lines to
  IEC 61000-4-2 (ESD) 15kV (air), 8kV (contact)
  IEC 61000-4-5 (Lightning) 95A (8/20µs)
  Bellcore 1089 (Outer-Building),
  100A (10/1000µs), 500A (2/10µs)
  FCC Part 68 200A (10/160µs)
  ITU K.20 200A (5/310µs)
- Differential protection for one Tip & Ring line pair
- Low capacitance for high speed interfaces
- Low operating & clamping voltage
- Integrated structure saves board space and increases reliability
- Solid-state silicon-avalanche technology

Mechanical Characteristics

- JEDEC SO-16W package
- UL 497B listed
- Molding compound flammability rating: UL 94V-0
- Marking : Part number, date code, logo
- Packaging : Tube or Tape and Reel per EIA 481

Applications

- T1/E1 Line Cards
- Base Stations
- WAN Interfaces
- xDSL Interfaces
- CSU/DSU Equipment

Circuit Diagram

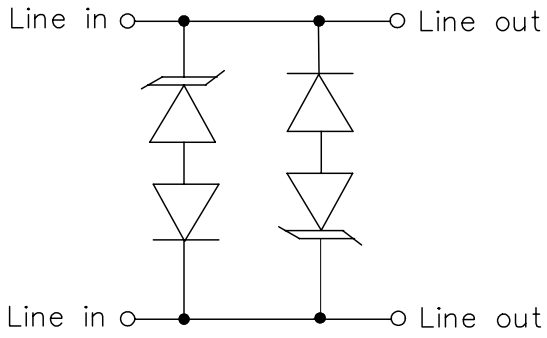

Schematic & PIN Configuration

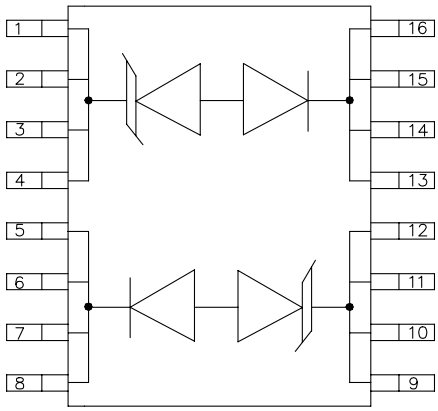

SO-16W (Top View)

Absolute Maximum Rating

Rating	Symbol	Value	Units
Peak Pulse Power (tp = 10/1000µs)	P_{pk}	1500	Watts
Peak Pulse Current (tp = 10/1000µs)	I_{PP}	100	A
Peak Pulse Current (tp = 10/160µs)	I_{PP}	200	A
Thermal Resistance Junction to Case	θ_{JC}	30	°C/W
Thermal Resistance Junction to Ambient	θ_{JA}	95	°C/W
Lead Soldering Temperature	T_L	260 (10 sec.)	°C
Operating Temperature	T_J	-55 to +125	°C
Storage Temperature	T_{STG}	-55 to +150	°C

Electrical Characteristics

LC01-6

Parameter	Symbol	Conditions	Minimum	Typical	Maximum	Units
Reverse Stand-Off Voltage	V_{RWM}				6	V
Reverse Breakdown Voltage	V_{BR}	I_t = 1mA	8			V
Reverse Leakage Current	I_R	V_{RWM} = 6V, T=25°C			25	µA
Clamping Voltage	V_C	I_{PP} = 100A tp = 10/1000µs			15	V
Clamping Voltage	V_C	I_{PP} = 200A tp = 10/160µs			16	V
Temperature Coefficient of Breakdown Voltage	αT_{VBR}			3		mV/°C
Junction Capacitance	C_j	V_R = 0V, f = 1MHz			50	pF

Typical Characteristics

Non-Repetitive Peak Pulse Power vs. Pulse Time

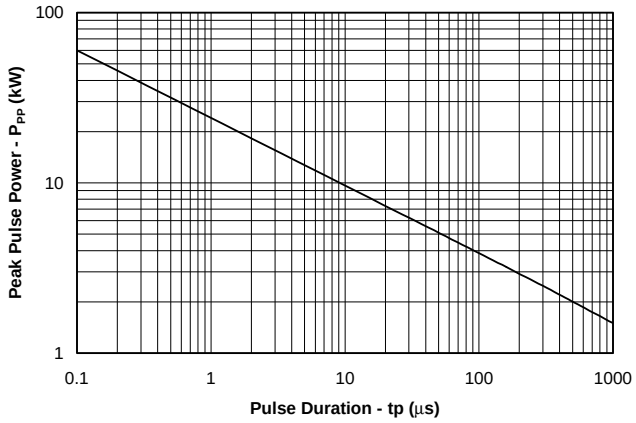

Power Derating Curve

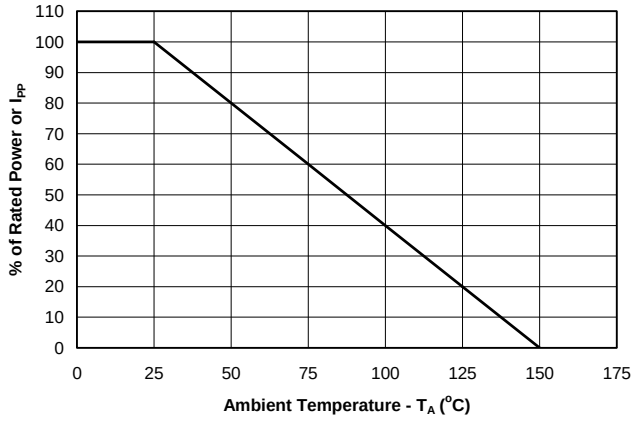

Pulse Waveform

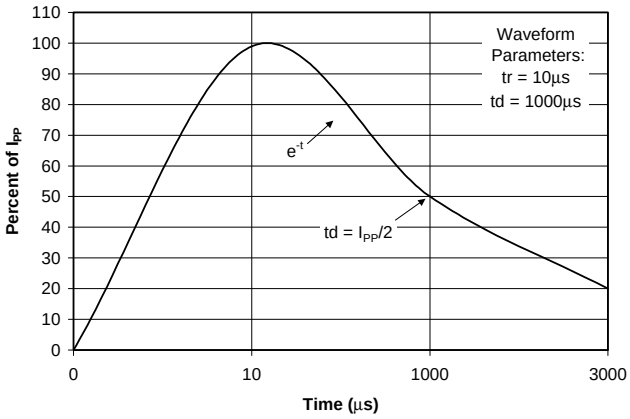

Clamping Voltage vs. Peak Pulse Current

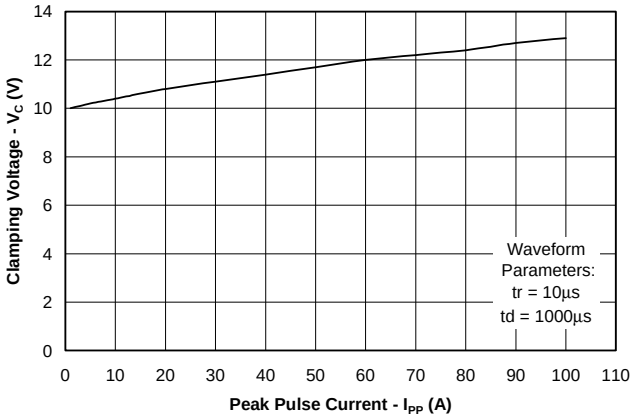

Capacitance vs. Reverse Voltage

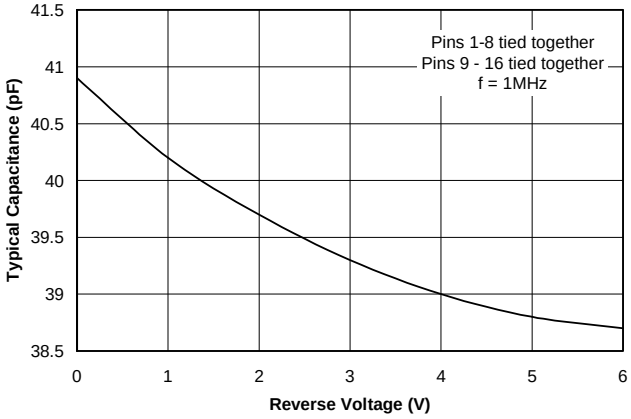

AC Power Dissipation

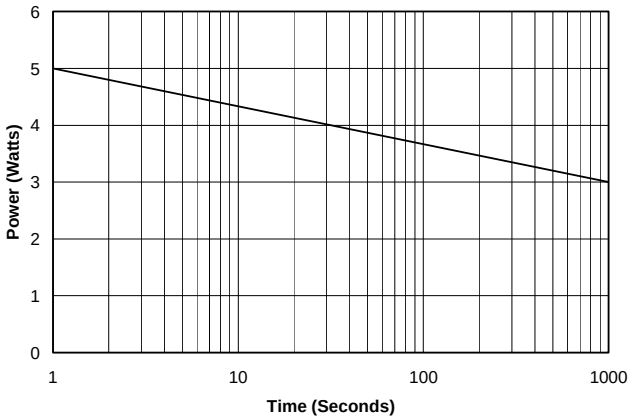

Applications Information

Device Connection Options for Protection of High-Speed Data Lines

The LC01-6 is designed to protect high-speed data lines from transient over-voltages which result from lightning and ESD. The device is designed to protect one line pair in differential (Line-to-Line) mode. Pins 1-8 are connected to line 1 and pins 9-16 are connected to line 2 as shown. All pins should be connected for best results.

T1/E1 Linecard Protection

A typical long-haul T1/E1 linecard protection circuit is shown below. The LC01-6 is connected between Tip & Ring on the transmit and receive line pairs. It provides protection to metallic (line-to-line) lightning surges per Bellcore 1089 and FCC Part 68. Depending on the application, a high voltage crowbar device (not shown) such as a gas discharge tube (GDT) or TVS Thyristor may be used to suppress common mode (line-to-ground) surges. To complete the protection circuit, the SRDA05-4 (or SRDA3.3-4 for 3.3V supplies) is employed as the secondary IC side protection element. This device helps prevent the transceiver from latching up by providing fine clamping of transients that are coupled through the transformer. Positive temperature coefficient (PTC) resistors or fuses are also required for AC power cross protection. For further information, reference Semtech application note AN97-10.

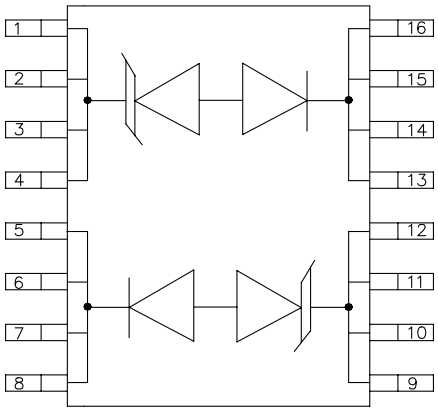

Figure 1 - Schematic and Pin Configuration

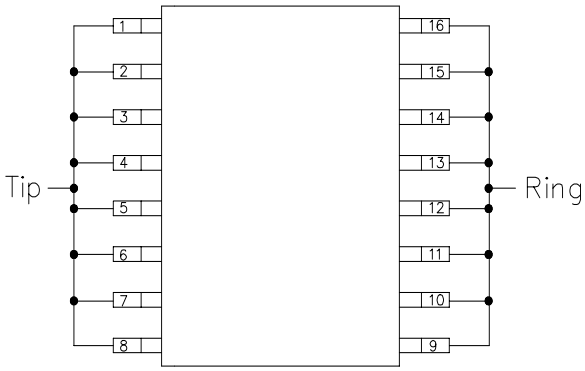

Figure 2 - Connection for Differential Protection (Line-to-Line)

Typical Applications

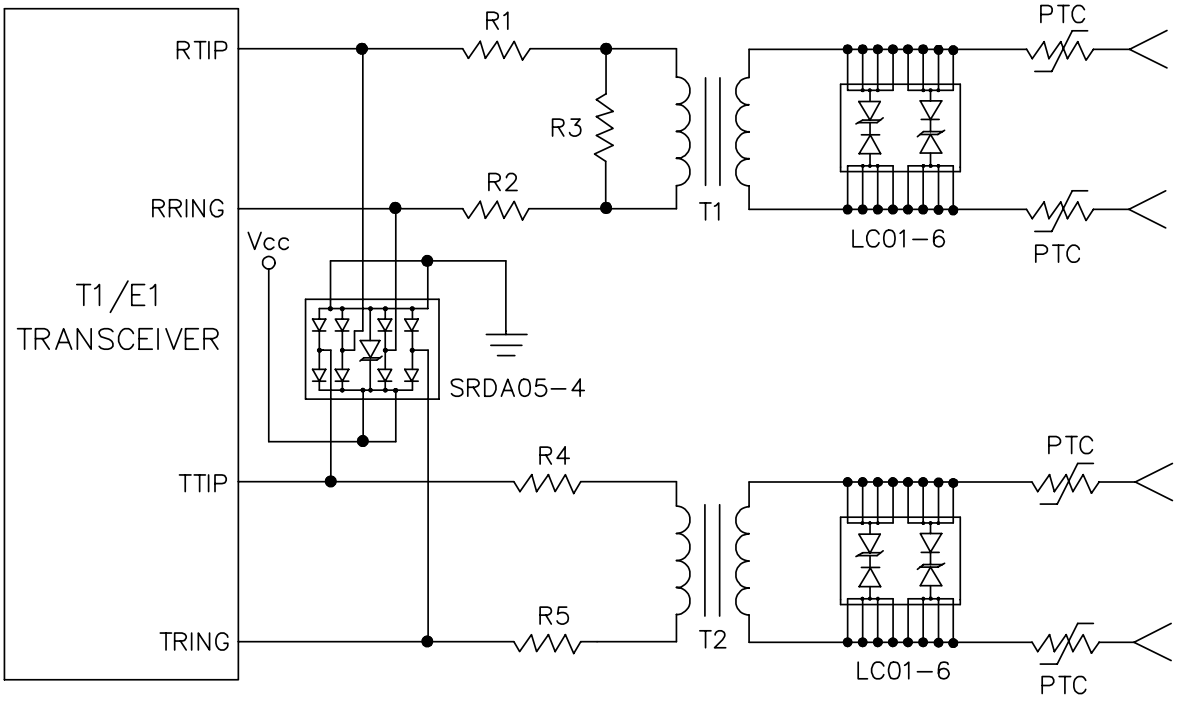

T1 Line Card Protection (Long-Haul Applications)

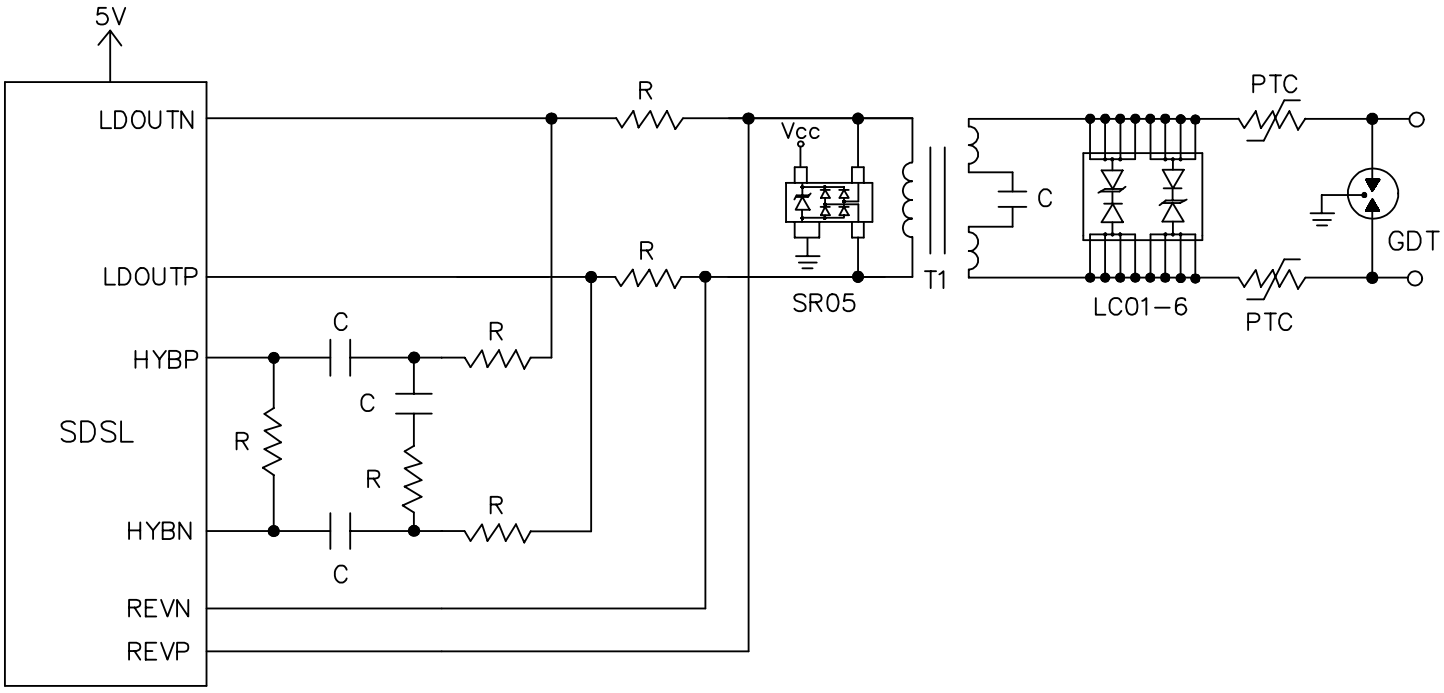

SDSL Protection

PROTECTION PRODUCTS

Outline Drawing - SO-16W

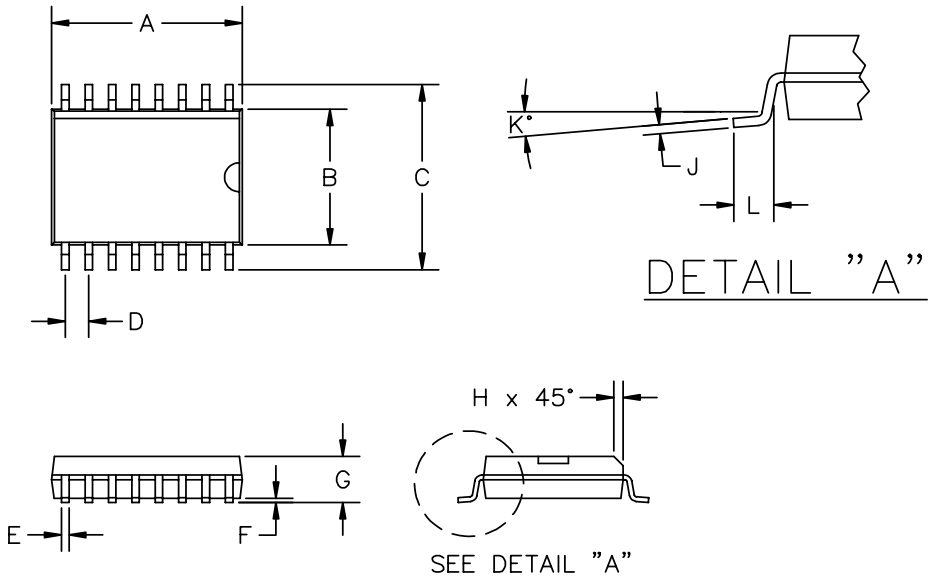

DIMENSIONS (1)					
DIM	MM		INCHES		NOTE
	MIN	MAX	MIN	MAX	
A	10.11	10.31	.3985	.4141	
B	7.40	7.60	.2914	.2992	(2)
C	10.00	10.64	.394	.419	(2)
D	1.27 BSC		.050 BSC		
E	.33	.46	.013	.020	
F	.10	.30	.004	.118	
G	2.35	2.64	.0926	.1043	
H	0.25	0.74	.010	.029	
J	.23	.32	.0091	.0125	
K	0°	8°	0°	8°	
L	.41	1.27	.016	.050	

(2) DIMENSIONS A AND B DO NOT INCLUDE MOLD PROTUSIONS
(1) CONTROLLING DIMENSION : INCH

Land Pattern - SO-16W

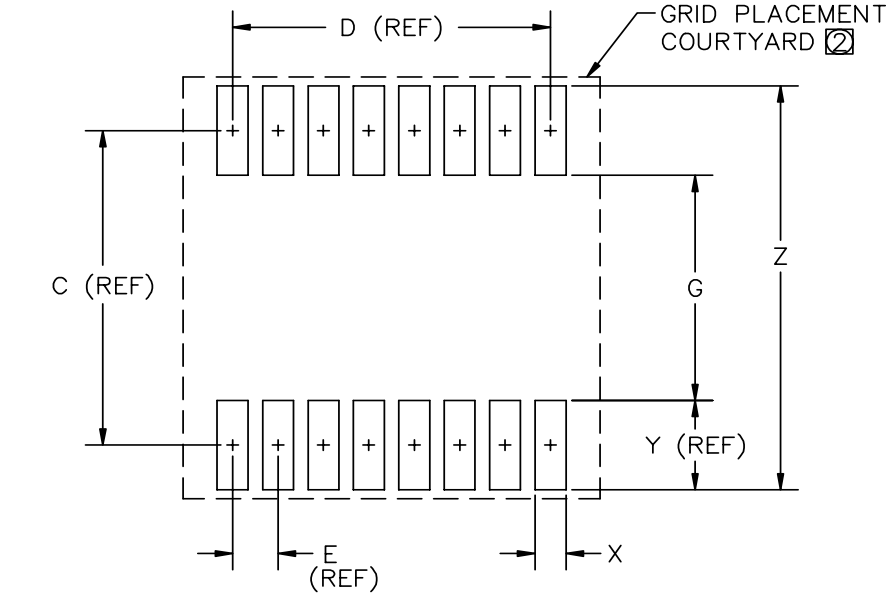

DIMENSIONS (1)					
DIM	INCHES		MM		NOTE
	MIN	MAX	MIN	MAX	
C	–	.36	–	9.20	–
D	–	.35	–	8.89	–
E	–	.05	–	1.27	–
G	.25	.27	6.60	6.80	–
X	.02	.03	.60	.80	–
Y	–	.10	–	2.60	–
Z	.45	.48	11.60	11.80	–

(2) GRID PLACEMENT COURTYARD IS 22 x 24 ELEMENTS (11 mm X 12 mm) IN ACCORDANCE WITH THE INTERNATIONAL GRID DETAILED IN IEC PUBLICATION 97.

(1) CONTROLLING DIMENSION: MILLIMETERS

Ordering Information

Part Number	Working Voltage	Qty per Reel	Reel Size
LC01-6.TD	6V	1000	13 Inch

Note:
(1) No suffix indicates tube pack.

Contact Information

Semtech Corporation
Protection Products Division
652 Mitchell Rd., Newbury Park, CA 91320
Phone: (805)498-2111 FAX (805)498-3804