2x5 Small Form Factor 1310nm Transceiver for ESCON, Fast Ethernet, ATM, SONET OC-3/SDH STM-1



FEATURES

- **Compliant with SFF Transceiver MSA specification**
- **Single + 3.3V Power Supply and TTL Logic Interface**
- **1310nm Multi Mode Transceiver**
- **Laser Class 1 Product which comply with the requirements of IEC 60825-1 and IEC 60825-2**
- **Duplex LC Connector interface**
- **RoHS Compliant per Directive 2002/95/EC**

Description

The LC-200A4H1RM is high performance, cost effective optical transceiver intended for 200Mbps. It is designed to provide SONET/SDH compliant link at 200Mbps for both short and intermediate reach links.

The LC-200A4H1RM transceivers provide with the LC receptacle that is compatible with the industry standard LC connector.

The post-amplifier of the LC-200A4H1RM also includes a Signal Detect circuit that provides a TTL logic-high output when an unusable optical signal level is detected.

The LC-200A4H1RM transceiver is a Class 1 eye safety product. The optical power levels, under normal operation, are at eye safe level.

Applications

- Switch to Switch interface
- Switched backplane applications
- File server interface

Performance

- Data Link up to 2km in 62.5/125um Multi Mode Fiber

Absolute Maximum Ratings

Parameter	Symbol	Min.	Typ.	Max.	Unit	Note
Storage Temperature	Ts	-40		85	ºC	
Lead Soldering Temperature	TSOLD			260	ºC	
Lead Soldering Time	tSOLD			10	Sec.	
Supply Voltage	VCC	0		5	V	

Recommended Operating Conditions

Parameter	Symbol	Min.	Typ.	Max.	Unit	Note
Ambient Operating Temperature	TA	0		70	ºC	1
Supply Voltage	VCC	3.135		3.465	V	

Note 1: See order information

Electrical Characteristics

(V_{CC}=3.135V to 3.465V)

Parameter	Symbol	Min.	Typ.	Max.	Unit	Note
Total Supply Current	ICCT			300	mA	
Transmitter Data input voltage-Low	V_{IL}- V_{CC}	-1.810		-1.475	V	
Transmitter Data input voltage-High	V_{IH}- V_{CC}	-1.165		-0.880	V	
Receiver Data output voltage-Low	V_{OL}-V_{CC}	-1.950		-1.620	V	
Receiver Data output voltage-High	V_{OH}-V_{CC}	-1.045		-0.740	V	
SD Output Voltage-Low	V_{SDH}-V_{CC}	0		0.8	V	
SD Output Voltage-High	V_{SDL}-V_{CC}	2		Vcc+0.3	V	

Optical Characteristics

(V_{CC}=3.135V to 3.465V, Data Rate=200Mb/sec, PRBS=2^{23}-1 NRZ, 62.5/125um MMF)

Parameter	Symbol	Min.	Typ.	Max.	Unit	Note
Transmitter						
Output Optical Power (Avg.)	P_O	-20		-14	dBm	
Optical Extinction Ratio		9			dB	
Center Wavelength	λ_C	1260	1310	1360	nm	
Spectral Width	σ			200	nm	
Duty Cycle Distortion	DCD			0.6	ns	
Data Dependent Jitter	DDJ			1.0	ns	
Optical risetime/falltime	t_r/t_f			3	ns	1
Output Eye	Compliant with Bellcore TR-NWT-000253 and ITU recommendation G.957					
Receiver						
Sensitivity (Avg.)	P_{IN}			-31	dBm	2
Input Optical Wavelength	λ	1100		1600	nm	
Signal Detect-Asserted (Avg.)	P_A			-31	dBm	
Signal Detect-De-asserted (Avg.)	P_D	-48			dBm	
Signal Detect-Hysteresis	P_A-P_D	0.5			dB	
Overload	P_O	-14			dBm	

Notes:

1. These are 10%~90% values
2. The sensitivity is provided at a BER of 1×10^{-10} or better with an input signal consisting of 200Mb/s, 2^{23}-1 PRBS.

Pin Definition：

PIN (2X5)	Symbol	Functional description
1	GND	Receiver Signal Ground
2	RXV_{CC}	Receiver Power Supply
3	SD	Signal Detect (LVTTL)
4	RD (-)	Receiver Data Out Bar (LVPECL)
5	RD (+)	Receiver Data Out (LVPECL)
6	TXV_{CC}	Transmitter Power Supply
7	GND	Transmitter Signal Ground
8	Disable	Transmitter Disable (LVTTL)
9	TD (+)	Transmitter Data In (LVPECL)
10	TD (-)	Transmitter Data In Bar (LVPECL)

Pin Drawing

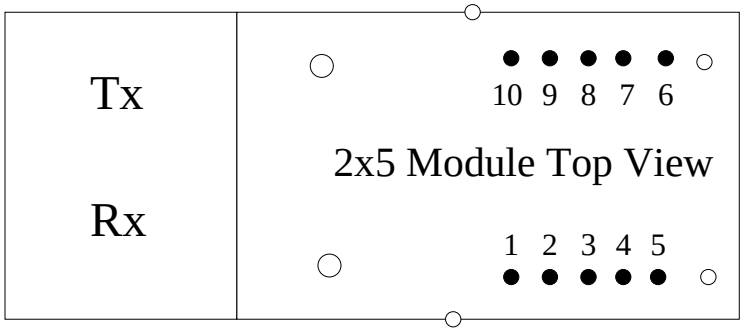

Recommend Circuit Schematic

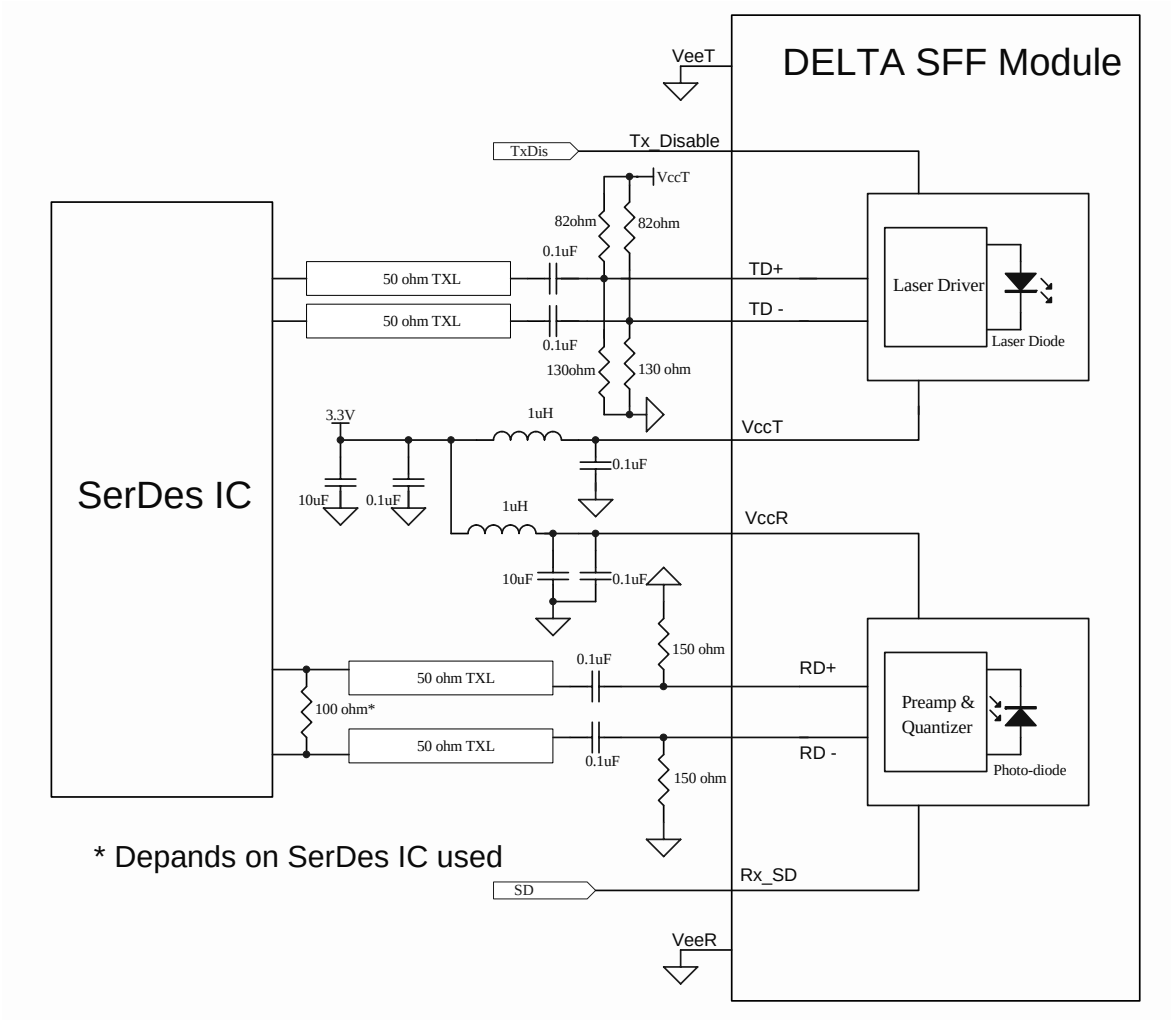

Package Outline Drawing

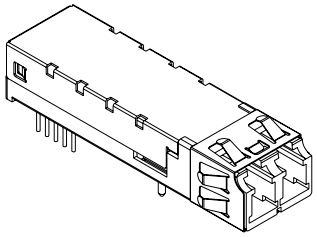

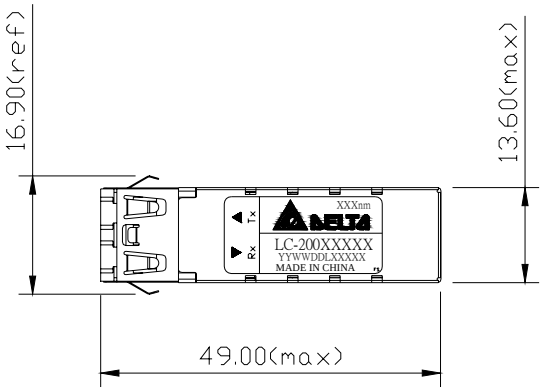

Unit:mm
Tolerance:±0.2

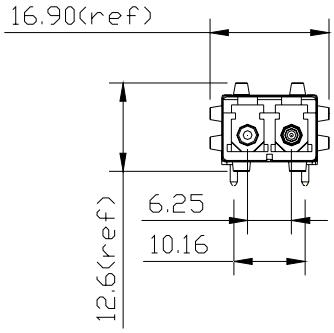

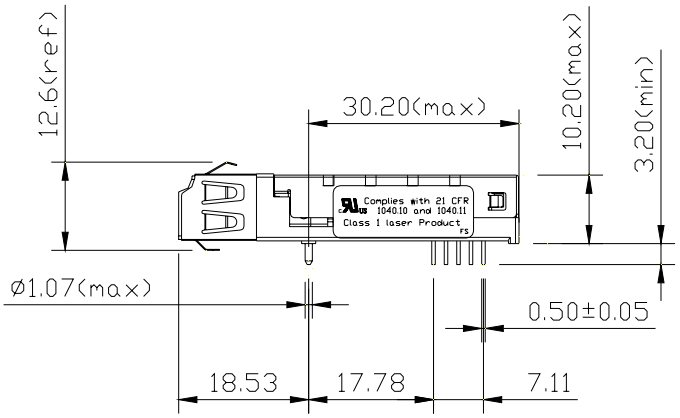

Regulatory Compliance

Test Item	Reference	Qty'	Evaluation
(#1) Electromagnetic Interference EMC	FCC Class B EN 55022 Class B CISPR 22	5	(1) Satisfied with electrical characteristics of product spec. (2) No physical damage
(#2) Immunity： Radio Frequency Electromagnetic Field	EN 61000-4-3 IEC 1000-4-3	5	
(#3) Immunity： Electrostatic Discharge to the Duplex SC Receptacle	EN 61000-4-2 IEC 1000-4-2 IEC 801.2	5	
(#4) Electrostatic Discharge to the Electrical Pins	MIL-STD-883C Method 3015.4 EIAJ#1988.3.2B Version 2, Machine model	5	

Order information

LC-200A$x_1x_2x_3x_4x_5x_6$

X_1： Power Supply Voltage and SD Level

4： 3.3V；Data In/Out（PECL）；SD Output（TTL）

x_2： Distance

H：2Km

x_3： Package type & coupling type

1： 2X5LC DC/DC

x_4： RoHS

Blank： Non-RoHS Compliant
R： RoHS Compliant

x_5： Housing Type

M： Metal Housing

X_6： Temperature

Blank： 0 to 70℃
H： -10 to 85℃
T： -40 to 85℃