LBN16004 MHz SAW Filter Electrical Characteristic

Specifications				
Parameter	**Unit**	**Minimum**	**Typical**	**Maximum**
Center Frequency	MHz	159.85	160	160.15
Insertion Loss	dB		27.12	29
3 dB Bandwidth	MHz	20.5	20.57	
40 dB Bandwidth	MHz		22.04	22.5
Passband variation	dB		1.0	1.2
Absolute Delay	usec		2.37	
Ultimate Rejection	dB	40	45	
Substrate Material		YZ LN		
Ambient Temperature	°C	25		
Package Size	DIP3512 (35.0x12.7x5.2mm^3)			

Typical Performance

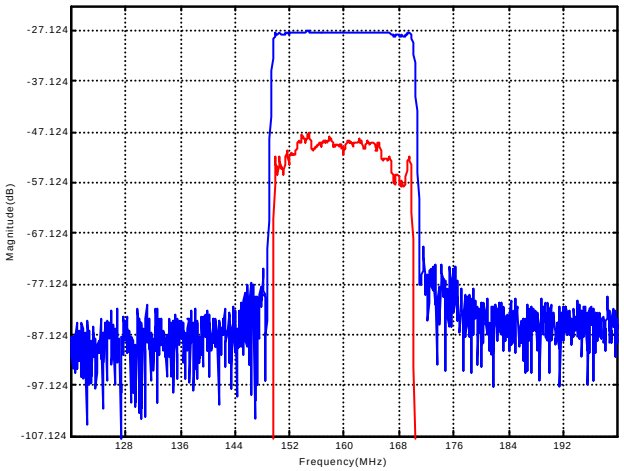

Package Outline

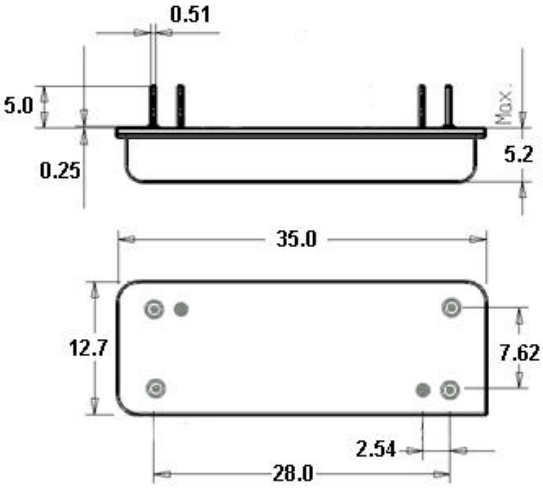

Matching Configuration

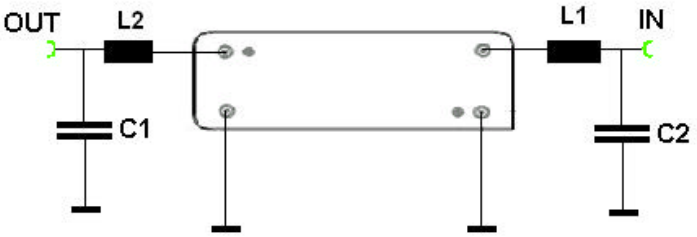

L1=L2=30nH
C1=15pF C2=10pF

Source/Load Impedance = 50 ohm