LBN08020 SAW Filter Electrical Characteristic

Specifications				
Parameter	**Unit**	**Minimum**	**Typical**	**Maximum**
Center Frequency	MHz	79.95	80	80.05
Insertion Loss	dB		23.4	25
2 dB Bandwidth	MHz	7.5	7.60	
20 dB Bandwidth	MHz		8.11	8.2
30 dB Bandwidth	MHz		8.23	8.6
40 dB Bandwidth	MHz		8.31	9.4
Passband variation	dB		0.8	1.5
Absolute Delay	usec		3.84	4.5
Ultimate Rejection	dB	50	55	
Substrate Material		YZ LN		
Ambient Temperature	°C	25		
Package Size	DIP3512 (35.0x12.7x5.2mm^3)			

Typical Performance

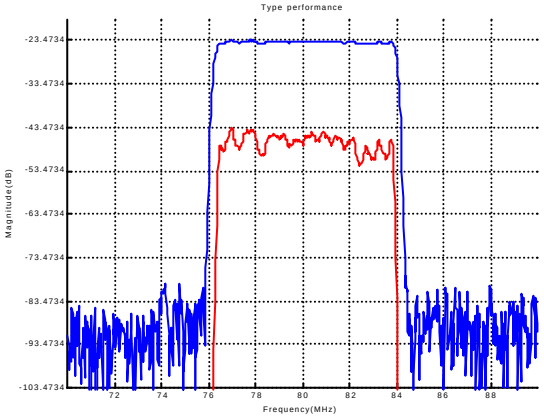

Package Outline

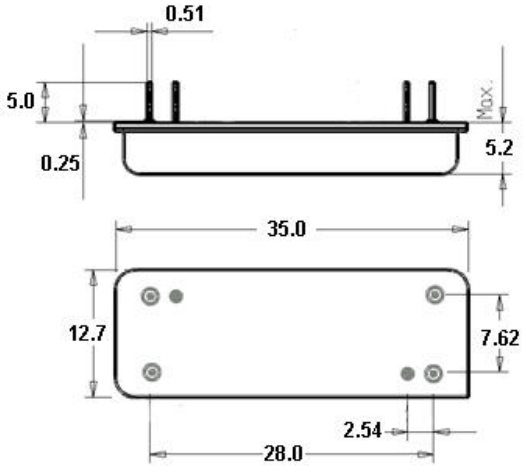

Matching Configuration

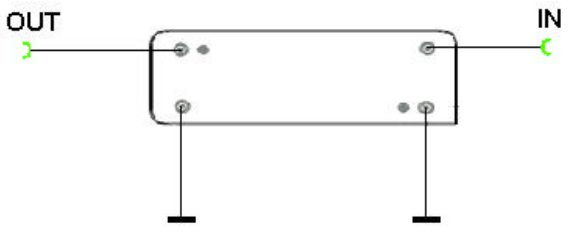

Source/Load Impedance = 50 ohm