Model:LB232-36-04L

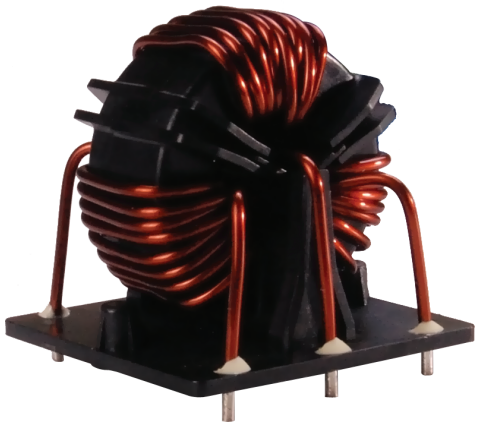

Characteristics:

It is used for switching power supply,suppressing common mode interference signal.

Technical index:

Installation method：PCB
Flame resistance：UL94-V0
Operating temperature：-20℃～+100℃
Storage temperature：-40℃～+100℃
Frequency range：DC～400Hz
Dielectric strength：2.5KV/1min（between two coils）

Electrical parameters:

Rated current	36	A
Inductance 1KHz,0.3V	0.42	mH
Inductance error	-30～+50	%
DC resistance	1.5	mΩ
Maximum operating voltage	600V AC 1000V DC	
Weight	280	g

Schematic wiring diagram:

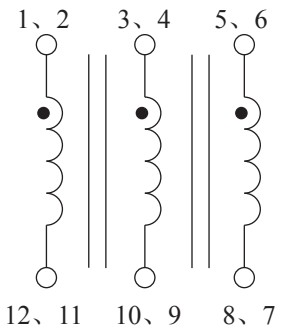

Dimensions(in mm):

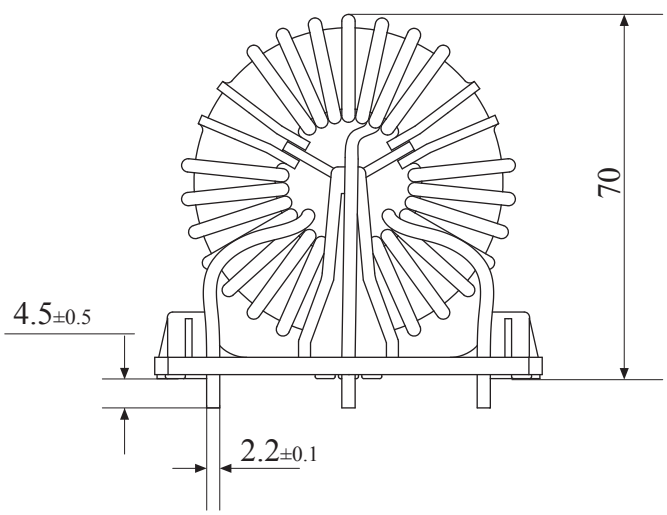

Front View

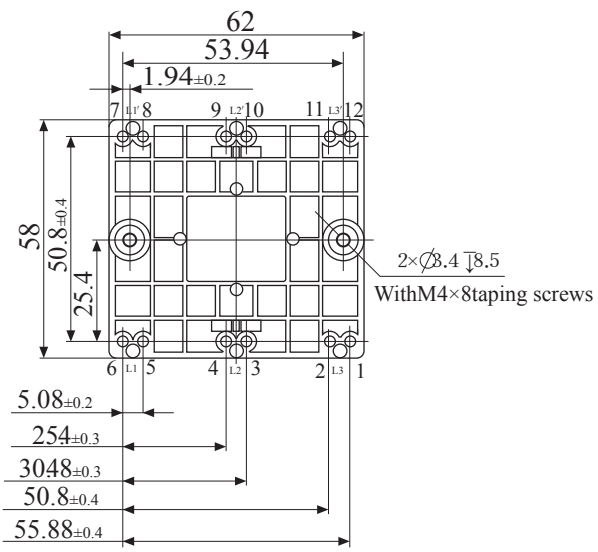

Bottom View