Ordering number : ENA2018A

LB1930MC

Monolithic Digital IC

Low-Voltage, Low-Saturation
Bidirectional Motor Driver

ON Semiconductor®

http://onsemi.com

Overview

The LB1930MC is single-channel forward/reverse DC brush motor driver. This device is optimal for CD, DVD and Blue Ray Disk player loading motors. And it is possible to use it for others as a general-purpose product.

Features

- The low saturation voltage reduces IC internal heating and allows a high voltage to be applied to the motor. Thus this device can be used even in environments with a high operating ambient temperature.
  - Output saturation voltage: Vsat1 = 0.25V typical (I_O = 0.2A)
  - (High side + low side): Vsat2 = 0.55V typical (I_O = 0.5A)
  - Operating temperature range: Ta = -30 to +85°C
- The LB1930MC features the wide operating voltage range of 2.2 to 10.8V and the low standby current drain of 0.1μA, and therefore can easily be used in battery operated systems.
- To minimize through currents, the LB1930MC internal logic passes through an internal standby state when switched by the input signals between forward/reverse and brake, or between forward and reverse.
- There are no constraints on the relationship between the input voltage and the supply voltage. For example, the LB1930MC can be used with V_{CC} = 3V, and V_{IN} = 5V.
- If the IC chip exceeds 180°C due to an output short causing a large current flow, the built-in thermal protection circuit suppresses the drive current to prevent fires or destruction of the IC.

Specifications

Absolute Maximum Ratings at Ta = 25°C

Parameter	Symbol	Conditions	Ratings	Unit
Supply voltage	V_{CC} max		11	V
Output current	I_{OUT} max		1000	mA
Output voltage handling	V_{OUT} max		V_{CC} + V_{SF}	V
Applied input voltage	I_H max		10.5	V
Allowable power dissipation	Pd max	Mounted on a specified board *	750	mW
Operating temperature	Topr		-30 to +85	°C
Storage temperature	Tstg		-55 to +150	°C

* Specified board: 114.3mm × 76.1mm × 1.6mm, glass epoxy board.

Caution 1) Absolute maximum ratings represent the value which cannot be exceeded for any length of time.

Caution 2) Even when the device is used within the range of absolute maximum ratings, as a result of continuous usage under high temperature, high current, high voltage, or drastic temperature change, the reliability of the IC may be degraded. Please contact us for the further details.

.

Stresses exceeding Maximum Ratings may damage the device. Maximum Ratings are stress ratings only. Functional operation above the Recommended Operating Conditions is not implied. Extended exposure to stresses above the Recommended Operating Conditions may affect device reliability.

Allowable Operating Ranges at Ta = 25°C

Parameter	Symbol	Conditions	Ratings	Unit
Supply voltage	V_{CC}		2.2 to 10.8	V
High-level input voltage	V_{IH}		2.0 to 10	V
Low-level input voltage	V_{IL}		-0.3 to +0.3	V

Electrical Characteristics at Ta = 25°C, V_{CC} = 3V

Parameter	Symbol	Conditions	Ratings			Unit
			min	typ	max	
Current drain	$I_{CC}1$	Standby mode		0.1	5	μA
	$I_{CC}2$	Forward or reverse drive operation		15	21	mA
	$I_{CC}3$	Braking		22	31	mA
Output saturation voltage	V_O(sat)1	Forward or reverse drive: High side + low side, I_O = 200mA		0.25	0.35	V
	V_O(sat)2	Forward or reverse drive: High side + low side, I_O = 500mA		0.55	0.75	V
	V_O(sat)3	Forward or reverse drive: High side only, I_O = 200mA		0.15	0.25	V
Input current	I_{IN}	V_{IN} = 5V		70	95	μA
Thermal detection operating temperature	THD	Design guarantee value*	150	180	200	°C
Spark Killer diode						
Forward voltage	V_{SF}	I_O = 200mA		0.9	1.7	V
Reverse current	I_{RS}	V_{OUT} = 10V		0.1	5	μA

* Design guarantee value, Do not measurement.

Package Dimensions

unit : mm (typ)

3426A

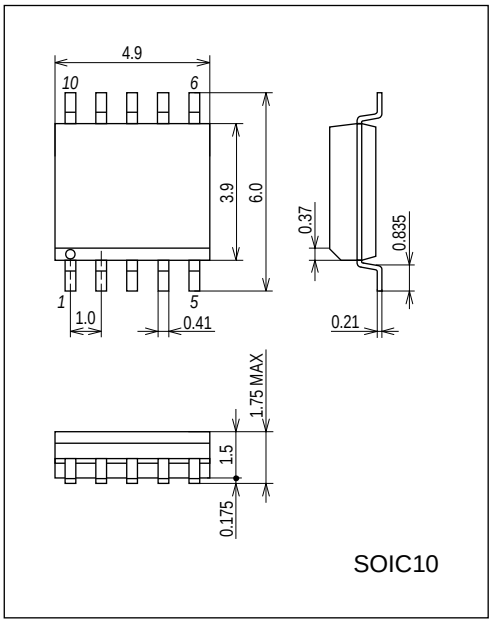

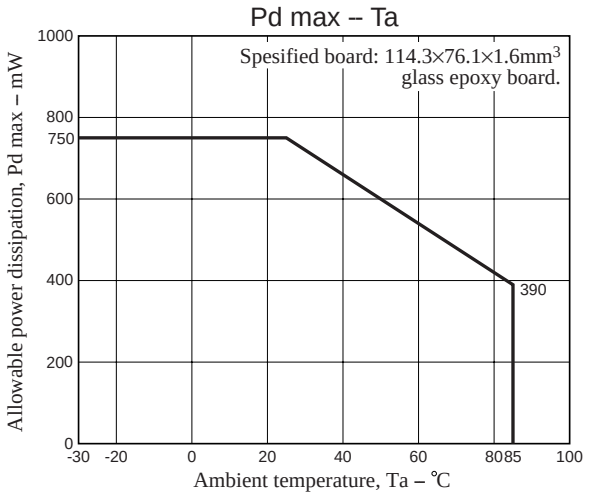

Pin Assignment

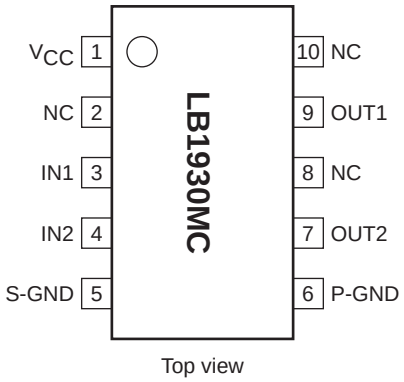

Top view

Block Diagram and Application Circuit Example

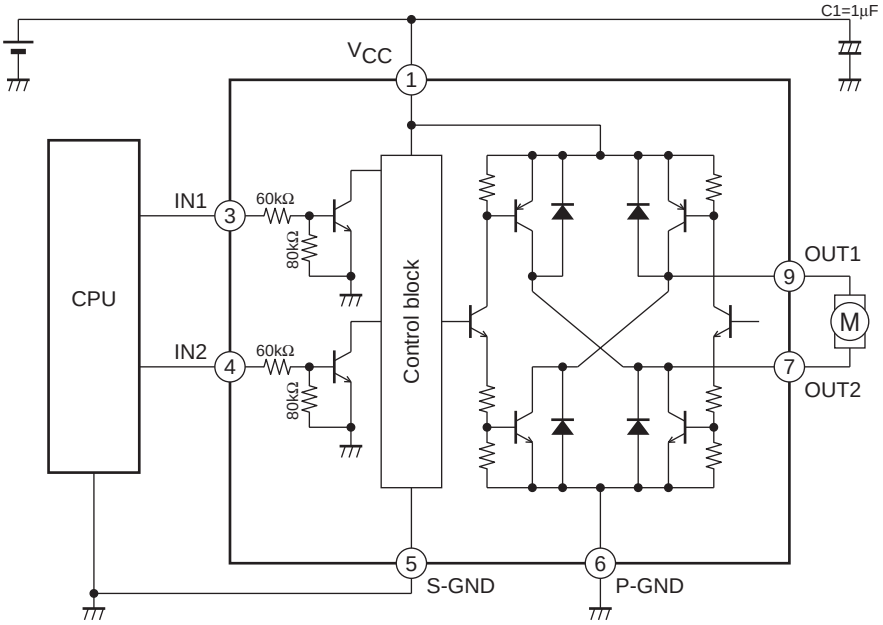

Truth Table

IN1	IN2	OUT1	OUT2	Mode
L	L	OFF	OFF	Standby
H	L	H	L	Forward
L	H	L	H	Reverse
H	H	H	H	Brake

$V_O(sat) - I_O$

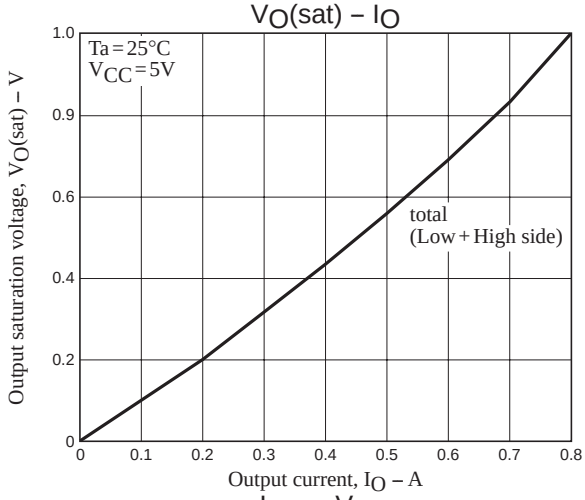

$V_O(sat) - Tc$

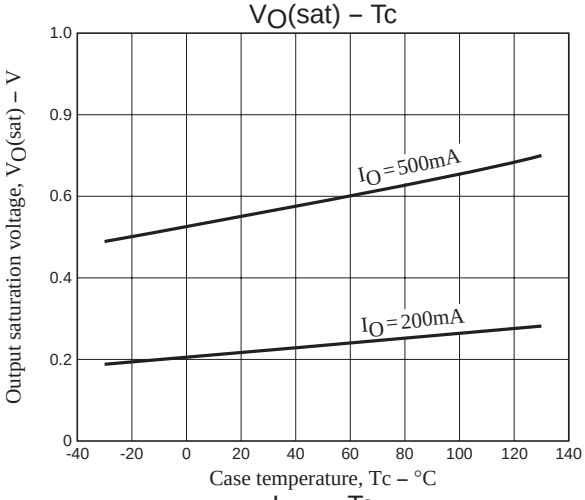

$I_{CC} - V_{CC}$

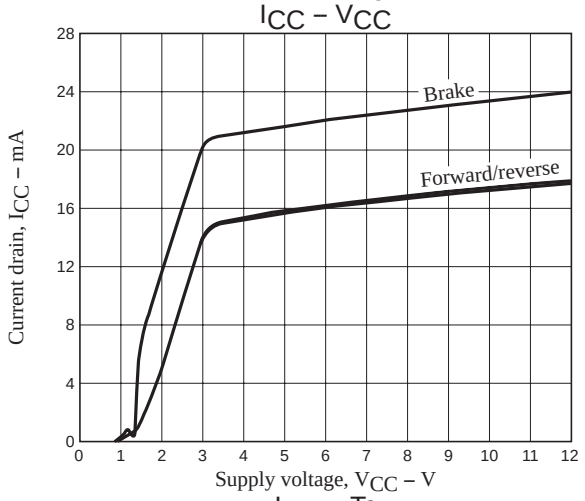

$I_{CC} - Tc$

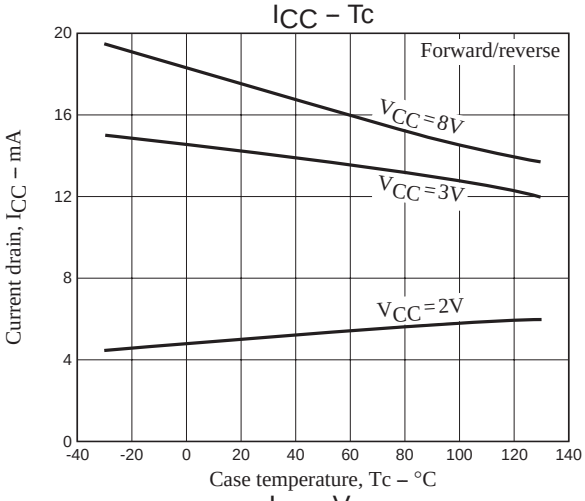

$I_{CC} - Tc$

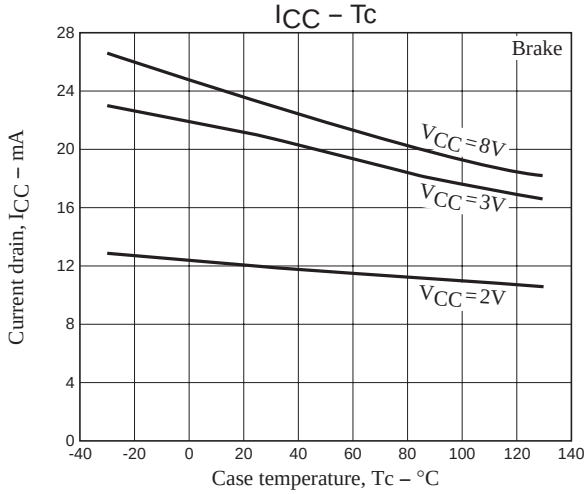

$I_{IN} - V_{IN}$

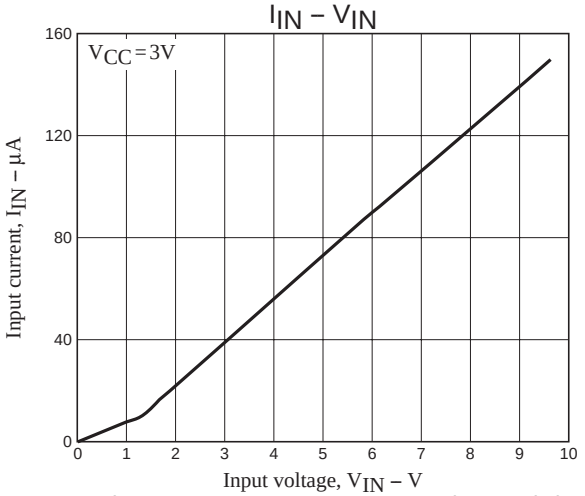

I_{CC} Standby Temperature Characteristics

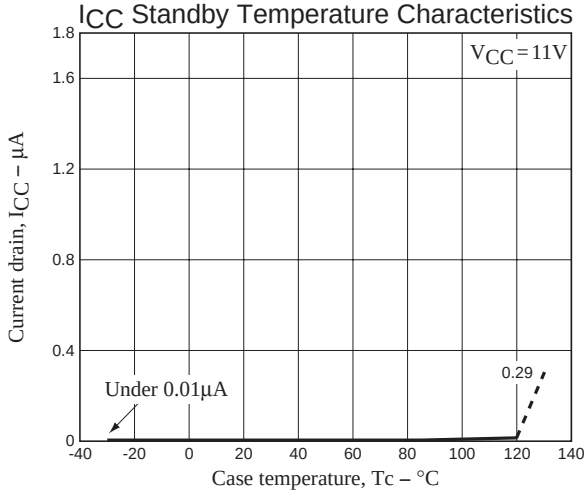

IN pin Input Current vs. Temperature Characteristics

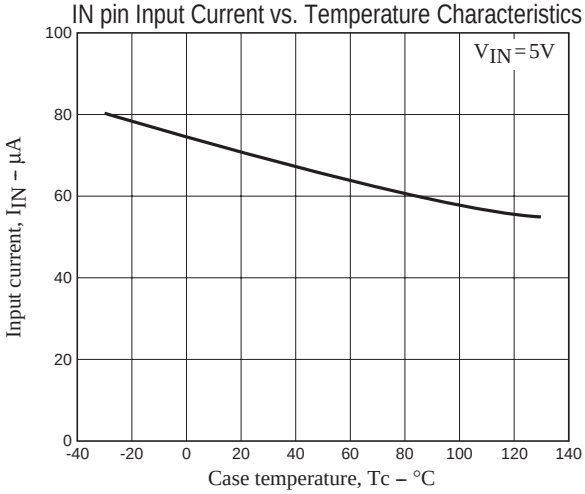

Usage Notes

Oscillation may occur in the V_{CC} and P-GND lines, since these lines carry a wide range of currents. The following may help if this is a problem.

(1) Lower the inductance of the wiring by making lines wider and shorter.
(2) Insert capacitors with good frequency characteristics close to the IC.
(3) Consider adopting the following methods if the CPU and this IC are mounted on different printed circuit boards that could easily have different ground potentials.
- Connect S-GND to the CPU ground and connect P-GND to the power system ground.
- Insert resistors of about 10kΩ in series between the controller outputs and the inputs on this IC.

ON Semiconductor and the ON logo are registered trademarks of Semiconductor Components Industries, LLC (SCILLC). SCILLC owns the rights to a number of patents, trademarks, copyrights, trade secrets, and other intellectual property. A listing of SCILLC's product/patent coverage may be accessed at www.onsemi.com/site/pdf/Patent-Marking.pdf. SCILLC reserves the right to make changes without further notice to any products herein. SCILLC makes no warranty, representation or guarantee regarding the suitability of its products for any particular purpose, nor does SCILLC assume any liability arising out of the application or use of any product or circuit, and specifically disclaims any and all liability, including without limitation special, consequential or incidental damages. "Typical" parameters which may be provided in SCILLC data sheets and/or specifications can and do vary in different applications and actual performance may vary over time. All operating parameters, including "Typicals" must be validated for each customer application by customer's technical experts. SCILLC does not convey any license under its patent rights nor the rights of others. SCILLC products are not designed, intended, or authorized for use as components in systems intended for surgical implant into the body, or other applications intended to support or sustain life, or for any other application in which the failure of the SCILLC product could create a situation where personal injury or death may occur. Should Buyer purchase or use SCILLC products for any such unintended or unauthorized application, Buyer shall indemnify and hold SCILLC and its officers, employees, subsidiaries, affiliates, and distributors harmless against all claims, costs, damages, and expenses, and reasonable attorney fees arising out of, directly or indirectly, any claim of personal injury or death associated with such unintended or unauthorized use, even if such claim alleges that SCILLC was negligent regarding the design or manufacture of the part. SCILLC is an Equal Opportunity/Affirmative Action Employer. This literature is subject to all applicable copyright laws and is not for resale in any manner.