Ordering number: EN3950C

Monolithic Digital IC

LB1839M

Low-voltage/Low-saturation Bidirectional Constant-Voltage Regulated Motor Driver

Overview

The LB1839M is a low-voltage, low-saturation, three-input type two-channel bidirectional motor driver that permits switching between constant-voltage regulated output and saturated output. The design of the LB1839M is ideal for a two-phase bipolar driver for stepping motors.

Features

- Wide operating voltage range (3.0 to 9.0 V).
- Low saturation voltage
  V_O (sat) = 0.40 V at I_O = 200 mA.
- Consumes almost no current in standby mode (0.1 µA or less).
- Permits setting of bidirectional constant-voltage regulated value.
- Three-input type that is ideal for a two-phase bipolar driver.
- Permits switching between constant-voltage regulated output and saturated output.
- Built-in reference voltage coupled to input.
- Compact MFP14S package.

Package Dimensions

unit: mm

3111-MFP14S

[LB1839M]

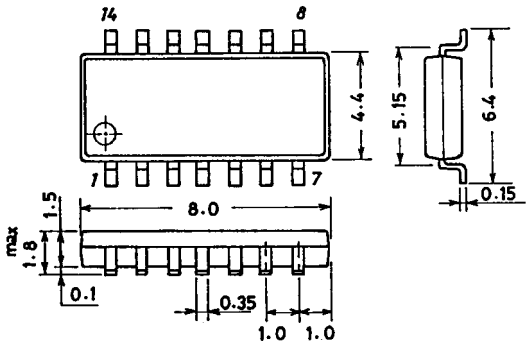

SANYO : MFP14S

Specifications

Absolute Maximum Ratings at Ta = 25 °C

Parameter	Symbol	Conditions	Ratings	Unit
Maximum supply voltage	V_{CC} max		10.5	V
Output current	Im max		250	mA
Applied input voltage	V_{IN}		–0.3 to +10	V
Allowable power dissipation	Pd max	With board (30 x 30 x 1.5 mm^3)	800	mW
Operating temperature	Topr		–20 to +80	°C
Storage temperature	Tstg		–40 to +125	°C

Allowable Operating Ranges at Ta = 25 °C

Parameter	Symbol	Conditions	Ratings	Unit
Supply voltage	V_{CC}		3.0 to 9.0	V
Input [H] voltage	V_{IH}		3.0 to 9.0	V
Input [L] voltage	V_{IL}		–0.3 to +0.7	V
Control voltage	V_C		0.2 to 6.0	V

Electrical Characteristics at Ta = 25 °C, V_{CC} = 6 V

Parameter	Symbol	Conditions	min	typ	max	Unit
Supply current	$I_{CC}0$	During standby		0.1	10	µA
	$I_{CC}1$	(For two channel) During bidirectional operation, during control, load open		3.5	5.0	mA
	$I_{CC}2$	(For two channel) During bidirectional operation, during saturation, load open		4.0	6.0	mA
Output saturation voltage	Vsat1	I_O = 100 mA (upper side + lower side)		0.30	0.40	V
	Vsat2	I_O = 200 mA (upper side + lower side)		0.40	0.55	V
	Vsat3	I_O = 200 mA (lower side)	0.07	0.10	0.15	V
Reference voltage	Vref	Ivref = 1 mA	1.85	2.0	2.15	V
Output voltage voltage characteristics	$\frac{\Delta V_O}{\Delta V_{CC}}$	V_O = 5 V, V_{CC} = 5.5 to 9 V, I_O = 100 mA			20	mV
Output voltage current characteristics	$\frac{\Delta V_O}{\Delta I_{CC}}$	V_O = 5 V, V_{CC} = 6 V, I_O = 10 to 100 mA			50	mV
Input current	I_{IN}	V_{IN} = 5 V		90	150	µA
Output voltage	V_O	Between OUT and GND	2.5 x V_C		2.7 x V_C	V

Equivalent Circuit Block Diagram

(For one channel)

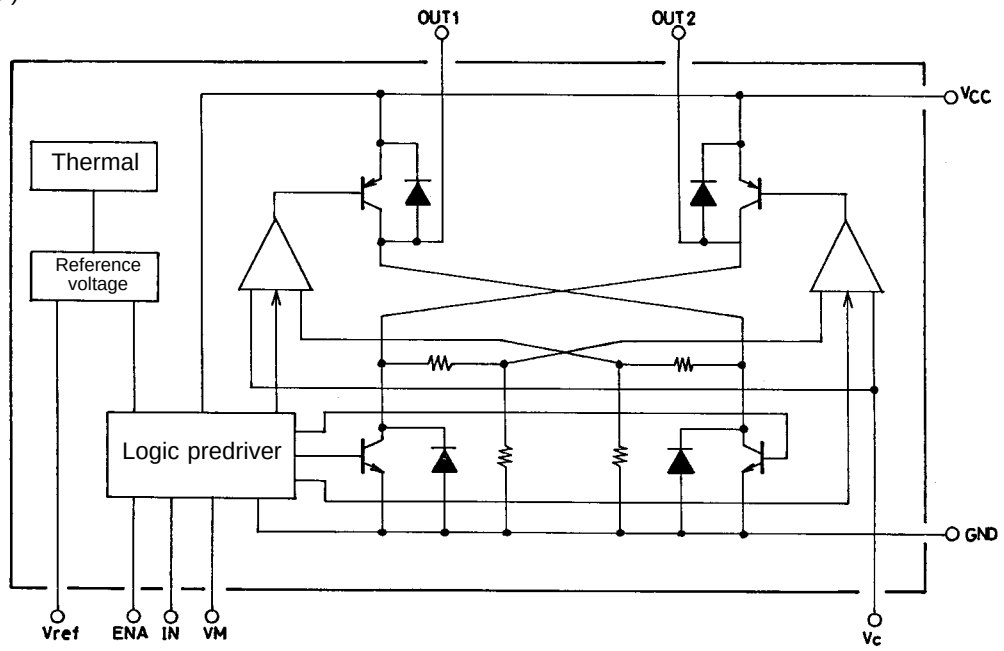

Truth Table

Input			Output		Mode
ENA	IN 1/2	VM 1/2	OUT 1/3	OUT 2/4	
L	—	—	OFF	OFF	Standby
H	L	L	H	L	Constant-voltage regulated forward operation
H	L	H	H	L	Saturated forward operation
H	H	L	L	H	Constant-voltage regulated reverse operation
H	H	H	L	H	Saturated reverse operation

The constant-voltage regulated output V_O (= voltage between H side output and GND) is controlled by 2.5 x V_C. The output is in the saturated state when the V_C input range is 0.2 to 6 V and $V_O \geqq V_{CC}$.

Pin Assignment

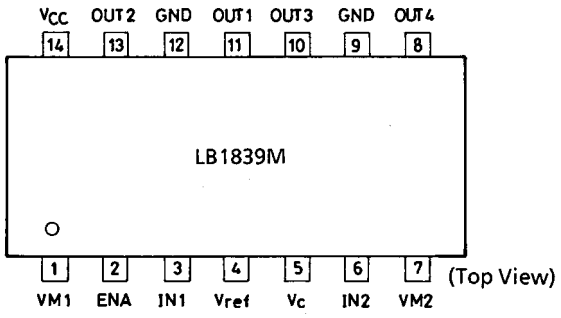

Note: Both GND pins must be grounded.

Pin Functions

Pin No.	Symbol	Equivalent Circuit Diagram	Pin Function
14	V_{CC}		Power supply pin for output and controller.
9 12	GND		GND pins for output and controller. Both must be grounded.
3 6	IN2 IN1	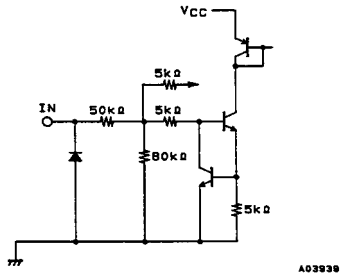	Input pins that determine the excitation of the outputs. IN1 control outputs OUT1 and OUT2; IN2 control outputs OUT3 and OUT4. L: –0.3 to +0.7 V H: 3.0 to 9.0 V There are no limitations on the magnitude relationships between the V_{CC} and V_{IN} supply voltages.
8 10 11 13	OUT4 OUT3 OUT1 OUT2	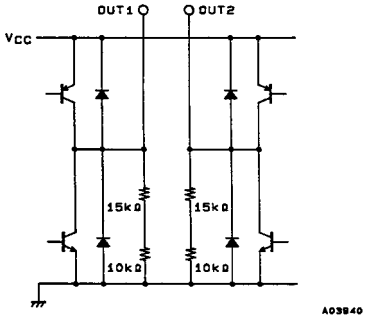	Output pins. Have built-in spark killer diodes.
4	Vref	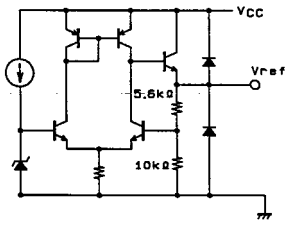	Reference voltage (= 2.0 V).
5	V_C	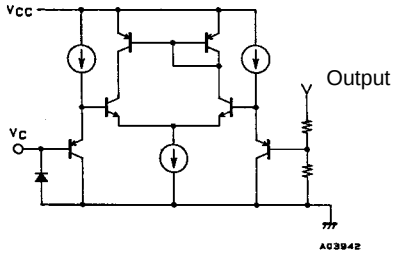	Input pins that determine the constant-voltage regulated output level. The constant-voltage regulated output V_O (= voltage between H side output and GND) is controlled by V_O = 2.5 x V_C. There are no limitations on the magnitude relationships between the V_{CC} and V_C supply voltages.
2	ENA	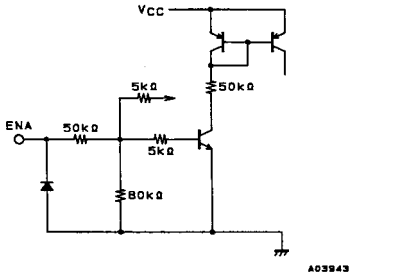	Standby/drive control input pin Current consumption in standby mode is 10 µA or less. L: –0.3 to + 0.7 V H: 3.0 to 9.0 V
1 7	VM1 VM2	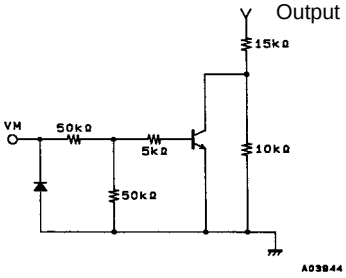	Output voltage setting Control input pin for switching between constant voltage output and saturated output. There are no limitations on the magnitude relationships between the V_{CC}, V_{M1} and V_{M2} supply voltages. L: –0.3 to + 0.7 V (constant-voltage regulated output) H: 3.0 to 9.0 V (saturated output)

Sample Application Circuit

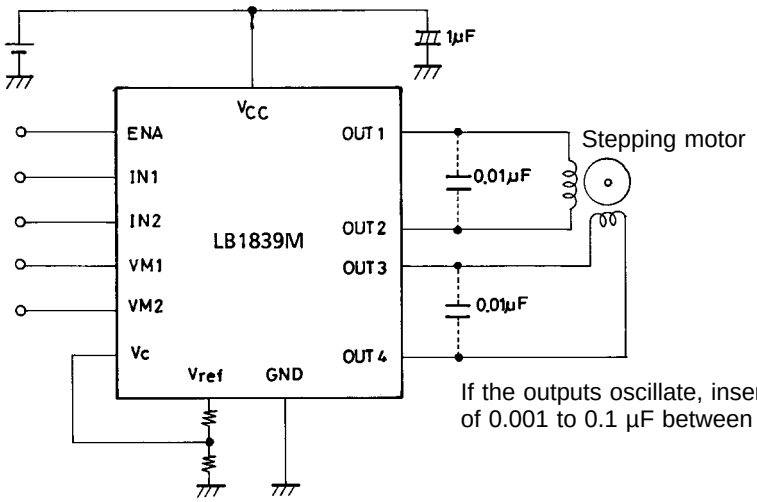

If the outputs oscillate, insert capacitors of 0.001 to 0.1 µF between the outputs.

Pd max — Ta

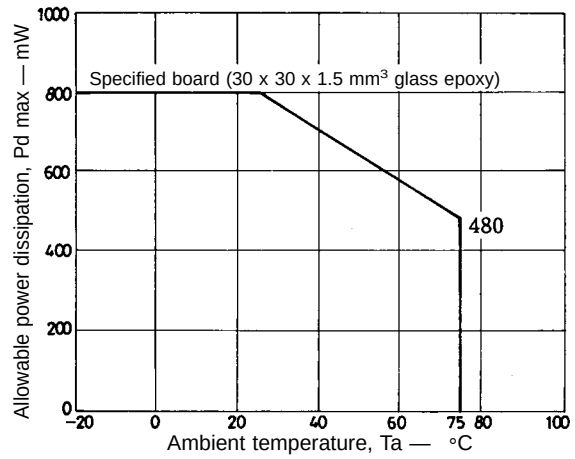

V_O(sat) — I_O

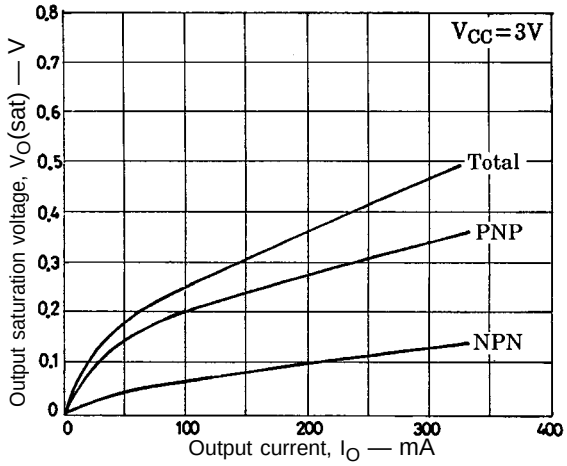

I_{IN} — V_{IN}

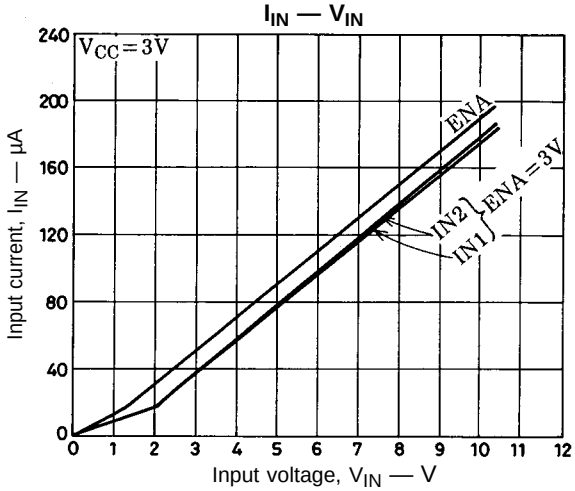

V_O — V_{CC}

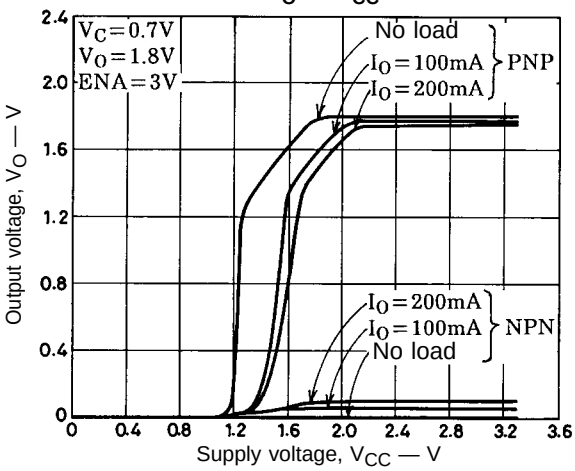

■ No products described or contained herein are intended for use in surgical implants, life-support systems, aerospace equipment, nuclear power control systems, vehicles, disaster/crime-prevention equipment and the like, the failure of which may directly or indirectly cause injury, death or property loss.

■ Anyone purchasing any products described or contained herein for an above-mentioned use shall:
① Accept full responsibility and indemnify and defend SANYO ELECTRIC CO., LTD., its affiliates, subsidiaries and distributors and all their officers and employees, jointly and severally, against any and all claims and litigation and all damages, cost and expenses associated with such use:
② Not impose any responsibility for any fault or negligence which may be cited in any such claim or litigation on SANYO ELECTRIC CO., LTD., its affiliates, subsidiaries and distributors or any of their officers and employees jointly or severally.

■ Information (including circuit diagrams and circuit parameters) herein is for example only; it is not guaranteed for volume production. SANYO believes information herein is accurate and reliable, but no guarantees are made or implied regarding its use or any infringements of intellectual property rights or other rights of third parties.

This catalog provides information as of June, 1995. Specifications and information herein are subject to change without notice.