Ordering number: EN 880C

Monolithic Digital IC

NO.880C

LB1407, 1417

AC/DC Voltage Level Meter

Features and Functions

- The LB1407 and LB1417 are based on dB scale and linear scale respectively.
- The input level is indicated in the form of a bar by means of 7 red/green LEDs.
- The LED current is made variable with an external resistor.
- An input amplifier is built in.
- A wide range of supply voltages is available from 5.5V to 16V.

Comparator Level at T_a=25°C, V_{CC}=12V

[LB1407]

Comparator level	Pin No.	dB scale typ	unit	(Reference: Linear scale) typ	unit
D1	8	-20	dB	150	mV
D2	9	-10	dB	485	mV
D3	10	-6	dB	770	mV
D4	11	-3	dB	1090	mV
D5	12	0	dB	1530	mV
D6	13	3	dB	2150	mV
D7	14	6	dB	3000	mV

[LB1417]

Comparator level	Pin No.	Linear scale typ	unit	(Reference: dB scale) typ	unit
D1	8	430	mV	-14.0	dB
D2	9	840	mV	-8.0	dB
D3	10	1280	mV	-4.4	dB
D4	11	1700	mV	-1.9	dB
D5	12	2150	mV	0	dB
D6	13	2570	mV	1.6	dB
D7	14	3000	mV	2.9	dB

Pin Assignment

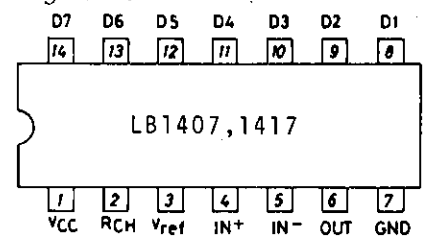

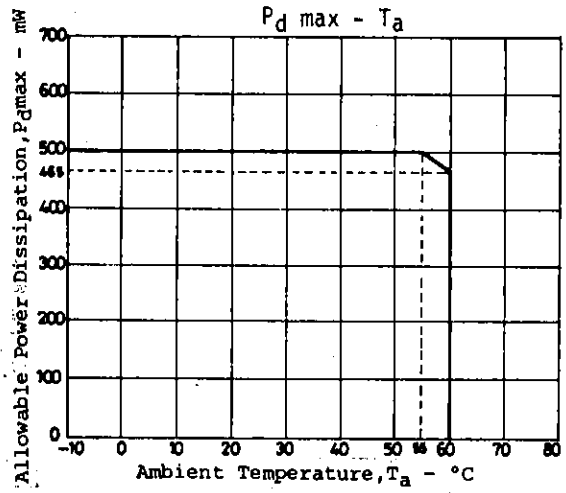

Package Dimensions 3003A-D14IC
(unit: mm)

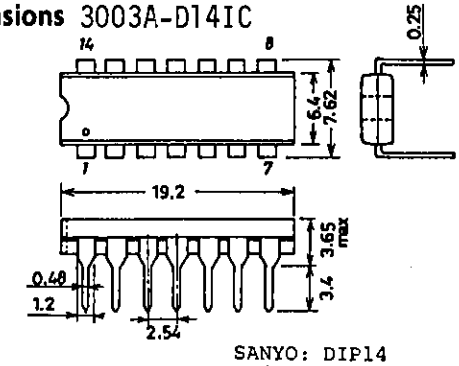

SANYO: DIP14

Absolute Maximum Ratings at T_a=25°C

				unit
Maximum Supply Voltage	V_{CC}max	Pin 1	-0.3 to +18	V
Input Voltage	V_{IN}	Pin 4,5	-0.3 to V_{CC}	V
D_1 to D_7 Output Voltage	$V_{OUT(D)}$	D_1 to D_7 OFF	-0.3 to +18	V
D_1 to D_9 Output Current	$I_{OL(D)}$	Pins 8 to 14, D_1 to D_7 ON	+30	mA
Reference Flow-out Current	I_{ref}	Pin 3	-1 to 0	mA
V_{OUT} Supply Voltage	V_{OUT}	Pin 6	-0.3 to +6	V
Allowable Power Dissipation	$P_d$max	Ta=55°C	500	mW
Operating Temperature	**Topr**		-20 to +60	°C
Storage Temperature	T_{stg}		-40 to +125	°C

Allowable Operating Conditions at Ta=25°C

				unit
Recommended Supply Voltage	V_{CC}	Pin 1	+5.5 to +16	V
Input Voltage	V_{IN}^+ or V_{IN}^-	Pin 4 or 5	-0.3 to V_{CC}	V
Output Pin Load Resistance	R_L	Between pin 6 OUT and pin 7 GND.	15k to 20k	ohm

Electrical Characteristics at T_a=25°C, V_{CC}=12V (Unless V_{CC} is otherwise specified)

			min	typ	max	unit
Input Bias Current (Amplifier)	$I_{IN}^+(A)$	Pin4, V_{IN}^+=0V, V_{IN}^-=3V GND=0V	-2		0	μA
	$I_{IN}^-(A)$	Pin5, V_{IN}^+=3V, V_{IN}^-=0V GND=0V	-2		0	μA
Input Bias Current (Comparator) + Output Leak Current	$I_{IN}^+(C)$ + $I_{OL}(A)$	Pin6, V_{IN}^+=0V, V_{IN}^-=3V, OUT=0V, GND=0V	-10		0	μA
Offset Voltage (1)	$V_{offset(1)}$	Pin6, V_{CC}=6V, V_{IN}^+=V_{IN}^-=0V, GND=-6V, GAIN=20dB	-150		+150	mV
Offset Voltage (2)	$V_{offset(2)}$	Pin6, V_{IN}^+=V_{IN}^-=0V, GND=0V, GAIN=20dB	0		+150	mV
Reference Voltage	V_{ref}	Pin2, I_{ref}=0 to 1mA	2.7		3.1	V
Current Dissipation	I_{CC}	Pin1, V_{IN}^+=3V, V_{IN}^-=0V		8	15	mA
Amplifier Gain	VG	Open loop	30			dB
Output Flow-out Current	I_{OH}	Pin6, V_{IN}^+=3V, V_{IN}^-=0V V_{OUT}=0V			-10	mA
Pin D Output ON Voltage	$V_{OL(D)}$	Pin8 to 14, D1 to D7, I_{OL}=20mA, V_{IN}^+=3V, V_{IN}^-=0V			1.2	V
Pin D Output Leak Current	$I_{OH(D)}$	Pin8 to 14, D1 to D7, V_{IN}^+=0V, V_{IN}^-=3V, $V_{D1\ to\ D7}$=12V			10	μA
Output Voltage (Amplifier)	V_{OH}	Pin6, V_{CC}=5.5V, V_{IN}^+=3V, V_{IN}^-=0V, R_L=15kohms	4			V
		Pin6, V_{CC}=12V, V_{IN}^+=3V, V_{IN}^-=0V, R_L=15kohms	9.5			V

Equivalent Circuit

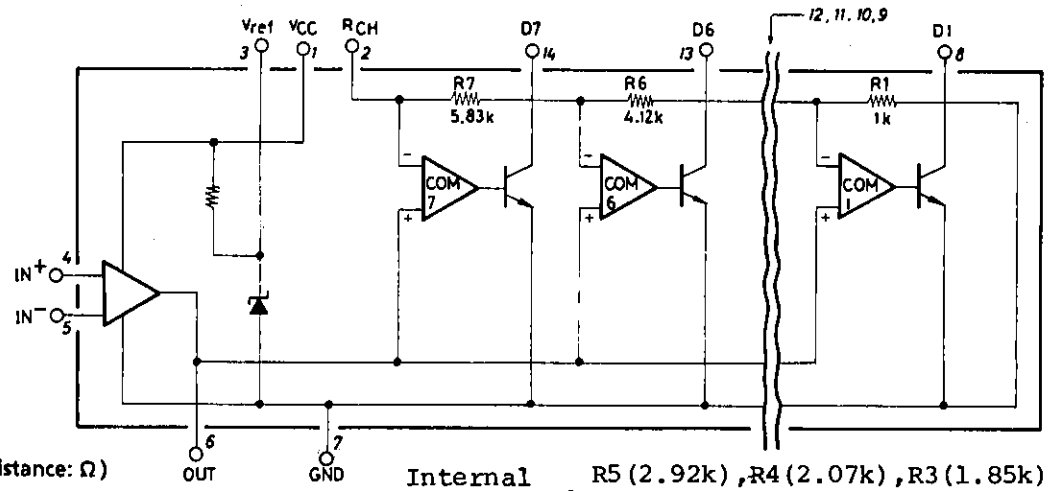

Unit (resistance: Ω)

Internal resistors : R5(2.92k), R4(2.07k), R3(1.85k), R2(2.16k) (R_1 to R_7 of LB1417 are all 2.85kohm).

Application Circuit

Unit (resistance: Ω, capacitance: F)

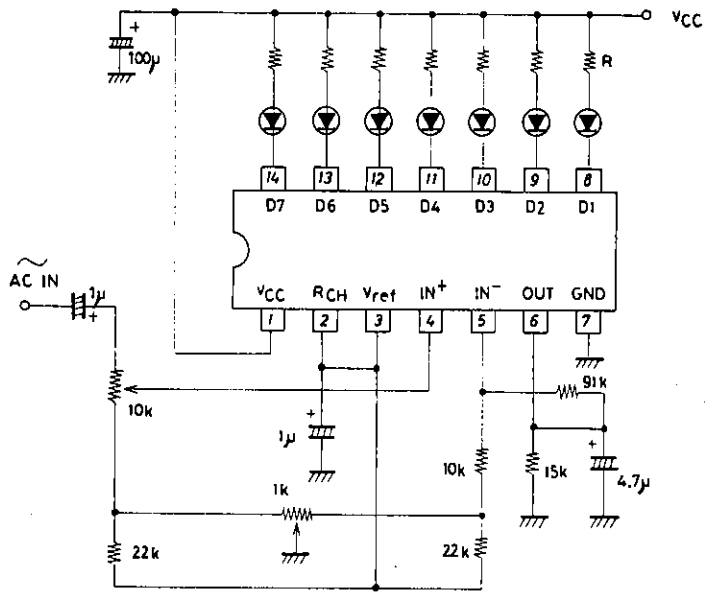

Current flowing to LED :

$$I_{LED} = \frac{V_{CC} - 3}{R}$$

(Example) Assuming I_{LED}=10mA at V_{CC}=12V, R is :

$$R = \frac{12 - 3}{10 \times 10^{-3}} = \frac{9}{10 \times 10^{-3}} = 900\Omega$$

■ No products described or contained herein are intended for use in surgical implants, life-support systems, aerospace equipment, nuclear power control systems, vehicles, disaster/crime-prevention equipment and the like, the failure of which may directly or indirectly cause injury, death or property loss.

■ Anyone purchasing any products described or contained herein for an above-mentioned use shall:
① Accept full responsibility and indemnify and defend SANYO ELECTRIC CO., LTD., its affiliates, subsidiaries and distributors and all their officers and employees, jointly and severally, against any and all claims and litigation and all damages, cost and expenses associated with such use:
② Not impose any responsibility for any fault or negligence which may be cited in any such claim or litigation on SANYO ELECTRIC CO., LTD., its affiliates, subsidiaries and distributors or any of their officers and employees jointly or severally.

■ Information (including circuit diagrams and circuit parameters) herein is for example only; it is not guaranteed for volume production. SANYO believes information herein is accurate and reliable, but no guarantees are made or implied regarding its use or any infringements of intellectual property rights or other rights of third parties.