Monolithic Digital IC
LB11961-Single-Phase Full-Wave Fan Motor Driver

Overview

The LB11961 is a single-phase bipolar drive motor driver that easily implements direct PWM motor drive systems with excellent efficiency. The LB11961 is optimal for fan motor drive in personal computer power supply systems and CPU cooling fan systems.

Features

- Single-phase full-wave drive (16V, 1.0A transistors are built in)
- Built-in variable speed function controlled by a thermistor input
  The LB11961 can implement quiet, low-vibration variable speed control using externally clocked high side transistor direct PWM drive.
- Built-in regenerative diode (Di); only requires a minimal number of external components.
- Built-in HB
- Minimum speed setting pin (allows full-speed mode operation at startup)
- Operates in full-speed mode when the thermistor is removed.
- Built-in lock protection and automatic recovery circuits
- FG (speed detection) and RD (lock detection) outputs
- Built-in thermal shutdown circuit

Specifications

Absolute Maximum Ratings at Ta=25℃

Parameter	Symbol	Conditions	Ratings	Unit
Vcc maximum output	Vcc max		18	V
OUT pin maximum output current	I_{OUT} max		1.0	A
OUT pin output voltage	V_{OUT} max		18	V
HB maximum output current	IHB max		10	mA
VTH input pin voltage	VTH max		6	mA
RD/FG output pin output voltage	VRD/FG max		18	V
RD/FG output current	IRD/FG max		10	mA
Allowable power dissipation	Pd max	When mounted on a circuit board *1	1.1	W
Operating temperature	Topr		-30 to +90	℃
Storage temperature	Tstg		-55 to +150	℃

*1 Specified circuit board: 114.3 x 76.1 x 1.6mm^3, glass epoxy.

Recommended Operating Conditions at Ta=25℃

Parameter	Symbol	Conditions	Ratings	Unit
Vcc supply voltage	Vcc		4.5 to 16	V
VTH input level voltage range	VTH		0 to 9	V
Hall sensor input common-mode input voltage range	VICM		0.2 to 3	V

Electrical Characteristics Unless otherwise specified Ta=25℃, Vcc=12V

Parameter	Symbol	Conditions	Ratings			Unit
			min	typ	Max	
Circuit current	I_{CC}^1	Drive mode	12	18	24	mA
	I_{CC}^2	Lock protection mode	8	11	16	μA
6VREG voltage	V6VREG	I6VREG=5mA	5.8	6	6.2	V
HB voltage	VHB	IHB=5mA	1.10	1.25	1.40	V
CPWM high-level voltage	VCRH		3.45	3.6	3.75	V
CPWM low-level voltage	VCRL		1.95	2.05	2.15	V
CPWM oscillator frequency	FPWM	C=100pF	18	25	32	kHz
CT pin high-level voltage	VCTH		3.45	3.6	3.75	V
CT pin low-level voltage	VCTL		1.55	1.7	1.85	V
ICT charge current	ICT1		1.5	2	2.5	μA
ICT discharge current	ICT2		0.15	0.2	0.25	μA
ICT charge/discharge current ratio	RCT		8.5	10	11.5	
OUT output low saturation voltage	V_{OL}	I_O=200mA		0.2	0.3	V
OUT output high saturation voltage	V_{OH}	I_O=200mA		0.9	1.1	V
Hall sensor input sensitivity	VHN	Zero peak value (including offset and hysteresis)		10	20	mV
RD/FG output pin low-level voltage	VRDL/FGL	IRD/FG=5mA		0.2	0.3	V
RD/FG output pin leakage current	IRDL/FGL	VRD/FG=7V			30	μA

Package Dimensions

Unit: mm(typ)

3178B

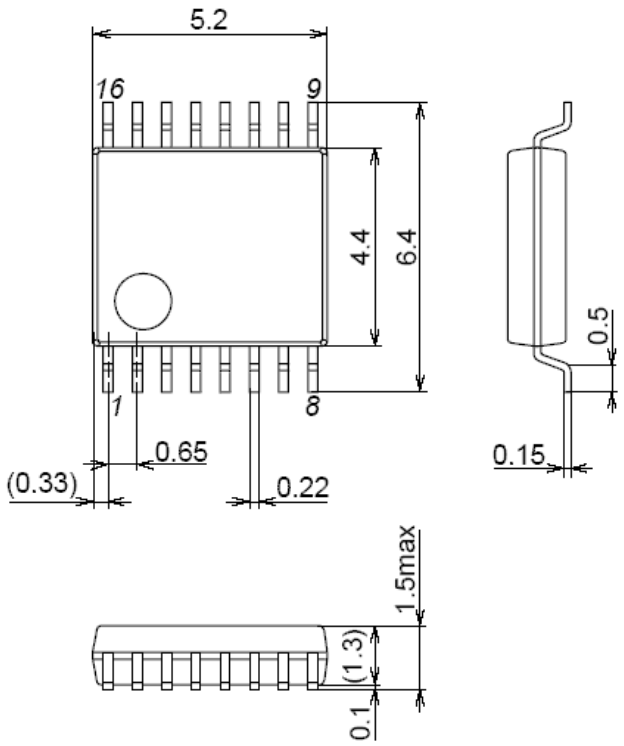

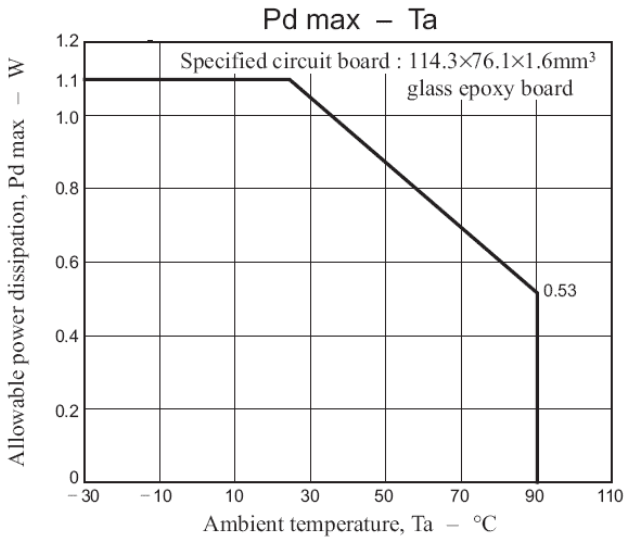

SSOP16(225mil)

Truth Table

VTH	IN-	IN+	CPWM	CT	OUT1	OUT2	FG	RD	Mode
Low (open)	High	Low	High	Low	High	Low	Low	On	During rotation-drive (PWM off)
	Low	High			Low	High	Off		
High	High	Low	Low		Off	Low	Low		During rotation-regeneration (PWM on)
	Low	High			Low	Off	Off		
-	High	Low	-	High	High	Off	Low	Off	Lock protection
-	Low	High			Off	High	Off		

CPWM-High is the state where CPWM > VTH, and CPWM-Low is the state where CPWM < VTH.

Open: The LB11961 operates in full-speed mode when the thermistor is removed.

Pin Assignment

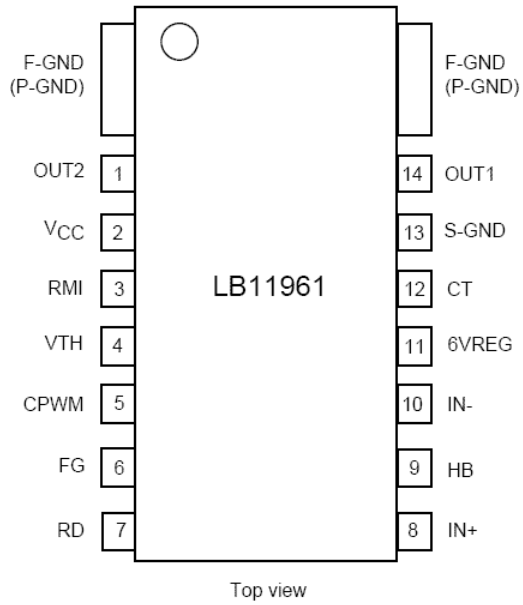

Top view

F-GND (P-GND): The motor system ground and the heat sink. Since the heat generated Since the heat generated by the chip is dissipated through F-GND, the thermal resistance is lowered by increasing the area of the copper foil and solder surface in the printed circuit pattern.

S-GND: Control system ground.

Block Diagram

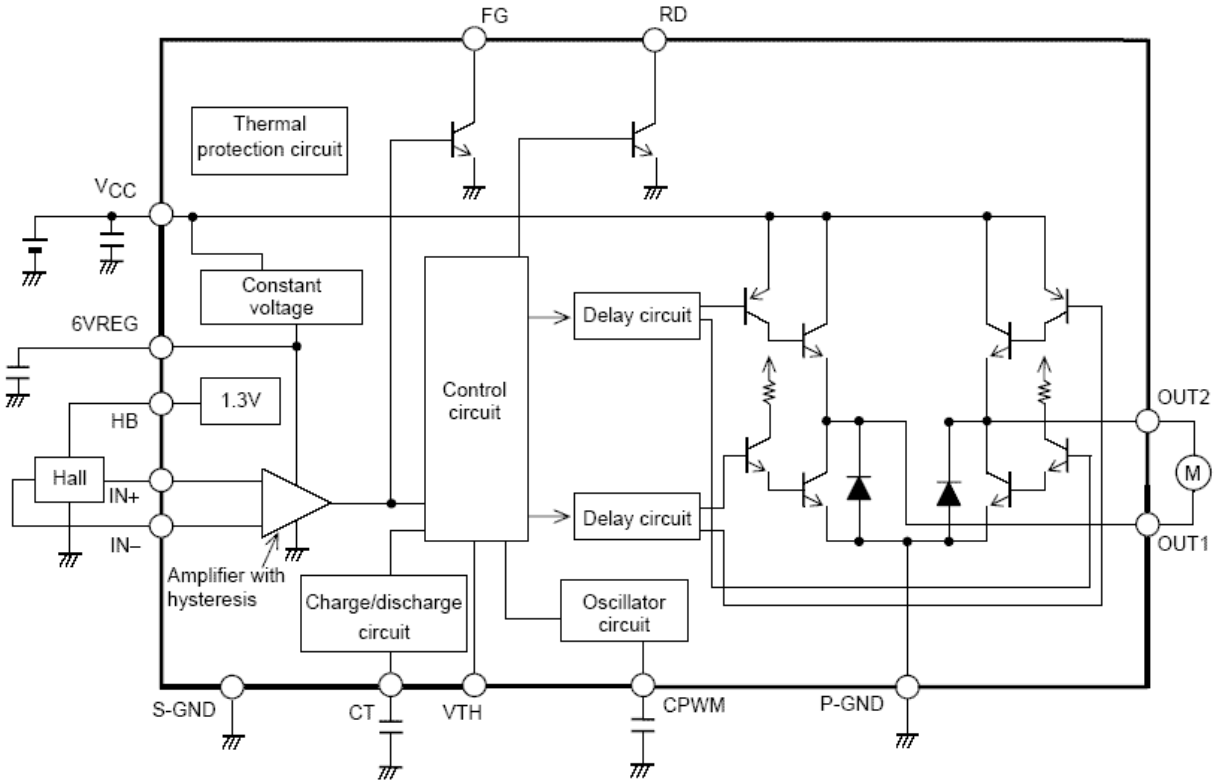

Application Circuit Example

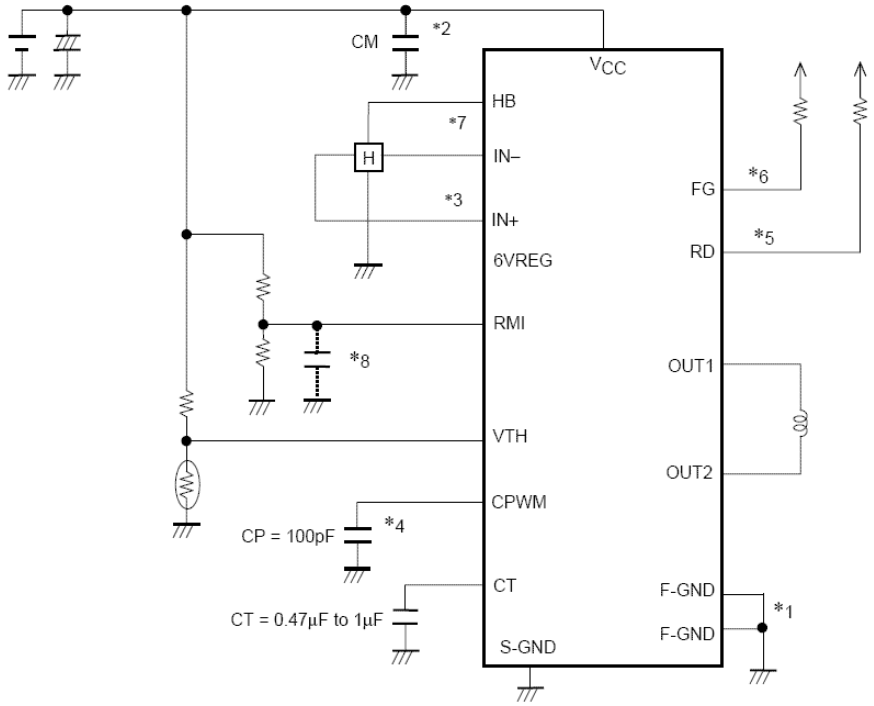

***1.Power supply and ground lines**

P-GND is connected to the motor power supply system and S-GND is connected to the control circuit power supply system. These two systems should be formed from separate lines and the control system external components should be connected to S-GND.

***2. Regeneration power supply stabilization capacitor**

The capacitor CM provides power supply stabilization for both PWM drive and kickback absorption. A capacitor with a value of over 0.1µF is used for CM. A large capacitor must be used when the coil inductance is large or when the coil resistance is low. Since this IC adopts a technique in which switching is performed by the high side transistor and regeneration is handled by the low side transistor, the pattern connecting CM to VM and P-GND must be as wide and as short as possible.

***3. Hall sensor input**

Lines that are as short as possible must be used to prevent noise from entering the system. The Hall sensor input circuit consists of a comparator with hysteresis (20mV). We recommend that the Hall sensor input level be at least three times this hysteresis, i.e. at least 60mVp-p.

***4.PWM oscillator frequency setting capacitor**

If a value of 100pF is used for CP, the oscillator frequency will be f=25kHz, and this will be the basic frequency of the PWM signal.

***5. RD output**

This is an open collector output. It outputs a low level when the motor is turning and a high level when it is stopped. This pin must be left open if unused.

***6. FG output**

This is an open collector output, and a rotation count detection function can be implemented using this FG output, which corresponds to the phase switching. This pin must be left open if unused.

***7. HB pin**

This pin provides a Hall effect sensor bias constant-voltage output of 1.25V.

***8. RMI pin**

Connect this pin to VTH if unused. Even if unused, the IC is set internally to operate at a 10% drive duty at the voltage corresponding to the lowest speed. (The capacitor is used to set up full-speed mode at startup.)

Control Timing Chart

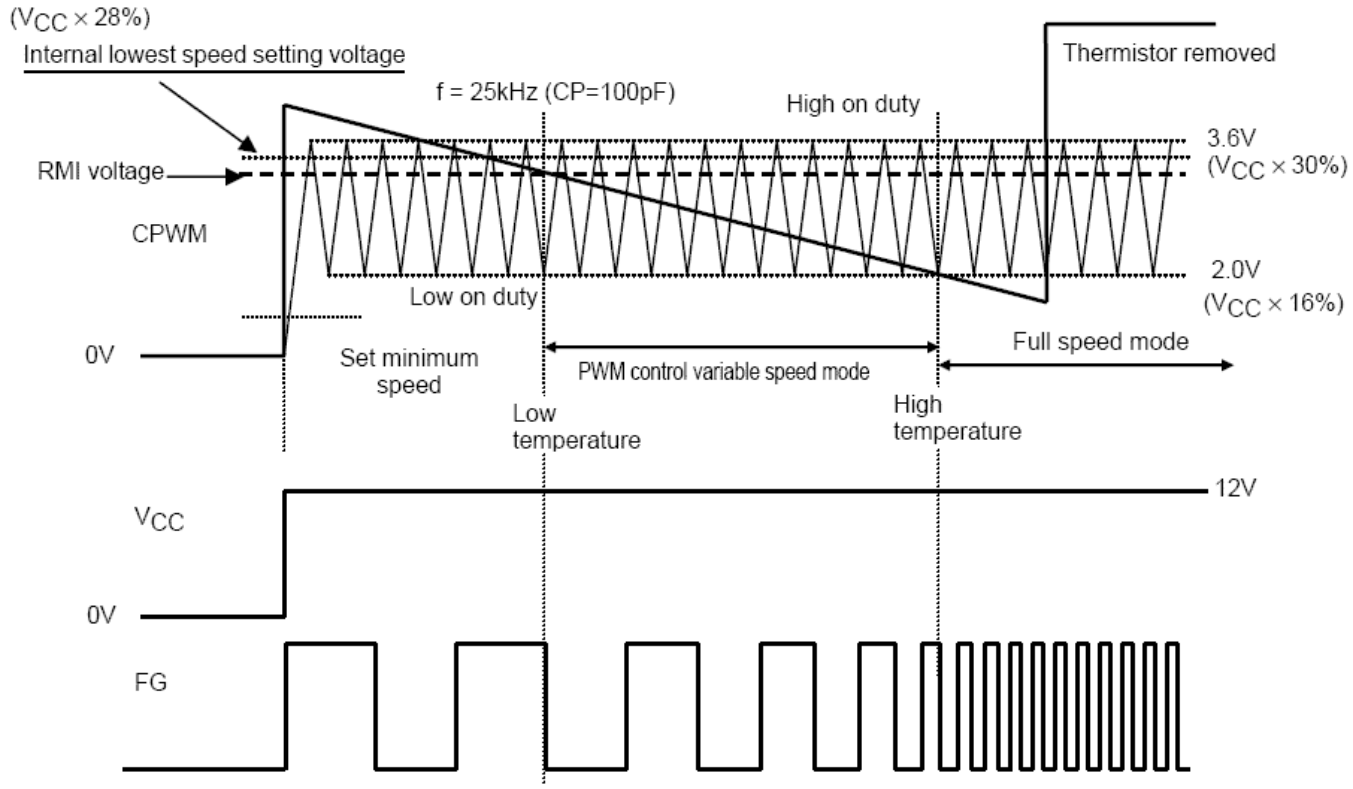

1.Set minimum speed mode

A VTH voltage level is generated when the thermistor detects the set temperature. At low temperatures, the fan motor turns at the lowest speed, which is set with the RMI pin. The LB11961 compares the CPWM oscillator voltage with the RMI pin voltage and sets the duty for the lowest drive state.

2. High speed <->Low speed mode

The PWM signal is controlled by comparing the CPWM oscillation voltage that cycles between 1.2V and 3.8V and the VTH voltage.

When the VTH voltage is lower, the high and low side transistors are turned on, and when the VTH voltage is higher, the high side transistor is turned off and the coil current is regenerated through the low side transistor. Thus the output on duty increases as the VTH voltage becomes lower, the coil current increases, and the motor speed increases.

Rotation speed feedback is provided by the FG output.

3.Full-speed mode

The LB11961 switches to full-speed mode above a certain temperature.

4.Thermistor removed mode

If the thermistor is removed, the VTH input voltage will rise. However, the output will go to full drive at 100% and the motor will run at full speed.