LB11660FV

Monolithic Digital IC

Half-pre Motor Driver Single-Phase Full-Wave, for Fan Motor

ON Semiconductor®

www.onsemi.com

Overview

The LB11660FV is a single-phase bipolar drive half-predriver motor driver that can easily implement a direct PWM driver motor driver circuit with excellent efficiency. The LB11660FV is particularly well suited for the miniature fans used in servers.

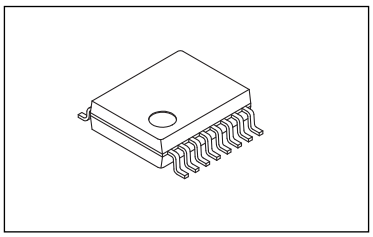

SSOP16 (225mil)

Features

- Single-phase full-wave drive (15V, 1.5A transistors are built in)
  Half predriver with integrated high side transistor
- Built-in variable speed function controlled by an external input
  The LB11660FV can implement quiet, low-vibration variable speed control using externally clocked high side transistor direct PWM drive.
- Minimum speed setting pin
- Current limiter circuit
  (The limit value is determined by Rf; I_O = 1A when RF = 0.5Ω)
- Built-in kickback absorption circuit
- Soft switching circuit makes low current consumption, low loss, and low noise drive possible at phase switching
- Built-in HB
- Built-in lock protection and automatic recovery circuits
  (built-in on/off ratio switching circuit controlled by the supply voltage)
- FG (speed detection) output
- Built-in thermal protection circuit (design guarantee)

ORDERING INFORMATION

See detailed ordering and shipping information on page 10 of this data sheet.

© Semiconductor Components Industries, LLC, 2015

Specifications

Absolute Maximum Ratings at Ta = 25°C

Parameter	Symbol	Conditions	Ratings	Unit
V_{CC} maximum supply voltage	V_{CC} max		20	V
VM maximum supply voltage	VM max		20	V
OUT pin maximum output current	I_{OUT} max	Rf ≥ 0.39Ω	1.5	A
OUT pin output voltage 1	V_{OUT} max 1		20	V
OUT pin output voltage 2	V_{OUT} max 2	T ≤ 0.4μs	26.5	V
PRE pin maximum source current	IPSO max		30	mA
PRE pin maximum sink current	IPSI max		−7	mA
PRE pin output voltage	VP max		20	V
HB maximum output current	HB max		10	mA
VTH input pin voltage	VTH max		7	V
FG output pin voltage	VFG max		18	V
FG output current	IFG max		10	mA
Allowable power dissipation	Pd max	When mounted on a circuit board *1	0.8	W
Operating temperature	Topr	*2	−30 to +90	°C
Storage temperature	Tstg		−55 to +150	°C

*1 Specified circuit board : 114.3 × 76.1 × 1.6mm^3, glass epoxy.

*2: Tj max is 150°C. This device must be used under conditions such that the chip temperature does not exceed Tj = 150°C during operation.

Stresses exceeding those listed in the Maximum Ratings table may damage the device. If any of these limits are exceeded, device functionality should not be assumed, damage may occur and reliability may be affected.

Recommended Operating Conditions at Ta = 25°C

Parameter	Symbol	Conditions	Ratings	Unit
V_{CC} supply voltage	V_{CC}		4 to 15	V
V_M supply voltage	VM		3 to 15	V
Current limiter operation range	ILIM		0.6 to 1.2	V
VTH input level voltage range	VTH		0 to 6	V
Hall sensor input common-mode input voltage range	VICM		0.2 to 3	V

Functional operation above the stresses listed in the Recommended Operating Ranges is not implied. Extended exposure to stresses beyond the Recommended Operating Ranges limits may affect device reliability.

Electrical Characteristics Unless otherwise specified Ta = 25°C, V_{CC} = 12V

Parameter	Symbol	Conditions	Ratings			Unit
			min	typ	max	
Circuit current	$I_{CC}1$	Drive mode		9	12	mA
HB voltage	VHB	IHB = 5mA	1.05	1.25	1.40	V
6VREG voltage	V6VREG	6VREG = 5mA	5.80	6	6.20	V
CT pin high-level voltage	VCTH		3.4	3.6	3.8	V
CT pin low-level voltage	VCTL		1.4	1.6	1.8	V
ICT pin charge current 1	ICTC1	V_{CC} = 12V	1.7	2.2	2.7	μA
ICT pin charge current 2	ICTC2	V_{CC} = 6V	1.3	1.8	2.3	μA
ICT pin discharge current 1	ICTD1	V_{CC} = 12V	0.11	0.15	0.19	μA
ICT pin discharge current 2	ICTD2	V_{CC} = 6V	0.34	0.44	0.54	μA
ICT charge/discharge current ratio 1	RCT1	V_{CC} = 12V	12	15	18	Times
ICT charge/discharge current ratio 2	RCT2	V_{CC} = 6V	3	4	5	Times
ICT charge/discharge ratio threshold voltage	VRCT		6	6.6	7.3	V
VTH bias current	IBVTH		−2	−1	0	μA
OUT output high saturation voltage	V_{OH}	I_O = 200mA, RL = 1Ω		0.6	0.8	V
PRE output low saturation voltage	V_{PL}	I_O = 5mA		0.2	0.4	V
PRE output high saturation voltage	V_{PH}	I_O = −20mA		0.9	1.2	V
Current limiter	VRf	V_{CC} − VM	450	500	550	mV
PWM output pin high-level voltage	VPWMH		2.2	2.5	2.8	V
PWM output pin low-level voltage	VPWML		0.4	0.5	0.7	V
PWM external C charge current	IPWM1		−23	−18	−14	μA
PWM external C discharge current	IPWM2		18	24	30	μA
PWM oscillator frequency	FPWM	C = 200pF	19	23	27	kHz
Hall sensor input sensitivity	VHN	Zero peak value (including offset and hysteresis)		15	25	mV
FG output pin low-level voltage	VFG/RD	IFG/RD = 5mA		0.2	0.3	V
FG output pin leakage current	IFGL/IRDL	VFG/RD = 7V			30	μA
Thermal protection circuit	THD	Design target value*3	150	180	210	°C

*3: This is a design guarantee and is not tested in individual units. The thermal protection circuit is included to prevent any thermal damage to the IC. Since this would imply operation outside the IC's guaranteed temperature range, the application thermal design must be such that the thermal protection circuit will not operate if the fan is operating constantly.

Product parametric performance is indicated in the Electrical Characteristics for the listed test conditions, unless otherwise noted. Product performance may not be indicated by the Electrical Characteristics if operated under different conditions.

Package Dimensions
unit : mm

SSOP16 (225mil)
CASE 565AM
ISSUE A

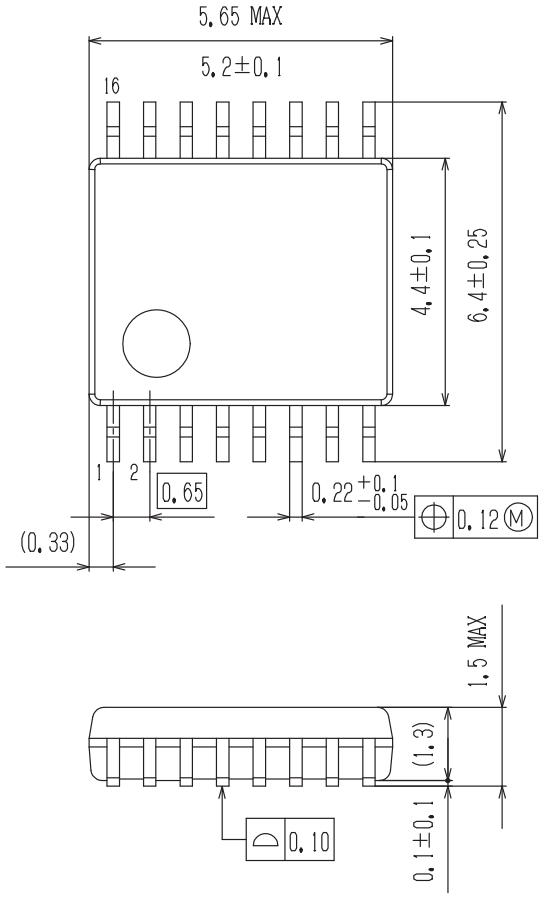

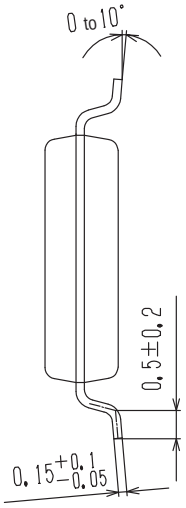

SOLDERING FOOTPRINT*

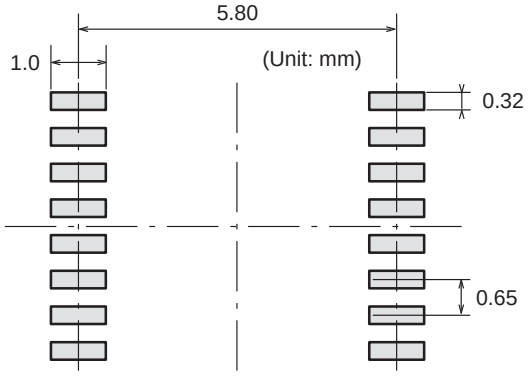

NOTE: The measurements are not to guarantee but for reference only.

*For additional information on our Pb-Free strategy and soldering details, please download the ON Semiconductor Soldering and Mounting Techniques Reference Manual, SOLDERRM/D.

GENERIC MARKING DIAGRAM*

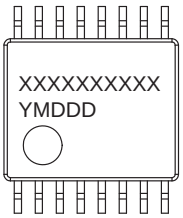

XXXXX = Specific Device Code
Y = Year
M = Month
DDD = Additional Traceability Data

*This information is generic. Please refer to device data sheet for actual part marking. Pb-Free indicator, “G” or microdot “▪”, may or may not be present.

Pin Assignment

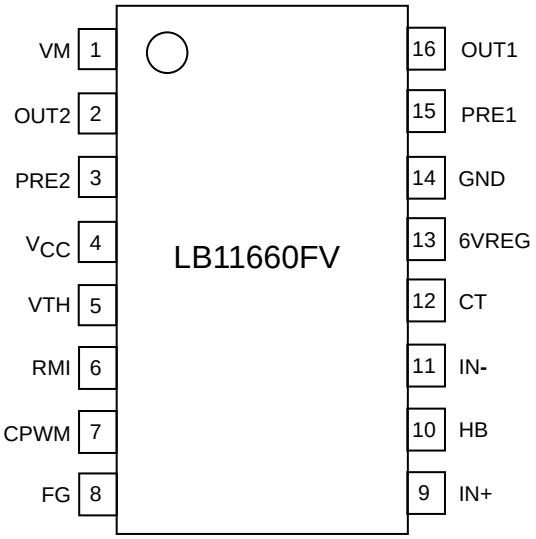

Top view

Truth Table

IN-	IN+	VTH	CPWM	CT	OUT1	OUT2	PRE1	PRE2	FG	Mode
High	Low	Low	High	Low	High	Off	Low	High	Low	During rotation – drive
Low	High				Off	High	High	Low	Off	
High	Low	High	Low		Off	Off	Low	High	Low	During rotation – regeneration
Low	High				Off	Off	High	Low	Off	
High	Low	-	-	High	Off	Off	Low	High	Low	Lock protection
Low	High				Off	Off	High	Low	Off	

CPWM – High is the state where CPWM > VTH, and CPWM– Low is the state where CPWM < VTH.

Application Circuit Example 1

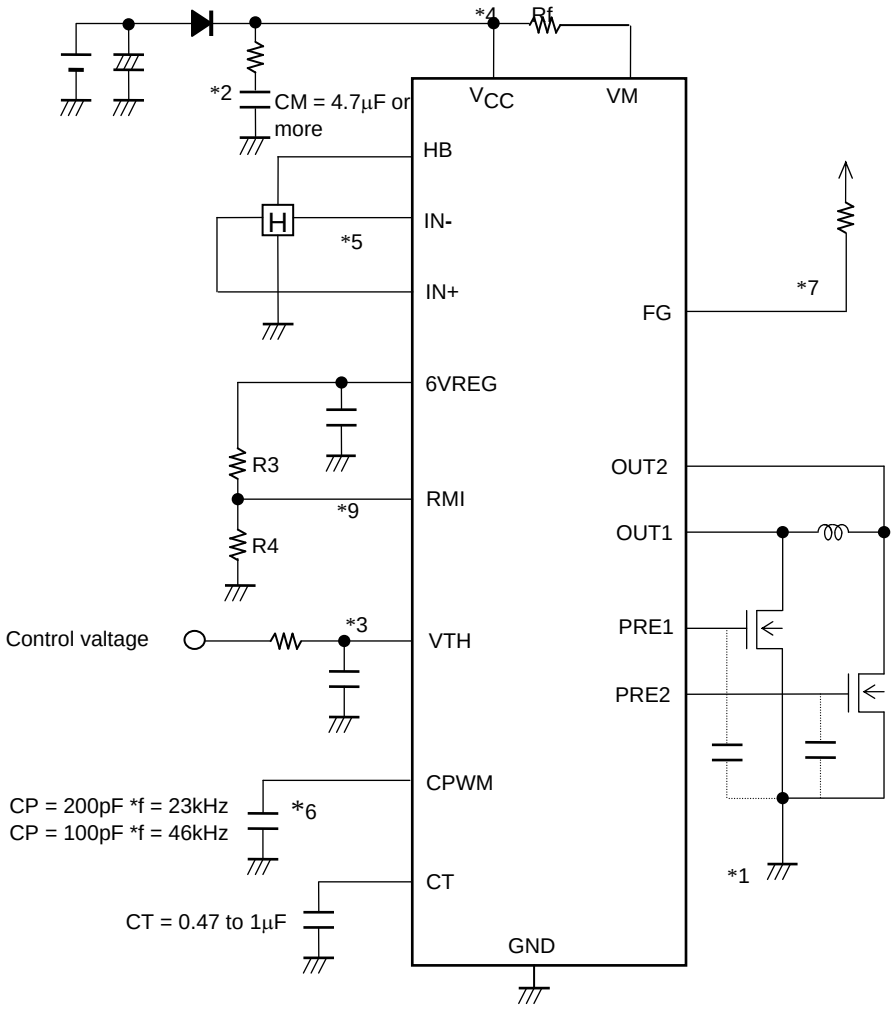

*1. **Power supply and ground lines**

The IC ground is the control current power supply system ground, and the external n-channel transistor ground is the motor power supply system ground.

These two systems should be formed from separate lines and the control system external components should be connected to the IC ground.

*2. **Regeneration power supply stabilization capacitor**

Use a 4.7μF/25V capacitor at least for CM, which is the power supply stabilization capacitor for both PWM drive and kickback absorption.

The capacitor CM must be connected to prevent destruction of the IC when power is applied or removed.

*3. **Speed Control**

(1) Control voltage

The PWM duty is determined by comparing the VTH pin voltage with the PWM oscillator waveform.

When the VTH voltage falls, the on duty increases and when the VTH voltage falls below the PWM output low level, the duty will go to 100%.

(2) Thermistor

For thermistor applications, normally the 6VREG level will be resistor divided and the divided level input to the VTH pin.

The PWM duty is changed by changes in the VTH pin voltage due to changes in temperature.

*4. **Current limiter setting**

The current limiter circuit operates if the voltage across the resistor between V_{CC} and the VM pin exceeds 0.5V.

Since the current limiter circuit applies limitation at a current determined by I_O = VRf/Rf (where VRf = 0.5V (typical), Rf: resistance of the current detection resistor), the current limiter will operate at I_O = 1A when Rf = 0.5Ω.

The resistor RF must be connected in the circuit and it must have a value such that the circuit operates within the recommended current limiter operating range.

*5. **Hall sensor input**

Lines that are as short as possible must be used to prevent noise from entering the system. The Hall sensor input circuit consists of a comparator with hysteresis (20mV). We recommend that the Hall sensor input level be at least three times this hysteresis, i.e. at least 60mVp-p.

*6. **PWM oscillator frequency setting capacitor**

The PWM oscillator oscillates at f = 23kHz when CP is 200pF and at f = 46kHz when CP is 100pF, and this frequency becomes the PWM reference frequency.

Note that the PWM frequency is given approximately by the following equation.

f [kHz] ≈ $(4.6\times10^{6}) \div C$ [pF]

*7. **FG output**

This is an open collector output, and a rotation count detection function can be implemented using this FG output, which corresponds to the phase switching. This pin must be left open if unused.

*8. **HB pin**

This pin provides a Hall effect sensor bias constant-voltage output of 1.25V.

*9. **RMI pin**

This pin is the speed control minimum speed setting.

The minimum output duty is set by R3 and R4. Leave R4 open to have the motor stop when the duty is 0%.

Rotation Control Timing Chart

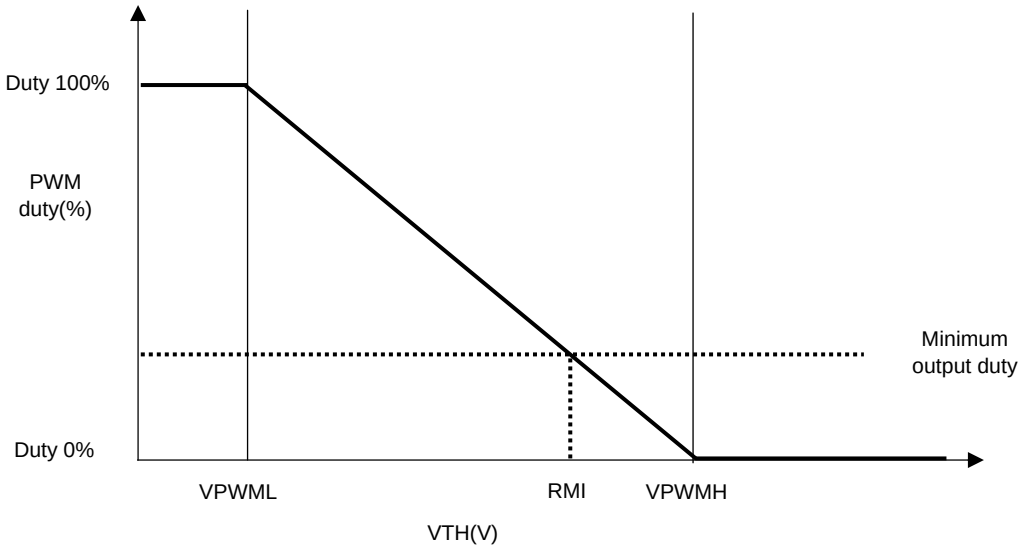

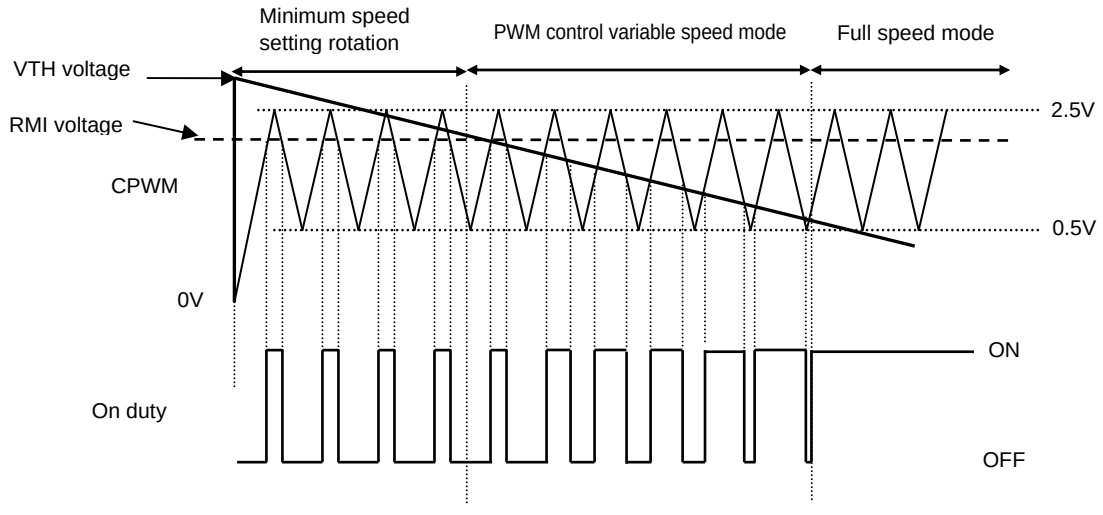

Application Circuit Example 2

Mounting circuit board (Component values are provided for reference purposes)

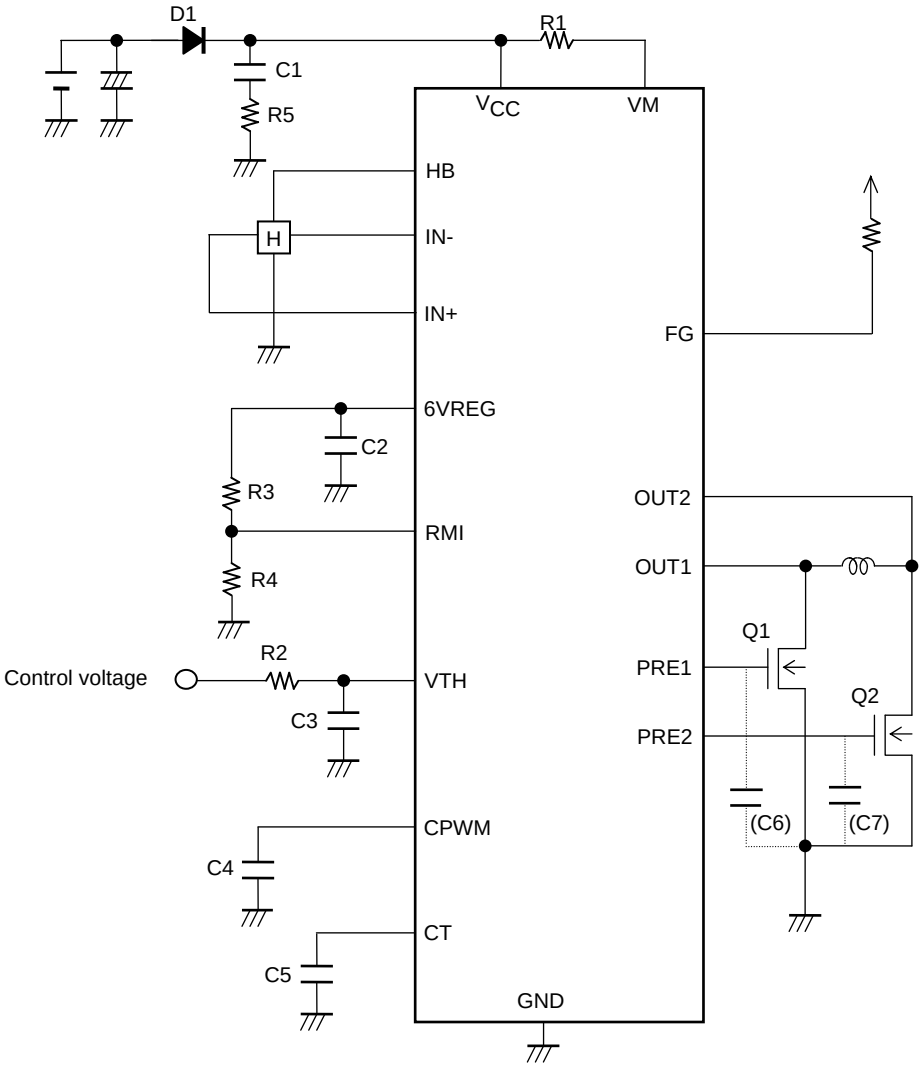

Parts List

D1 : SBM30-03-Tr (Our product)
Q1, 2 : CPH3418 (Our product)
R1 : 0.51Ω size 3225
R2 : 15kΩ size 1608
R3 : 39kΩ size 1608
R4 : 20kΩ size 1608
R5 : 2.2Ω size 1608
C1 : 4.7μF/25V size 3216
C2 : 2.2μF size 1608
C3 : 2.2μF size 1608
C4 : 220pF size 1005
C5 : 0.47μF size 1608
C6, 7 : No connection

Application Circuit Example 3

No minimum speed setting, thermistor input used

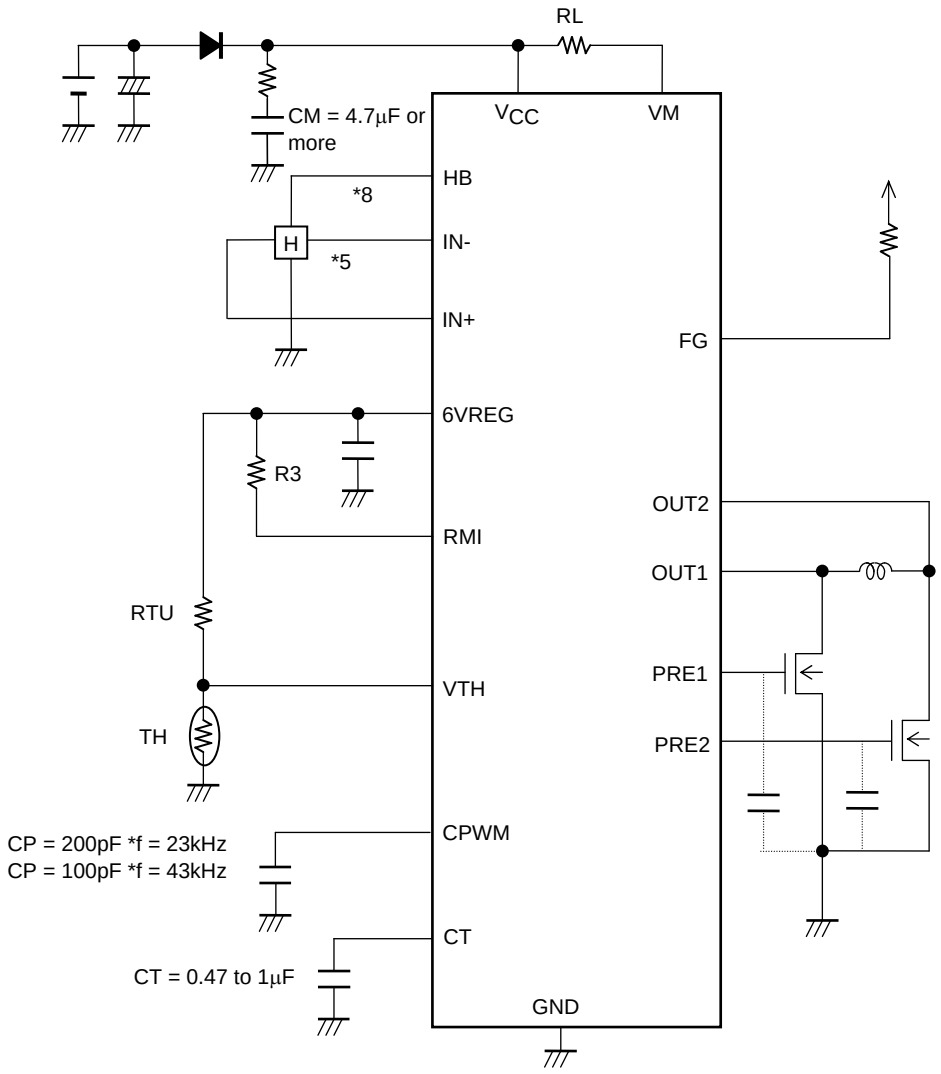

Internal Equivalent Circuit Diagram

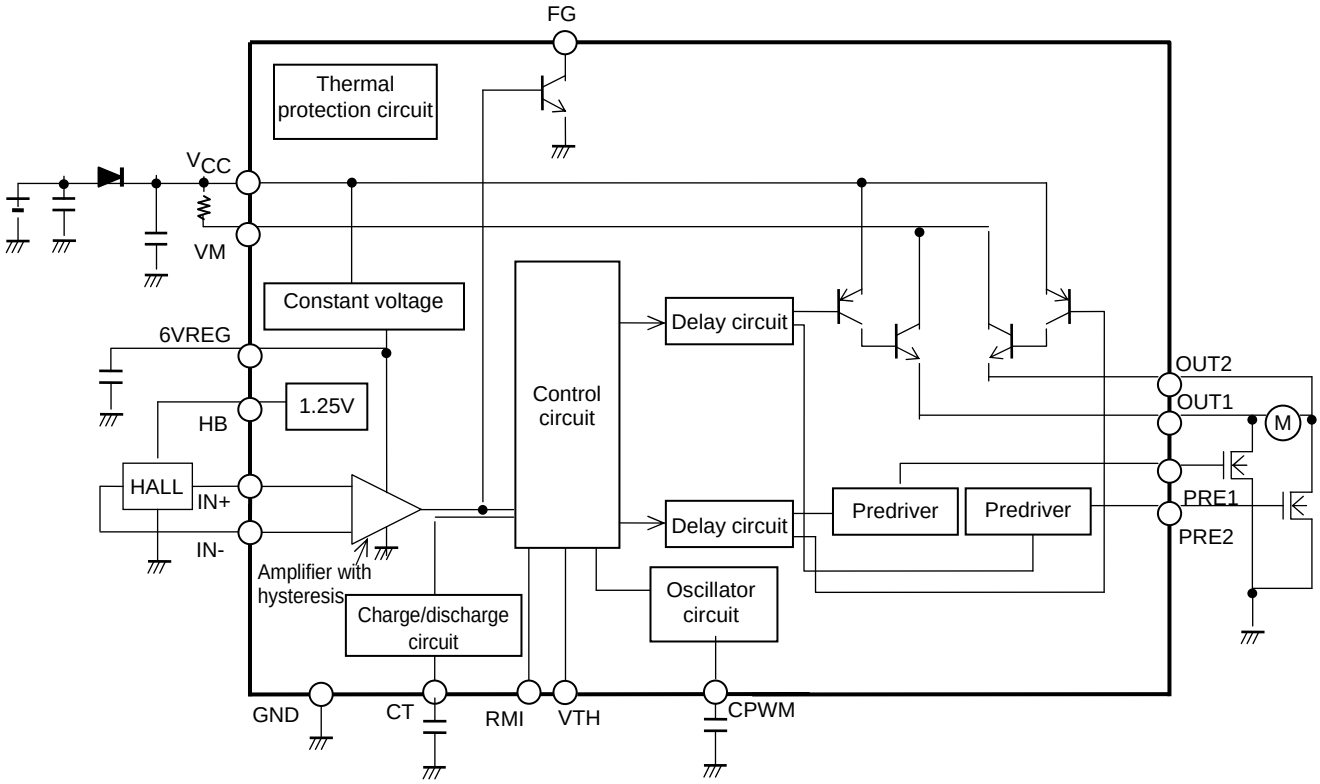

ORDERING INFORMATION

Device	Package	Wire Bond	Shipping (Qty / Packing)
LB11660FV-MPB-H	SSOP16 (225mil) (Pb-Free / Halogen Free)	Au-Wire	90 / Fan-Fold
LB11660FV-TLM-H	SSOP16 (225mil) (Pb-Free / Halogen Free)	Au-Wire	2000 / Tape & Reel
LB11660FV-W-AH	SSOP16 (225mil) (Pb-Free / Halogen Free)	Cu-Wire	2000 / Tape & Reel

† For information on tape and reel specifications, including part orientation and tape sizes, please refer to our Tape and Reel Packaging Specifications Brochure, BRD8011/D. http://www.onsemi.com/pub_link/Collateral/BRD8011-D.PDF

ON Semiconductor and the ON logo are registered trademarks of Semiconductor Components Industries, LLC (SCILLC) or its subsidiaries in the United States and/or other countries. SCILLC owns the rights to a number of patents, trademarks, copyrights, trade secrets, and other intellectual property. A listing of SCILLC's product/patent coverage may be accessed at www.onsemi.com/site/pdf/Patent-Marking.pdf. SCILLC reserves the right to make changes without further notice to any products herein. SCILLC makes no warranty, representation or guarantee regarding the suitability of its products for any particular purpose, nor does SCILLC assume any liability arising out of the application or use of any product or circuit, and specifically disclaims any and all liability, including without limitation special, consequential or incidental damages. "Typical" parameters which may be provided in SCILLC data sheets and/or specifications can and do vary in different applications and actual performance may vary over time. All operating parameters, including "Typicals" must be validated for each customer application by customer's technical experts. SCILLC does not convey any license under its patent rights nor the rights of others. SCILLC products are not designed, intended, or authorized for use as components in systems intended for surgical implant into the body, or other applications intended to support or sustain life, or for any other application in which the failure of the SCILLC product could create a situation where personal injury or death may occur. Should Buyer purchase or use SCILLC products for any such unintended or unauthorized application, Buyer shall indemnify and hold SCILLC and its officers, employees, subsidiaries, affiliates, and distributors harmless against all claims, costs, damages, and expenses, and reasonable attorney fees arising out of, directly or indirectly, any claim of personal injury or death associated with such unintended or unauthorized use, even if such claim alleges that SCILLC was negligent regarding the design or manufacture of the part. SCILLC is an Equal Opportunity/Affirmative Action Employer. This literature is subject to all applicable copyright laws and is not for resale in any manner.