8 AMP SWITCHING REGULATORS

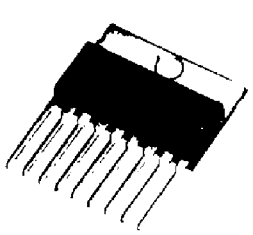

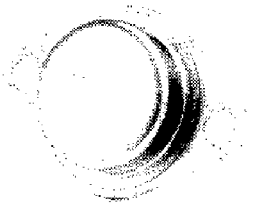

FEATURES

- Mil-Temperature Performance
- DC to 100 kHz operation
- Adjustable output voltage
- Cycle-by-cycle current limit
- Internal thermal shutdown
- Inhibit/enable control pin

DESCRIPTION

The LAS-6380/LAS-6480 Series are monolithic integrated circuits designed for fixed frequency, pulse width modulated, switching converter applications such as step-down, step-up, flyback, forward, Cŭk and voltage inverting DC-to-DC converters and motor controls. The LAS-6380/LAS-6480 Series includes a temperature compensated voltage reference, sawtooth oscillator with over-current frequency shift, linear trailing edge pulse width modulator with double pulse suppression logic, transconductance error amplifier, and an 8 amp Darlington output transistor with internal current limit protection.

The LAS-6380/LAS-6480 can be used in step-down or step-up applications. The LAS-6381/LAS-6481 are for step-down applications where current limit adjustment is necessary. The LAS-6380/LAS-6480 Series is available in TO-3 steel packages for true hermetic seal and board insertable plastic SIP packages.

Full military temperature range is available for LAS-6480/LAS-6481 TO-3 models.

ABSOLUTE MAXIMUM RATINGS

PARAMETER	SYMBOL	MAXIMUM	UNITS
Control Circuit/ Output Collector Voltage LAS-6380/81 LAS-6480/81	V_{CC}/C_O C_O	 35 40	Volts
Power Dissipation	P_D	Internally Limited	Watts
Thermal Resistance Junction to Case TO-3 SIP	θ_{JC}	 1.5 0.8	°C/W
Operating Junction Temperature Range TO-3 LAS-6480/81 SIP TO-3 LAS-6380/81	T_J	 −55 to 150 −25 to 125 −25 to 125	°C
Storage Temperature Range	T_{STG}	−65 to 150	°C
Lead Temperature (Soldering) 60 sec for TO-3 10 sec for SIP	T_{LEAD}	 300 260	°C

DEVICE SELECTION GUIDE

DEVICE	V_{IN} MAX	V_{OUT} MAX	CURRENT LIMIT	PACKAGE
LAS-6380	35	27	Fixed	TO-3
LAS-6380P$_1$	35	27	Fixed	Plastic SIP
LAS-6381	35	27	Adjustable	TO-3
LAS-6381P$_1$	35	27	Adjustable	Plastic SIP
LAS-6480	40	31	Fixed	TO-3
LAS-6480P	40	31	Fixed	Plastic SIP
LAS-6481	40	31	Adjustable	TO-3
LAS-6481P	40	31	Adjustable	Plastic SIP

BLOCK DIAGRAM

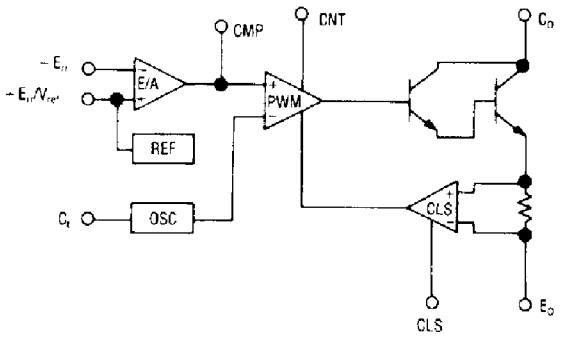

ELECTRICAL CHARACTERISTICS[1]

Test conditions are as follows: V_{CC} = 24V, V_O = 5V, I_O = 8A, C_t = 0.0056μF, T_J = 25°C, unless otherwise specified. F_{SX} = 55KHz.

Parameter	Symbol	Test Conditions			Test Limits			Units
		V_{CC}	I_O	T_J[2]	Minimum	Typical	Maximum	
REFERENCE SECTION								
Reference Voltage[1]	V_{REF}				2.137	2.25	2.363	Volts
LAS-6300		12 to V_{IN} (max)	0.8A to 8A	Over Temp	2.10		2.43	Volts
LAS-6400					2.08		2.45	
Load Regulation[1]	$REG_{(LOAD)}$		0.8A to 8A			0.4	1.0	$\%V_{REF}$
Line Regulation[1]	$REG_{(LINE)}$	12V to V_{IN} (max)				0.9	1.0	$\%V_{REF}$
Temperature Coefficient	T_C			Over Temp		0.01		%/°C
OSCILLATOR SECTION								
Initial Frequency Accuracy	F_{SX}				−33	±10	+33	%
Line Regulation of Frequency[1]	$REG_{(LINE)}$	12 to V_{IN} (max)				0.12	2.7	$\%F_{SX}$
Frequency Temperature Coefficient	T_C			Over Temp		0.05		%/°C
Sawtooth Duty Cycle	d.c.					85		%
ERROR AMPLIFIER SECTION								
Input Offset						±5		mV
Transconductance						2.7		mA/V
Output Sink/Source Current						0.26		mA
Input Common Mode Range					1.5		3.0	Volts
Open Loop Voltage Gain					50	60		dB
OUTPUT SECTION								
Peak Current Limit Knee	I_P			Over Temp	8.8			Amps
Short Circuit Current Limit	I_{SC}					14		Amps
Output Saturation Voltage	V_O (sat)	$C_O = V_{CC}$	4A			1.6		Volts
		$C_O = V_{CC}$	8A			2.1	2.3	Volts
		E_O = GND	4A			0.9		Volts
		E_O = GND	8A			1.4	1.8	Volts
Efficiency[3]	η				70	79		%
				Over Temp	65			%
Current Rise Time[3]	t_R	Inductive Load				50	100	nS
Current Fall Time[3]	t_F	Inductive Load				700	900	nS
CONTROL PIN								
Output Inhibit					0.64	0.75	1.06	Volts
Quiescent Current	I_Q	Output E_O Off				18		mA
		Output E_O On					30	mA

[1] Low Duty cycle Pulse Testing with Kelvin Connections required. Die temperature changes must be accounted for separately.

[2] Over Temperature, T_J = −25°C to 125°C for LAS-6300 TO-3, SIP; LAS-6400 SIP, and −55°C to 150°C for LAS-6400 TO-3

[3] Per Test Circuit

8 AMP SWITCHING REGULATORS

OPERATIONAL DATA

POWER DERATING

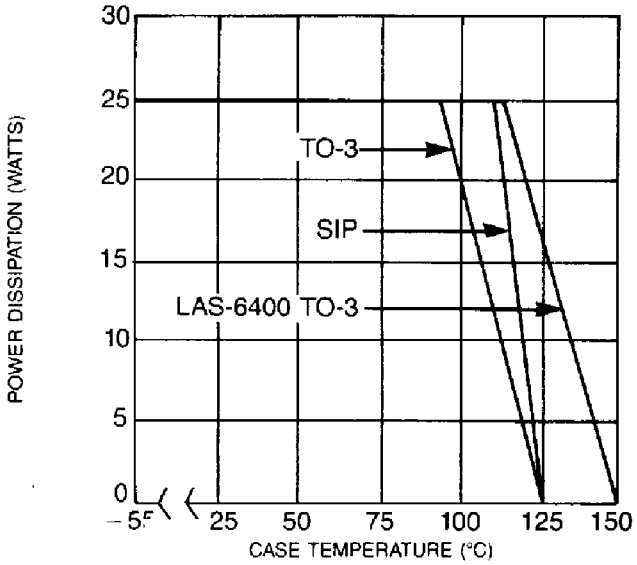

PERCENT V_{OUT} VS OUTPUT CURRENT LIMIT

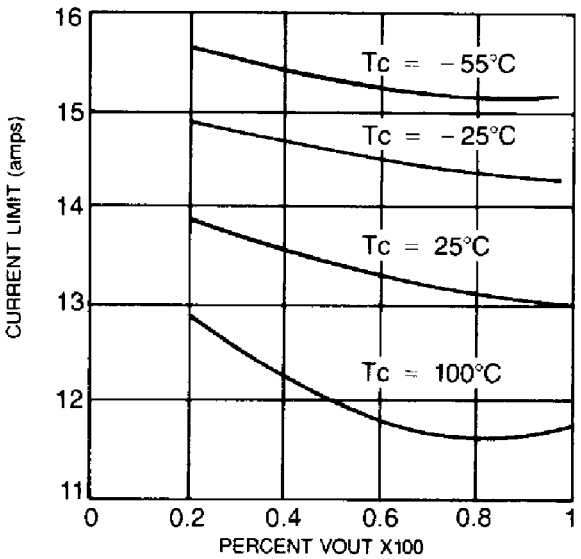

POWER DISSIPATION VS INPUT VOLTAGE

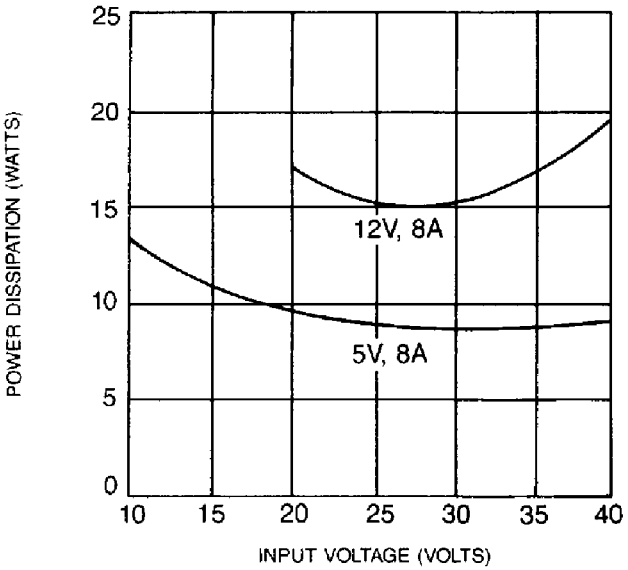

FREQUENCY VS TIMING CAPACITANCE

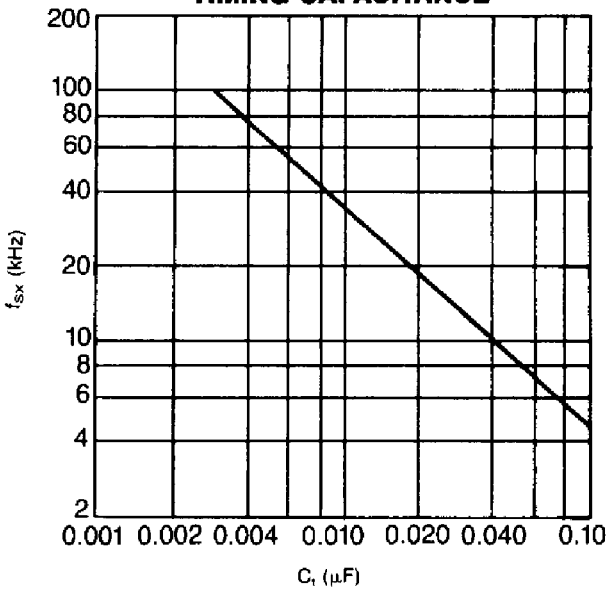

EFFICIENCY VS INPUT VOLTAGE

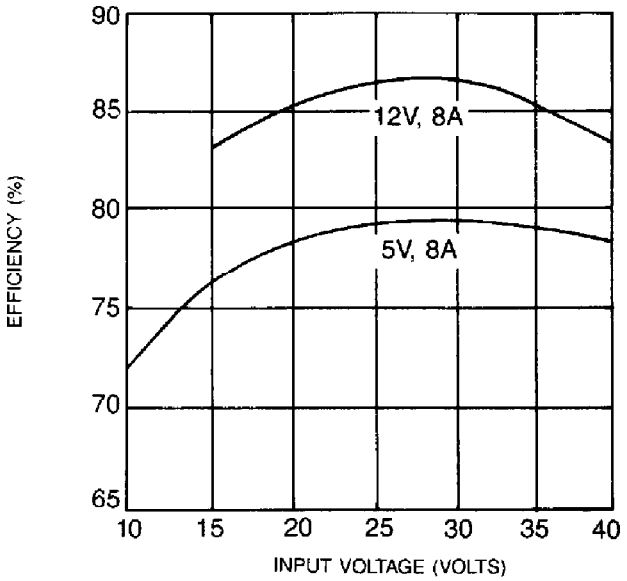

ERROR AMPLIFIER OPEN LOOP GAIN

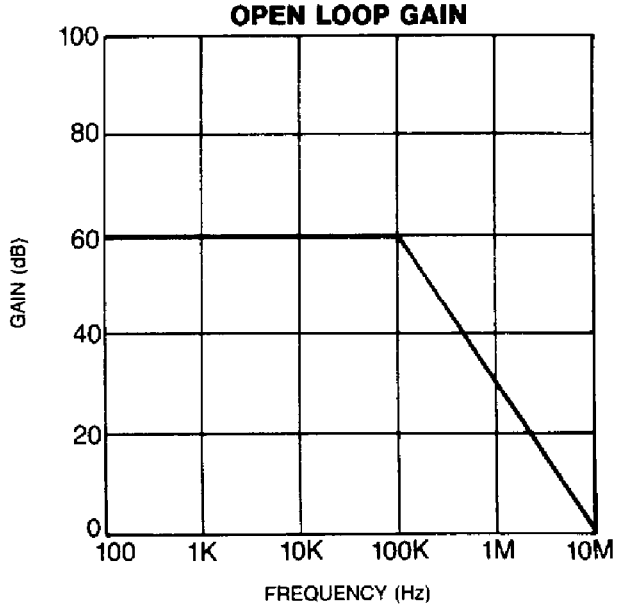

8 AMP SWITCHING REGULATORS

TYPICAL APPLICATIONS

DC-TO-DC STEP-DOWN CONVERTER

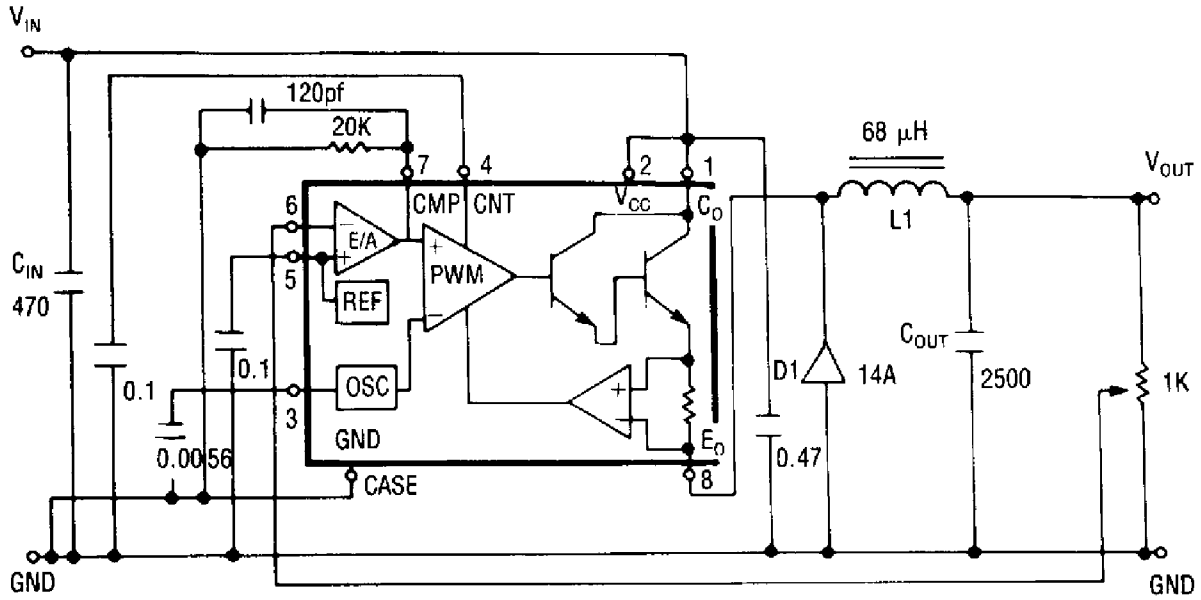

V_{IN} = 24V
V_{OUT} = 5V @ 8A

DC-TO-DC STEP-UP CONVERTER

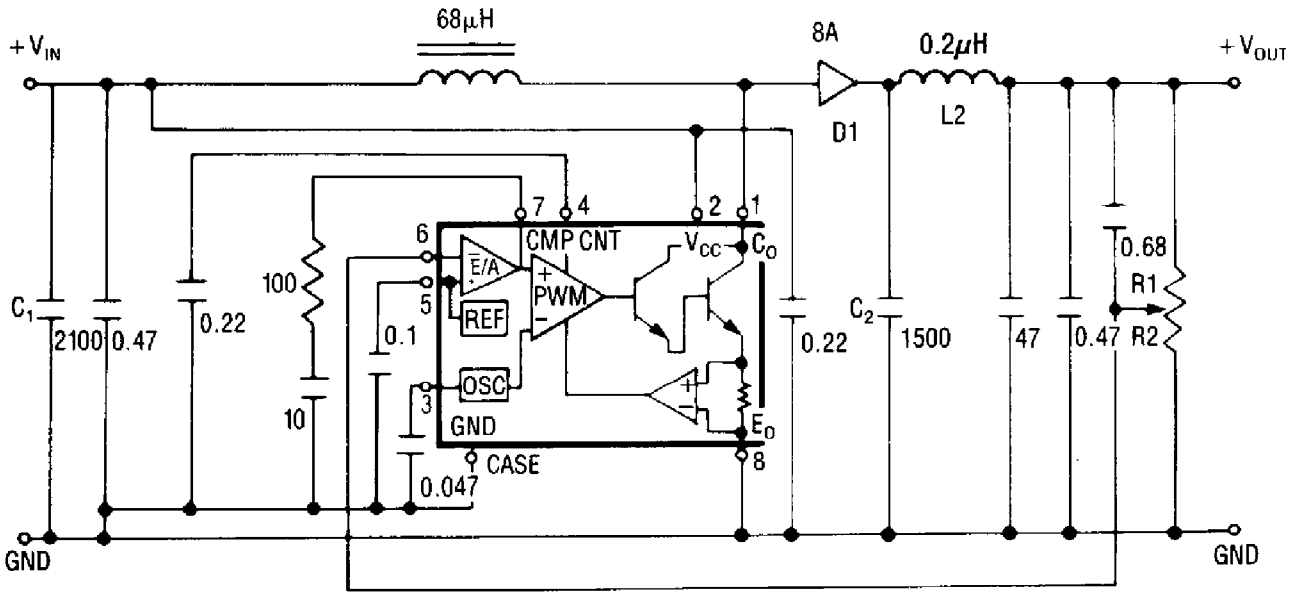

V_{IN} = 12V
V_{OUT} = 24V @ 2.5A

8 AMP SWITCHING REGULATORS

DEVICE OUTLINE

LAS-6X80, 6X81

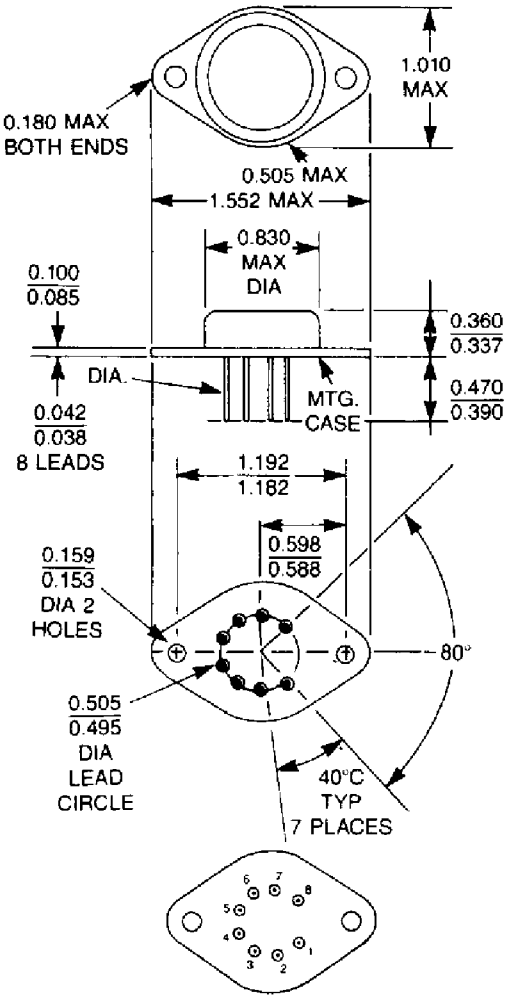

Bottom View

LAS-6X80P, 6X81P

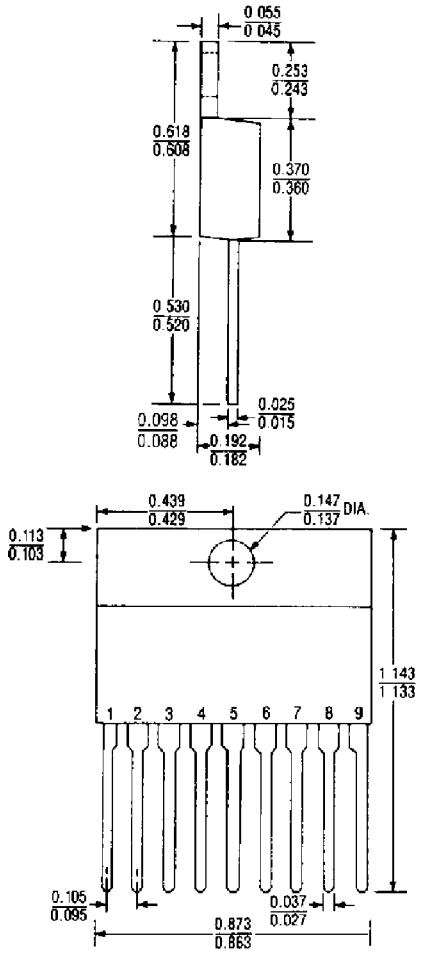

Front View

LAS-6X80

1 – C_O
2 – V_{CC}
3 – C_t
4 – CNT
5 – V_{REF}
6 – $E_{rr}(-)$
7 – CMP
8 – E_O
Case is Ground

LAS-6X81

1 – C_O/V_{CC}
2 – C_t
3 – CNT
4 – V_{REF}
5 – $E_{rr}(-)$
6 – CMP
7 – CLS
8 – E_O
Case is Ground

LAS-6X80P

1 – C_O
2 – V_{CC}
3 – C_t
4 – CNT
5 – GND
6 – V_{REF}
7 – $E_{rr}(-)$
8 – CMP
9 – E_O
Tab is Ground

LAS-6X81P

1 – C_O/V_{CC}
2 – C_t
3 – CNT
4 – V_{REF}
5 – GND
6 – $E_{rr}(-)$
7 – CMP
8 – CLS
9 – E_O
Tab is Ground

NOTE: All dimensions are in inches.