Wall Industries, Inc.

LANC8UW Ultra Wide Series
Single and Dual Output
8 Watt DC/DC Converter
4:1 Ultra Wide Input Voltage

FEATURES
- 8 Watts Output Power
- High Efficiency up to 88%
- Output Current up to 2.4A
- Five-Sided Continuous Shield
- 4:1 Ultra Wide Input Voltage Range
- Fixed Switching Frequency (300KHz)
- Standard 1.25 x 0.8 x 0.4 Inch Package
- ISO9001 Certified Manufacturing Facilities
- Compliant to RoHS EU Directive 2002/95/EC
- Standard 24 Pin DIP Package & SMT Type Package

APPLICATIONS
- Measurement
- Wireless Network
- Telecom/Datacom
- Industry Control System
- Semiconductor Equipment



SPECIFICATIONS: *LANC8UW Ultra Wide Series*

All specifications apply @ 25°C ambient unless otherwise noted

INPUT SPECIFICATIONS

Input Voltage Range	24V nominal input	9-36VDC
	48V nominal input	18-75VDC
Input Filter		Pi Type
Input Voltage Variation	dv/dt	5V/ms max
		Complies with ETS300 132 part 4.4)
Input Surge Voltage (100ms max)	24V input	50VDC
	48V input	100VDC
Input Reflected Ripple Current (nominal Vin and full load)		20mAp-p
Start Up Time (nominal Vin and constant resistive load)		450ms typ.
Start Up Voltage	24V	9VDC
	48V	18VDC
Shutdown Voltage	24V	8VDC
	48V	16VDC
Remote ON/OFF (See Note 6)		
	DC-DC ON	Open or 3.5V < Vr < 12V
	DC-DC OFF	Short or 0V < Vr < 1.2V
Input Current of Remote Control Pin (nominal Vin)		-0.5mA ~ +0.5mA
Remote Off State Input Current (nominal Vin)		2.5mA

OUTPUT SPECIFICATIONS

Output Voltage		see table
Voltage Accuracy (nominal Vin and full load)		±1%
Output Current		see table
Output Power		8 watts max.
Line Regulation (LL to HL at FL)		±0.2%
Load Regulation (no load to full load)	Single Output (DIP)	±0.5%
	Single Output (SMT)	±1%
	Dual Output (SMT, DIP)	±1%
Cross Regulation (Dual) (Asymmetrical load 25% / 100% FL)		±5%
Minimum Load		0%
Ripple/Noise (20 MHz BW)		50mVp-p
Temperature Coefficient		±0.02% / °C max.
Transient Response Recovery Time (25% load step)		250us

PROTECTION SPECIFICATIONS

Over Voltage Protection (single output)	3.3V Output	3.9V
	5.0V Output	6.2V
	12V Output	15V
	15V Output	18V
Over Load Protection (% of full load at nominal input)		150% typ.
Short Circuit Protection		Continuous, automatic recovery

GENERAL SPECIFICATIONS

Efficiency		see table
Switching Frequency		300KHz typ.
Isolation Voltage		
	Input to Output	1600VDC min.
	Input (Output) to Case (DIP)	1600VDC min.
	Input (Output) to Case (SMT)	1000VDC min.
Isolation Resistance		10^9 ohms min.
Isolation Capacitance		1500pF max.

ENVIRONMENTAL SPECIFICATIONS

Operating Temperature		
Vo = 5V, 12V, 15V, ±12V, ±15V		-40°C to +81°C (w/o derating)
		+81°C to 105°C (w/ derating)
Vo = 3.3, ±5V		-40°C to +74°C (w/o derating)
		+74° to +105°C (w/ derating)
Storage Temperature		-55°C ~ +125°C
Maximum Case Temperature		105°C
Relative Humidity (non-condensing)		5% to 95% RH
Thermal Impedance (Natural Convection)		20°C / Watt
Thermal Shock		MIL-STD-810D
Vibration		10~55Hz, 10G, 30 minutes along X, Y, and Z
MTBF (See Note 1)	BELLCORE-TR-NWT-000332	2.35 x 10^6 hrs
	MIL-STD-217F	1.078 x 10^6 hrs

PHYSICAL SPECIFICATIONS

Weight	18g (0.63 oz)
Dimensions	1.25 x 0.80 x 0.40 inches (31.8 x 20.3 x 10.2 mm)
Case Material	Nickel-coated copper
Base Material	Non-conductive black plastic
Potting material	Epoxy (UL94-V0)
Shielding	five – sided

Due to advances in technology, specifications subject to change without notice

Wall Industries, Inc. 5 Watson Brook Road Exeter, NH 03833
603-778-2300 www.wallindustries.com Fax 603-778-9797

Wall Industries, Inc.

LANC8UW Ultra Wide Series
Single and Dual Output
8 Watt DC/DC Converter
4:1 Ultra Wide Input Voltage

SAFETY & EMC

Approvals and Standards..... IEC60950-1, UL60950-1, EN60950-1

EMI (See Note 7) ..... EN55022..... Class A

ESD..... EN61000-4-2..... Air ± 8KV, Contact ± 6KV ……Perf. Criteria B

Radiated Immunity..... EN61000-4-3……10V/m Perf. Criteria A

Fast Transient..... EN61000-4-4 ..... ±2KV Perf. Criteria B

Surge (See Note 8)..... EN61000-4-5……±1KV Perf. Criteria B

Conducted Immunity…… EN61000-4-6……10 Vrms Perf. Criteria A

OUTPUT VOLTAGE / CURRENT RATING CHART

Model Number	Input Range	Output Voltage	Output Current		Output (2) Ripple & Noise	Input Current		Efficiency (4)	Capacitor(5) Load max
			Min. load	Full load		No load (3)	Full load (2)		
LANC2433UW8	24VDC (9 - 36 VDC)	3.3 VDC	0mA	2400mA	50mVp-p	40mA	407mA	85%	1330uF
LANC2405UW8		5 VDC	0mA	1600mA	50mVp-p	40mA	402mA	87%	1330uF
LANC2412UW8		12 VDC	0mA	666mA	50mVp-p	25mA	407mA	86%	288uF
LANC2415UW8		15 VDC	0mA	533mA	50mVp-p	25mA	407mA	86%	200uF
LANC2405DUW8		±5 VDC	0mA	±800mA	50mVp-p	20mA	417mA	84%	±900uF
LANC2412DUW8		±12 VDC	0mA	±333mA	50mVp-p	25mA	407mA	86%	±133uF
LANC2415DUW8		±15 VDC	0mA	±267mA	50mVp-p	25mA	407mA	86%	±90uF
LANC4833UW8	48VDC (18 - 75 VDC)	3.3 VDC	0mA	2400mA	50mVp-p	20mA	204mA	85%	1330uF
LANC4805UW8		5 VDC	0mA	1600mA	50mVp-p	20mA	201mA	87%	1330uF
LANC4812UW8		12 VDC	0mA	666mA	50mVp-p	13mA	201mA	87%	288uF
LANC4815UW8		15 VDC	0mA	533mA	50mVp-p	13mA	198mA	88%	200uF
LANC4805DUW8		±5 VDC	0mA	±800mA	50mVp-p	10mA	208mA	84%	±900uF
LANC4812DUW8		±12 VDC	0mA	±333mA	50mVp-p	13mA	201mA	87%	±133uF
LANC4815DUW8		±15 VDC	0mA	±267mA	50mVp-p	13mA	201mA	87%	±90uF

NOTES

1. BELLCORE TR-NWT-000332. Case I: 50% Stress, Temperature at 40ºC. (Ground fixed and controlled environment) MIL-STD-217F Notice2 @Ta=25 ºC, Full load (Ground, Benign, controlled environment)
2. Maximum value at nominal input voltage and full load.
3. Typical value at nominal input voltage and no load.
4. Typical value at nominal input voltage and full load.
5. Test by minimum Vin and constant resistive load.
6. The ON/OFF control pin voltage is referenced to -Vin.
7. The LANC8UW Series can meet EN55022 Class A with an external capacitor in parallel with the input pins.
   Recommend: 24Vin: 1µF/50V
   48Vin: 0.47µF/100V
8. An external filter capacitor is required if the module has to meet EN61000-4-5. The filter capacitor Wall Industries suggests: Nippon chemi-con KY Series, 220uF/100V, ESR 48mΩ.

DERATING CURVE & EFFICIENCY GRAPHS

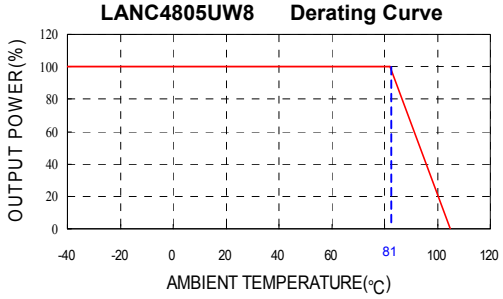

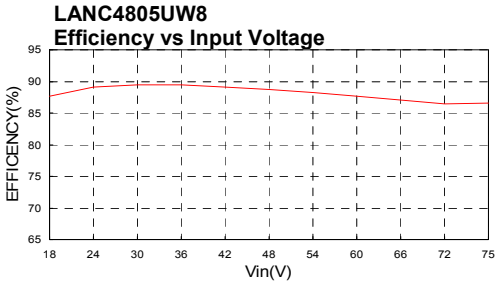

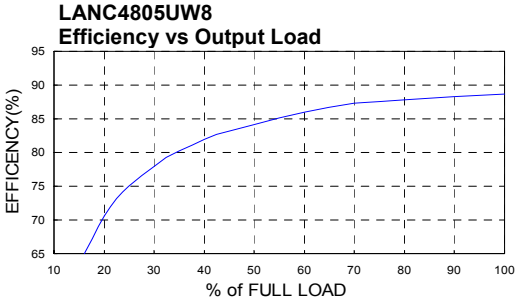

Wall Industries, Inc. 5 Watson Brook Road Exeter, NH 03833
603-778-2300 www.wallindustries.com Fax 603-778-9797

MECHANICAL DRAWING

1. All dimensions are in inches (mm)
   Tolerance: X.XX±0.02 (X.X±0.5)
   X.XXX±0.01 (X.XX±0.25)
2. Pin pitch tolerance ±0.01 (0.25)

DIP TYPE

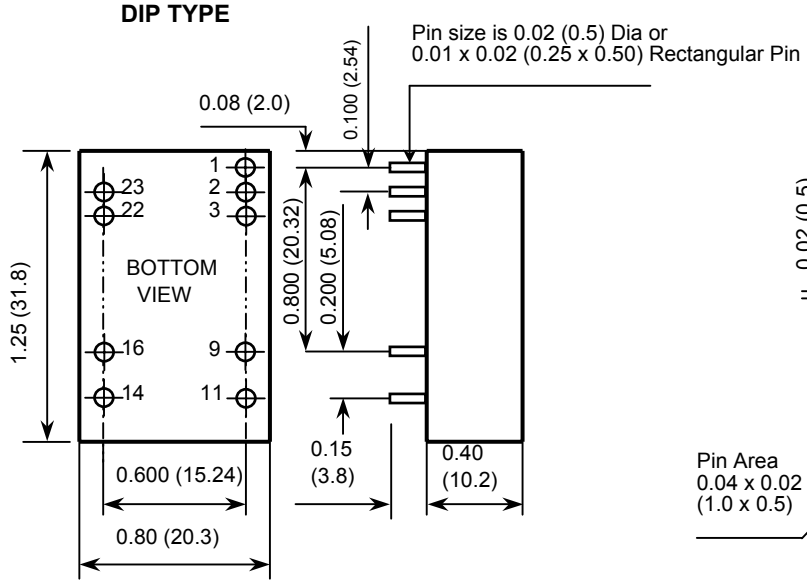

SMT TYPE
(add suffix "S")

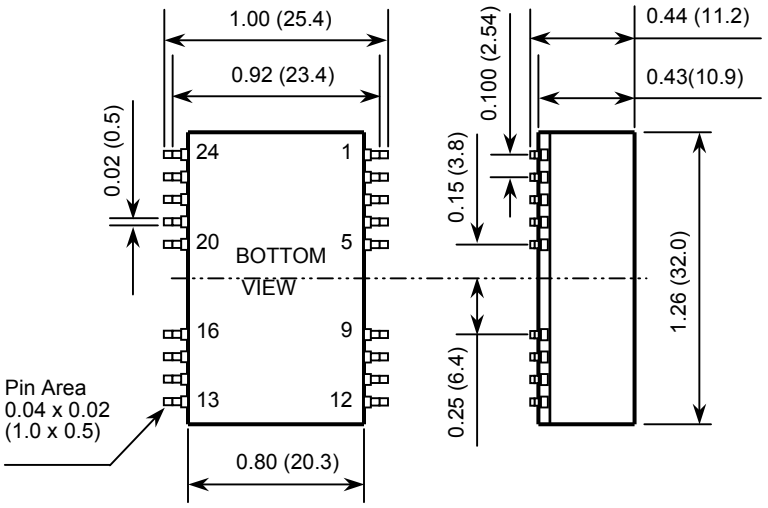

(DIP) PIN CONNECTION					
PIN	SINGLE	DUAL	PIN	SINGLE	DUAL
1	CTRL	CTRL			
2	-INPUT	-INPUT	23	+INPUT	+INPUT
3	-INPUT	-INPUT	22	+INPUT	+INPUT
9	NC	COMMON	16	-OUTPUT	COMMON
11	NC	-OUTPUT	14	+OUTPUT	+OUTPUT

(SMT) PIN CONNECTION					
PIN	SINGLE	DUAL	PIN	SINGLE	DUAL
1	CTRL	CTRL			
2	-INPUT	-INPUT	23	+INPUT	+INPUT
3	-INPUT	-INPUT	22	+INPUT	+INPUT
9	NC	COMMON	16	-OUTPUT	COMMON
11	NC	-OUTPUT	14	+OUTPUT	+OUTPUT
Others	NC	NC	Others	NC	NC

FIGURE 1

Recommended Filter for EN55022 Class B Compliance

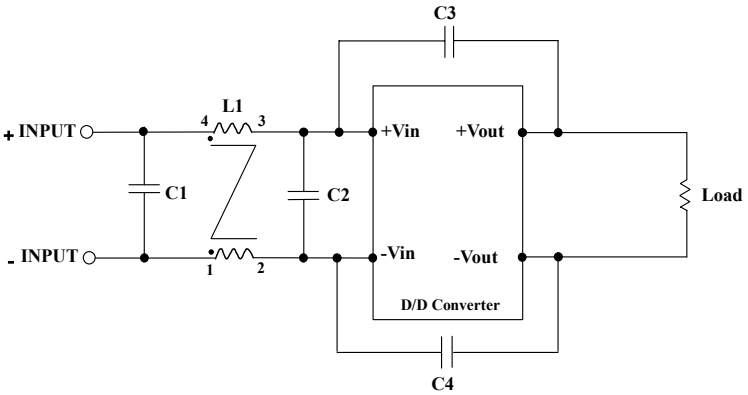

The components used in the Figure 1, together with the manufacturers' part numbers for these components, are as follows:

	C1	C2	C3	C4	L1
LANC24xxUW8	4.7uF/50V	N/A	1000pF/2KV	1000pF/2KV	325uH Common Choke
LANC48xxUW8	1.5uF/100V	1.5uF/100V	1000pF/2KV	1000pF/2KV	325uH Common Choke

FIGURE 2

Recommended EN55022 Class B Filter Circuit Layout

