10/100BASE-Tx Magnetics Module

- Meets IEEE 802.3 standard
- RoHS Compliant
- Quad port configuration
- Design for 100base-Tx transmission over UTP-5 cable
- Operating Temperature: 0℃~70℃

Electrical Specification @25℃					
OCL:	350uH Min. @100KHz/0.1V with 8mA DC Bias				
Hi-POT :	1500Vrms.				
Turn Ratio:	1CT±3%:1CT				
D.C.R:	0.9ohm Max.				
Insertion Loss:	0.1-100MHz -1.0dB Max.				
Return Loss:	2-30MHz	40MHz	50MHz	60-80MHz	100MHz
	-18dB Min.	-14.4dB Min.	-13.1dB Min.	-12dB Min.	-10dB Min.
D.C.M.R. :	30MHz	60MHz	100MHz		
	-40dB Min.	-35dB Min.	-30dB Min.		
Cross Talk :	30MHz	60MHz	100MHz		
	-45dB Min.	-40dB Min.	-35dB Min.		

Schematic

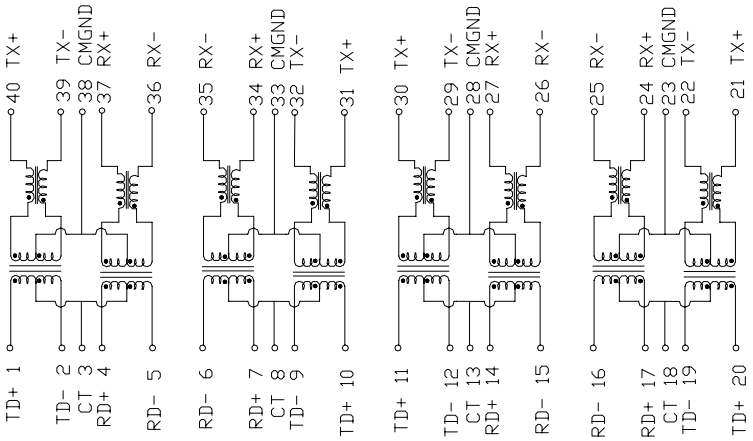

Dimensions

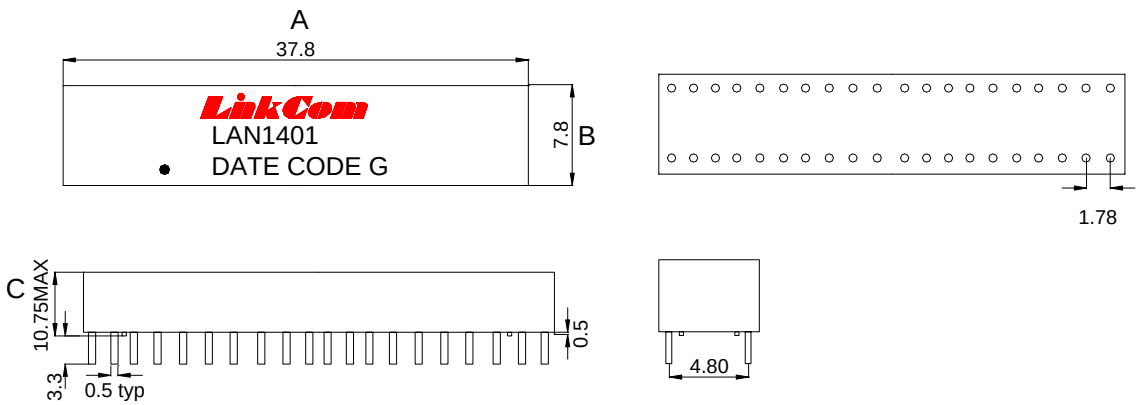

Units: mm
Unless otherwise specified, all tolerances are ±0.25