Broadband Access Transformer

- Designed to meet UL 60950 and EN 60950 requirements for supplementary insulation
- RoHS Compliant
- Operating Temperature -40°C to 85°C

Electrical Specifications @25℃	
OCL:	PIN 16-9= 2.0mH ±10% @ 10KHz/0.1V/Ser. (PIN 11-14 Short)
Leakage Inductance:	PIN 1-4= 3.0uH Max. @ 100KHz/0.1V (PIN 2-3,5-6-7-8,9-11-14-16 Short)
	PIN 5-8= 20uH Max. @ 100KHz/0.1V (PIN 6-7,1-2-3-4,9-11-14-16 Short)
Interwinding Capacitance	PIN 1-16= 15pF Max. @ 100KHz/0.1V (PIN 2-3,PIN 11-14 Short)
	PIN 5-16= 15pF Max. @ 100KHz/0.1V (PIN 6-7,PIN 11-14 Short)
	PIN 1-8= 60pF Max. @ 100KHz/0.1V (PIN 2-3,PIN 6-7 Short)
T.H.D	PIN 16-9 to PIN 1-4 –82dB Max. @ 30KHz/3.162V (PIN 11-14,PIN 2-3 Short)
	PIN 16-9 to PIN 5-8= -82dB Max. @ 30KHz/3.162V (PIN 11-14,PIN 6-7 Short)
D.C.R	PIN 16-9 = 1050 mohm Max. (PIN 11-14 Short)
	PIN 1-4 = 585 mohm Max. (PIN 2-3 Short)
	PIN 5 -8 = 2.2 ohm Max. (PIN 6-7 Short)
Hi-POT :	PRI. – SEC. =1875VAC/60Hz/2Seconds/1mA
Turn Ratio:	PIN16-9 : PIN 1-4 = 4.25±2% :1 (PIN 11-14,PIN 2-3 Short)
	PIN16-9 : PIN 5-8 = 1±2% :1 (PIN 11-14,PIN 6-7 Short)

Dimensions (Units: mm)

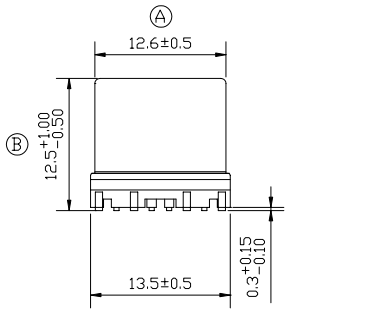

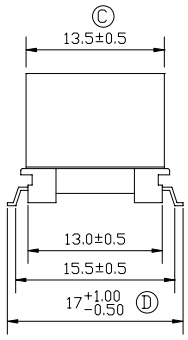

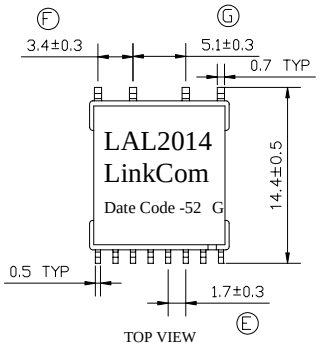

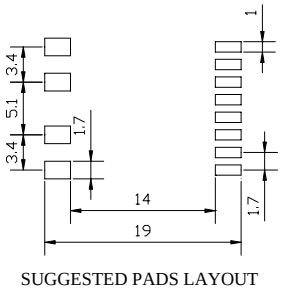

Schematic

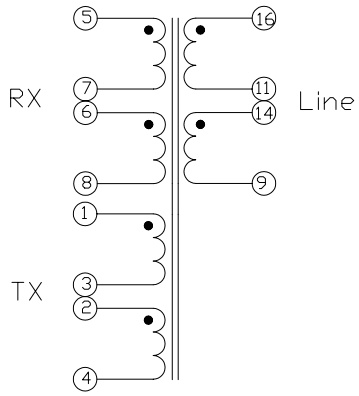

Mark

1.LAL****----LAL2014

2. X----PRODUCT LINE

3. DATE CODE----YYWW

4. G----RoHS