Ordering number : EN 1581D

Monolithic Linear IC

SANYO No.1581D

LA7850

CRT Display Synchronization Deflection Circuit

The LA7850 is a sync·deflection circuit IC dedicated to CRT display use. It can be connected to the LA7832,7833,7837.7838 (for vertical output use) to form a sync·deflection circuit that meets every requirement for CRT display use.
So far, ICs for color TV use have been applied to the sync·deflection circuit for CRT display use and general-purpose ICs such as one-shot multivibrator, inverter and a lot of transistors have been used to form the peripherals such as sync input interface, horizontal phase shifter. The LA7850 contains these peripherals on chip and adopts a stable circuit for horizontal oscillation from 15kHz to 100kHz aiming at improving the characteristics required for CRT display use.

Features

- The horizontal oscillation frequency can be adjusted stably from 15kHz to 100kHz.
- The horizontal display can be shifted right/left.
- The horizontal/vertical sync input can be used intact regardless of the difference in pulse polarity and pulse width.
- The AFC feedback sawtooth wave can be obtained by simply applying a flyback pulse to the IC as a trigger pulse.
- Any duty of the horizontal pulse can be set.
- Good vertical linearity because DC bias at vertical output stage is subjected to sampling control within retrace time.

On-chip Functions

[Horizontal Block]
- AFC
- Horizontal OSC
- X-ray protector
- Horizontal phase shift
- AFC sawtooth wave generator
- Horizontal pulse duty setting

[Vertical Block]
- Vertical OSC
- Vertical sawtooth wave generator
- Sampling type DC voltage control

Maximum Ratings at Ta = 25°C

				unit
Maximum Supply Voltage	V_{10},V_{20} max		14	V
Allowable Power Dissipation	P_d max	Ta≦65°C	780	mW
Operating Temperature	Topr		−20 to +85	°C
Storage Temperature	Tstg		−55 to +125	°C

Package Dimensions

(unit :mm)
3021B

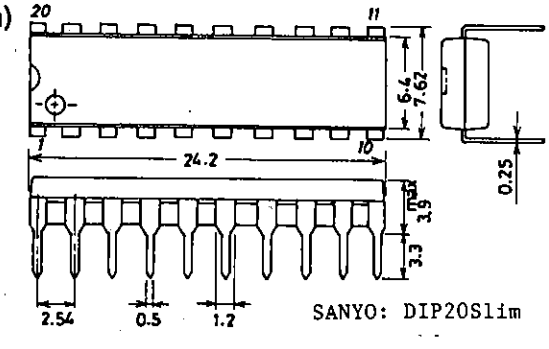

Operating Conditions at Ta = 25°C			unit
Recommended Supply Voltage	V_{10}, V_{20}	12	V
Operating Voltage Range	V_{10}, V_{20}	9 to 13.5	V
Recommended Vertical Pulse Input Peak Value	V_{pulse}	5	Vp-p
Operating Vertical Pulse Input Peak Value Range	V_{pulse}	2 to 6	Vp-p
Recommended Horizontal Pulse Input Peak Value	H_{pulse}	5	Vp-p
Operating Horizontal Pulse Input Peak Value Range	H_{pulse}	2 to 6	Vp-p

Operating Characteristics at Ta = 25°C, V_{10}, V_{20} = 12V			min	typ	max	unit
V_{CC10} Current Dissipation	I_{10}		12		30	mA
V_{CC20} Current Dissipation	I_{20}		5		12	mA
Vertical Frequency Pull-in Range	$V_{p\,in}$	Vertical sync 60Hz	10.0		12.0	Hz
Vertical Free-running Frequency	f_v	f_v center 55 Hz	50		60	Hz
Increased/Reduced Voltage Characteristic of Vertical Frequency	Δf_{vv}	V_{20} = 12±1V, 55Hz at 12V	−0.1		0.1	Hz
Midpoint Control Threshold Level			3.8		4.4	V
Vertical OSC Start Voltage	f_{vst}				4.0	V
Temperature Characteristic of Vertical Frequency		Ta = −10 to +60°C	−0.028		0.028	Hz/°C
Vertical Driver Amplification Factor	G_v		12		18	dB
Horizontal AFC DC Loop Gain	I_{AFC}		±0.85		±1.6	mA
Horizontal Free-running Frequency	f_H	f_H center 15.734kHz	−750		750	Hz
Horizontal OSC Start Voltage	$f_{H\,st}$				4.0	V
Increased/Reduced Voltage Characteristic of Horizontal Frequency	$\Delta f_{H\,v}$	V_{10} = 12±1V, 15.734kHz at 12V	−50		50	Hz
Horizontal OSC Warm-up Drift	Δf_H	5s. to 30min. after application of power	−50		50	Hz
Temperature Characteristic of Horizontal Frequency		Ta = −10 to +60°C	−2.9		2.9	Hz/°C
Horizontal Output Drive Current	I_{12}		6.0		12.0	mA
Increased/Reduced Voltage Characteristic of Phase Shifter Delay Time		V_{10} = 12±1V	−0.5		0.5	%/V
Temperature Characteristic of Phase Shifter Delay Time		Ta = −10 to +60°C	−0.1		0.1	%/°C
Increased/Reduced Voltage Characteristic of Phase Shifter Delay Time		V_{10} = 12±1V	−1.0		1.0	%/V
Temperature Characteristic of Phase Shifter Pulse Width		Ta = −10 to +60°C	−0.13		0.13	%/°C
AFC Phase Comparison Center Time		15.734kHz after F.B.P. input	9.9		11.5	µs
Increased/Reduced Voltage Characteristic of AFC Phase Comparison Center Time		V_{10} = 12±1V	−1.5		1.5	%/V
Temperature Characteristic of AFC Comparison Center Time		Ta = −10 to +60°C	−0.2		0.2	%/°C
Comparison Waveform Generating Input Operation Voltage	V_4		0.6		0.9	V
Pin 13 Voltage at Hold-down Operation Start	V_{13}		0.5		0.8	V

Equivalent Circuit Block Diagram

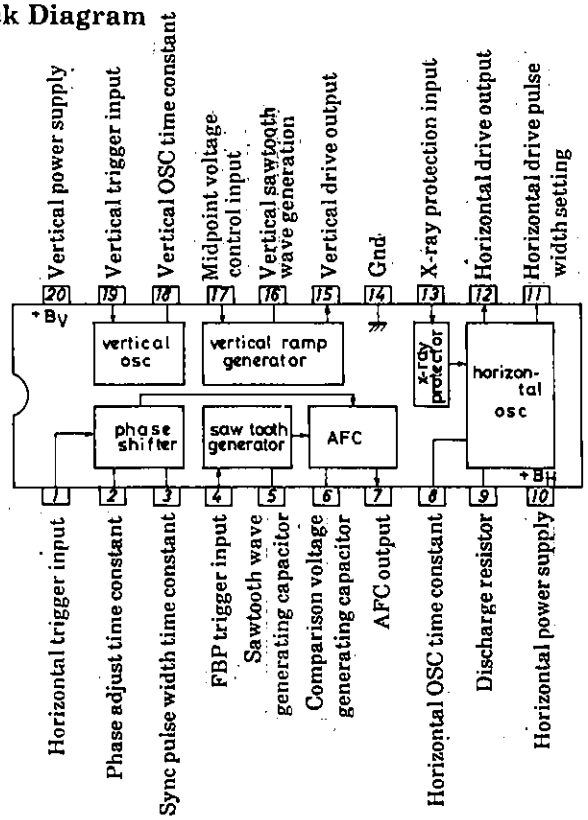

Sample Application Circuit: 14 "Color Monitor/$f_V = 60Hz$, $f_H = 15.734kHz$

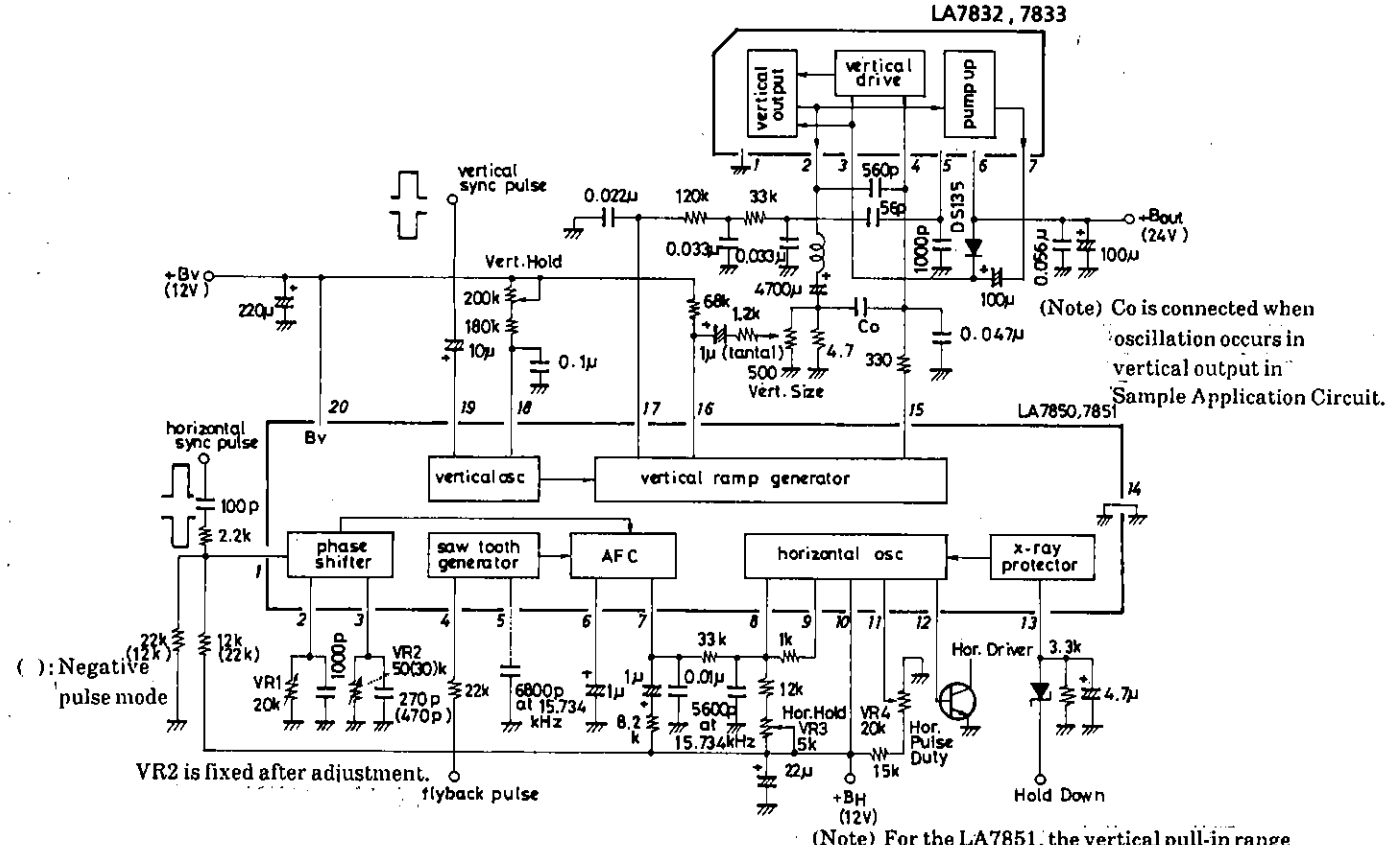

Unit (resistance:Ω, capacitance:F)

Sample Application Circuit: 14" Color Moniror/$f_V = 60Hz$, $f_H = 15.734kHz$

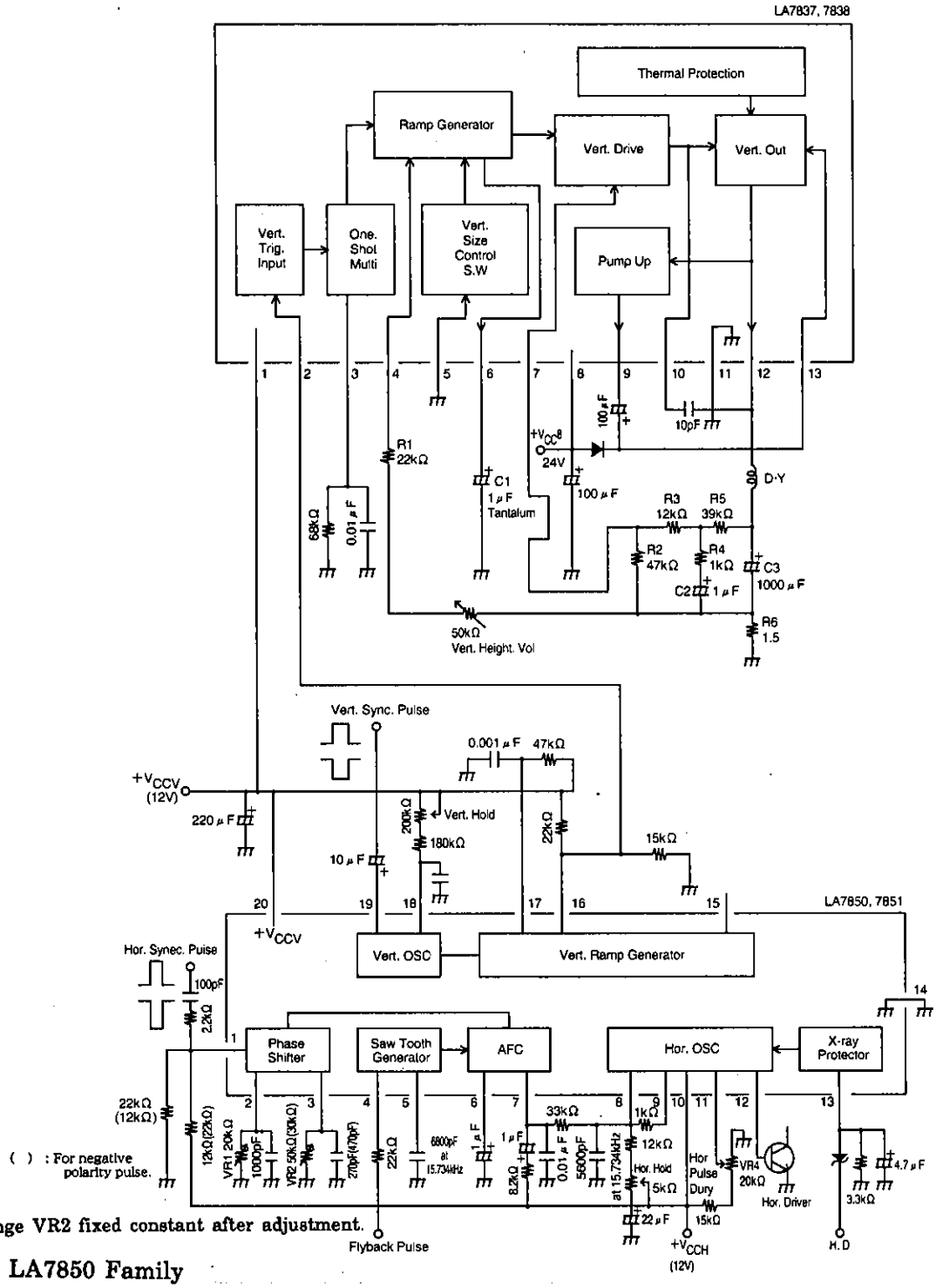

Change VR2 fixed constant after adjustment.

LA7850 Family

Type No.		LA7850	LA7851	LA7852	LA7853
Package		DIP-20S (Slim Type)	DIP-20S (Slim Type)	DIP-22S (Shrink Type)	DIP-22S (Shrink Type)
Differences in characteristics	Vertical pull-in range ($f_v = 60Hz$)	10Hz	20Hz	10Hz	20Hz
	GND pin	Hor./vert. common	Hor./vert. common	Hor./vert. separated	Hor./vert. separated

■ No products described or contained herein are intended for use in surgical implants, life-support systems, aerospace equipment, nuclear power control systems, vehicles, disaster/crime-prevention equipment and the like, the failure of which may directly or indirectly cause injury, death or property loss.

■ Anyone purchasing any products described or contained herein for an above-mentioned use shall:
① Accept full responsibility and indemnify and defend SANYO ELECTRIC CO., LTD., its affiliates, subsidiaries and distributors and all their officers and employees, jointly and severally, against any and all claims and litigation and all damages, cost and expenses associated with such use:
② Not impose any responsibility for any fault or negligence which may be cited in any such claim or litigation on SANYO ELECTRIC CO., LTD., its affiliates, subsidiaries and distributors or any of their officers and employees jointly or severally.

■ Information (including circuit diagrams and circuit parameters) herein is for example only; it is not guaranteed for volume production. SANYO believes information herein is accurate and reliable, but no guarantees are made or implied regarding its use or any infringements of intellectual property rights or other rights of third parties.

This catalog provides information as of **June , 1996 .** Specifications and information herein are subject to change without notice.