Ordering number : EN5715A

LA4725

Monolithic Linear IC

2-channel 30W BTL Audio Amplifier

ON Semiconductor®

http://onsemi.com

Overview

The LA4725 is a 2-channel BTL audio power amplifier IC for Car audio. It was designed for the best possible audio quality and features an extended low band roll-off frequency provided by a newly-developed NF circuit that does not require an external capacitor. Furthermore, crosstalk, which can cause muddiness in the audio output, has been significantly reduced by both circuit and wiring pattern improvements. Thus this amplifier can provide powerful lows and clear highs.

Features

- Total output (EIAJ power): 30W+30W (at V_{CC} = 14.4V, R_L = 4Ω, THD = 30%)
- High-fidelity design (f_L < 10Hz, f_H = 130kHz)
- Extremely low impulse noise levels
- An arbitrary amplifier startup time can be set up with external components
- built-in standby switch circuit
- Full complement of built-in protection circuits (includes circuits that protect against shorting to V_{CC}, shorting to ground, load shorting, over-voltages and excessive temperatures)

Specifications

Maximum Ratings at Ta = 25°C

Parameter	Symbol	Conditions	Ratings	Unit
Maximum supply voltage	V_{CC} max	No signal	18	V
Surge supply voltage	V_{CC} surge	t ≤ 0.2s, Giant pulse one-shot	50	V
Maximum output current	I_O peak	Per channel	3.0	A
Allowable power dissipation	Pd max	With a infinite heat sink	32	W
Operating temperature	Topr		-35 to +85	°C
Storage temperature	Tstg		-40 to +150	°C

Stresses exceeding Maximum Ratings may damage the device. Maximum Ratings are stress ratings only. Functional operation above the Recommended Operating Conditions is not implied. Extended exposure to stresses above the Recommended Operating Conditions may affect device reliability.

Operating Conditions at Ta = 25°C

Parameter	Symbol	Conditions	Ratings	Unit
Recommended supply voltage	V_{CC}		13.2	V
Allowable operating supply voltage	V_{CC} op		9 to 16	V
Recommended load resistance	R_L		4	Ω

Note : With V_{CC}, R_L, and the output level in ranges such that the Pd max for the heat sink used is not exceeded.

Electrical Characteristics at Ta = 25°C, V_{CC} = 13.2V, R_L = 4Ω, f = 1kHz, Rg = 600Ω

Parameter	Symbol	Conditions	Ratings			Unit
			min	typ	max	
Quiescent current	I_{CCO}	Rg = 0	70	125	250	mA
Standby mode current drain	I_{st}	Standby mode (amplifier off), with no power supply capacitor.		10	60	μA
Voltage gain	V_G	V_O = 0dBm	38	40	42	dB
Total harmonic distortion	THD	P_O = 2W		0.06	0.2	%
Output power	P_O1	THD = 10%	13	17		W
	P_O2	THD = 10%, V_{CC} = 14.4V		20		W
	P_O3	THD = 30%, V_{CC} = 14.4V		30		W
Output offset voltage	V_N offset	Rg = 0	-300		+300	mV
Output noise voltage	V_{NO}	Rg = 0, BPF = 20Hz to 20kHz		0.1	0.5	mV
Ripple rejection ratio	SVRR	Rg = 0, V_R = 0dBm, f_R = 100Hz	40	50		dB
Channel separation	CHsep	Rg = 10kΩ, V_O = 0dBm	50	60		dB
Input resistance	Ri		21	30	39	kΩ
Standby pin applied voltage	V_{ST}	Amplifier on (applied through an external 10kΩ resistor)	2.5		V_{CC}	V

Package Dimensions

unit : mm (typ)

3113B

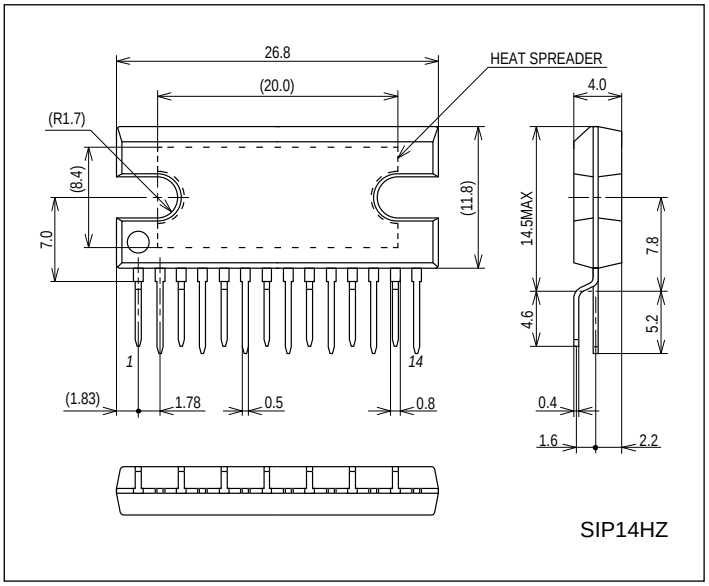

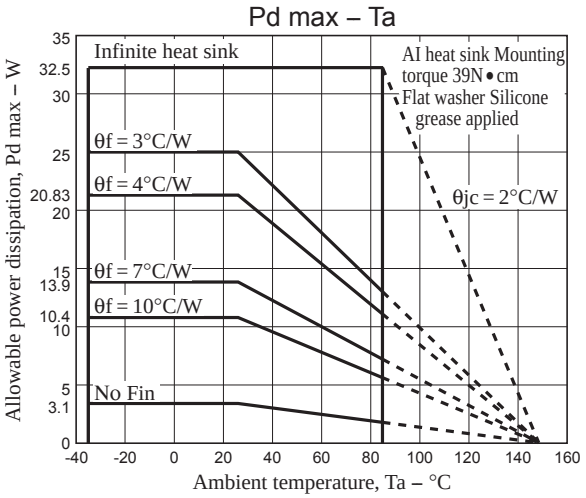

Block Diagram

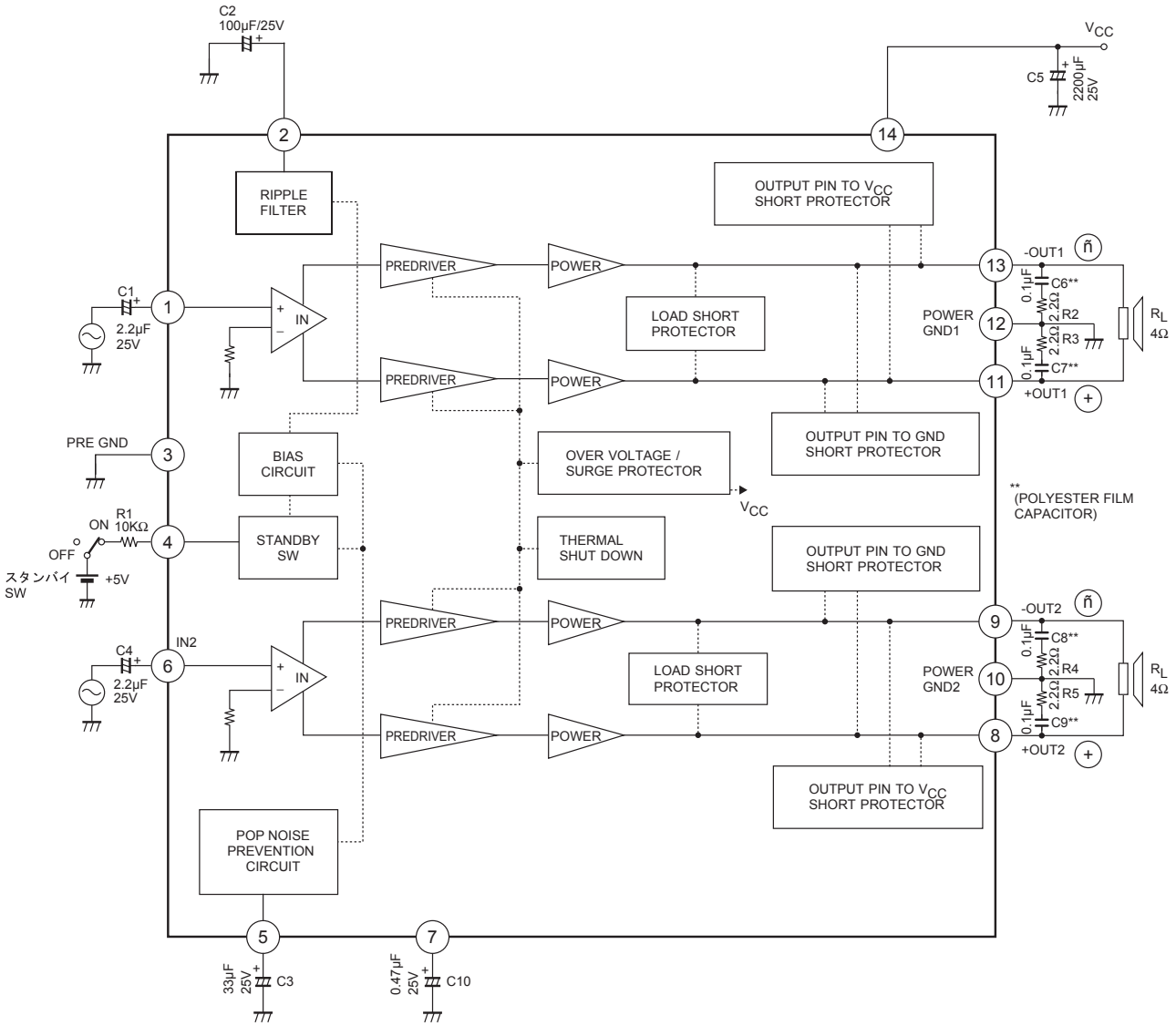

C3
Sets the amplifier starting time
(Approximately 0.6 seconds when 33µF)

C10
Impulse noise reduction
(Note : The device's ability to withstand shorting to V_{CC} or shorting to ground when V_{CC} is around 16V may be reduced as the value of this capacitor is increased. We recommend 0.47µF.)

Pin Voltages

V_{CC} = 13.2V, with 5V applied to STBY through a 10kΩ resistor, R_L = 4Ω, Rg = 0

Pin No.	1	2	3	4	5	6	7
Pin name	IN1	DC	PRE-GND	STBY	ON TIME	IN2	POP
Pin voltage	1.53V	5.65V	0V	3.25V	2.32V	1.53V	2.14V

Pin No.	8	9	10	11	12	13	14
Pin name	+OUT2	–OUT2	PWR-GN	+OUT1	PWR-GN	–OUT1	V_{CC}
Pin voltage	5.70V	5.70V	0V	5.70V	0V	5.70V	13.2V

External Components

C1 and C4: Input capacitors. A value of 2.2μF is recommended. Determine the polarity based on the DC potential of the circuit connected directly to the LA4725 front end. Note that the low band response can be adjusted by varying f_L with the capacitors C1 and C4.

C2 : Decoupling capacitor (ripple filter)

C3 : Sets the amplifier starting time, which will be approximately 0.6 seconds for a value of 33μF. The starting time is proportional to the value of this capacitor, and can be set to any desired value.

C5 : Power-supply capacitor

C6, C7, C8, and C9 :
Oscillation prevention capacitors. Use polyester film capacitors (Mylar capacitors) with excellent characteristics. (Note that the series resistors R2, R3, R4, and R5 are used in conjunction with these capacitors to achieve stable amplifier operation.) A value of 0.1μF is recommended.

C10 : Impulse noise reduction capacitor. A value of 0.47μF is recommended. Caution is required when selecting the value for this capacitor, since increasing its value influences the operation of the circuits that protect against shorting the amplifier output pins to V_{CC} or to ground when higher V_{CC} voltages (approximately 16V or higher) are used.

R1 : Standby switch current limiting resistor. A value of 10kΩ is recommended when a voltage in the range 2.5 to 12V will be applied as the standby switching voltage. Note that this resistor is not optional: it must be included.

IC Internal Characteristics and Notes

1. Standby function
   - Pin 4 is the standby switch. A voltage of 2.5V or higher must be applied through an external resistor to turn the amplifier on.
   - If a voltage of over 12V will be applied as the standby mode switching voltage, use the following formula to determine the value of R1 so that the current entering at pin 4 remains under 500μA.

$$R1 = \frac{\text{<applied voltage>} - 1.4}{500\mu A} - 10k\Omega$$

Pin 4 Internal Equivalent Circuit

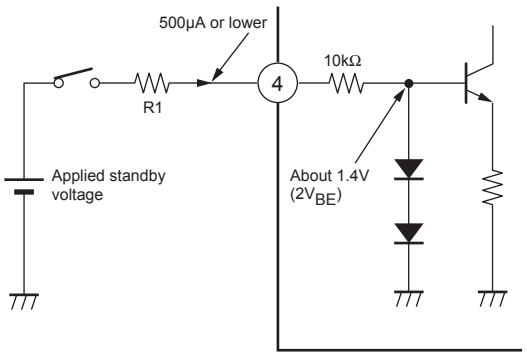

2. Muting function
   - Pin 5 connects the capacitor that determines the starting time to prevent impulse noise. It can also be used to mute the amplifier output by shorting pin 5 to ground. When this function is used, the recovery time depends on C3.

3. Impulse noise improvements
   - While the LA4725 achieves a low level of impulse noise, if even further reductions in impulse noise at power on/off (and when switching into or out of standby mode) a 0.47μF capacitor may be inserted between pin 7 and the PRE GND pin (pin 3). (Pin 7 is the output amplifier bias pin. Since the ability to withstand shorting the output pins to V_{CC} or ground is reduced for supply voltages over 16V if the pin 7 capacitance is large, we recommend a value of 0.47μF or lower for this capacitor.)

4. Protection circuits
   - Due to the system structure of the protection circuit for shorts to V_{CC} or ground, if there is a DC resistance between the amplifier output pins and ground, the protection circuit may operate when power is first applied and the amplifier may fail to turn on. The basic design approach we recommend is not to adopt any designs in which there is a DC resistance between the amplifier outputs and ground.

   - The LA4725 includes a built-in thermal protection circuit to prevent the IC from being damaged or destroyed if abnormally high temperatures occur. This thermal protection circuit gradually reduces the output if the IC junction temperature (Tj) reaches the range 170 to 180°C due to inadequate heat sinking or other problem. If the temperature falls, the amplifier will restart automatically.

   - The LA4725 also includes other protection circuits. Use of these circuits also requires care during end product design and testing.

5. Other notes
   - The LA4725 is a BTL power amplifier. When testing this device, the ground systems for the test equipment connected to IC inputs, and that for the test equipment connected to IC outputs, must be isolated. Do not use a common ground.

Printed Circuit Pattern

(copper foil side)

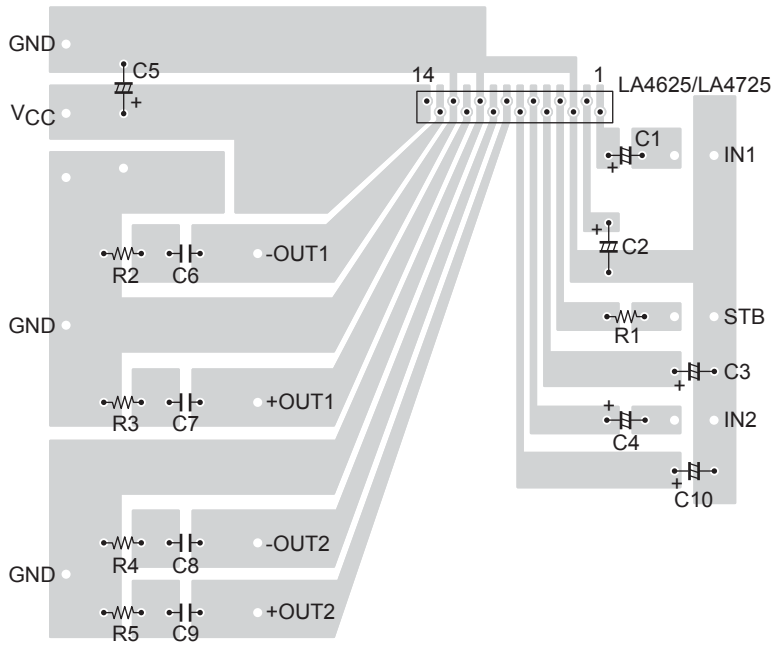

$P_O - V_{CC}$

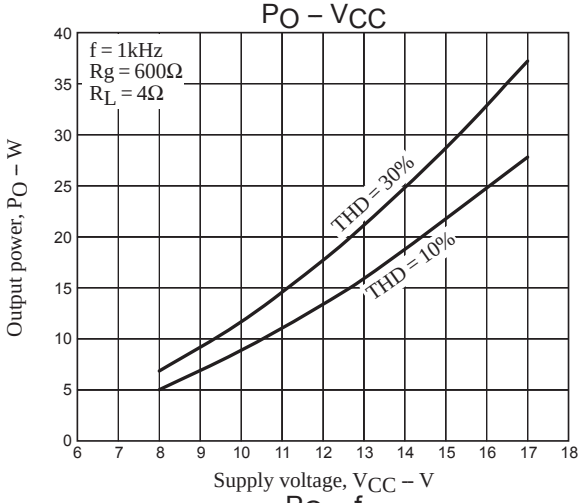

$P_O - V_{IN}$

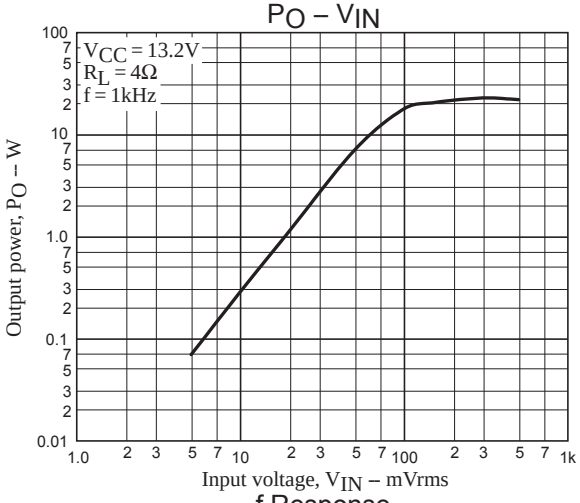

$P_O - f$

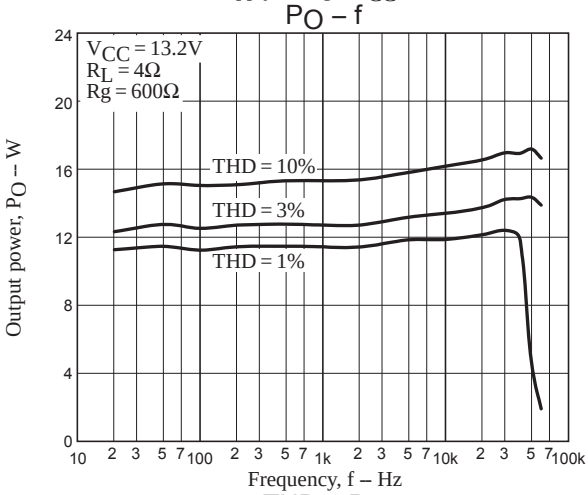

f Response

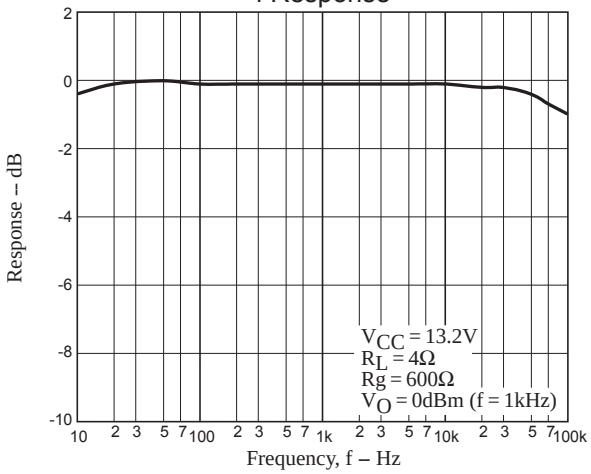

$THD - P_O$

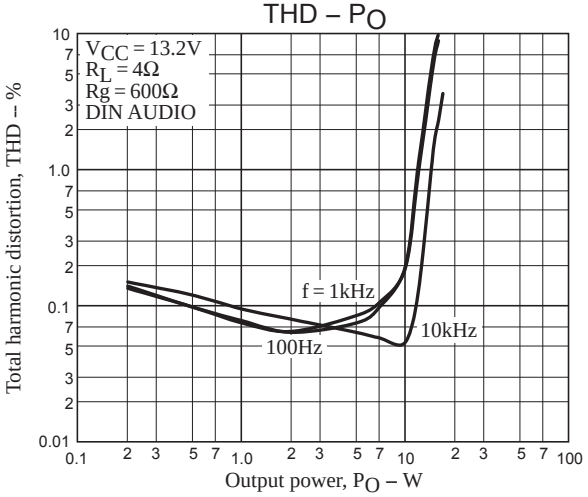

THD – f

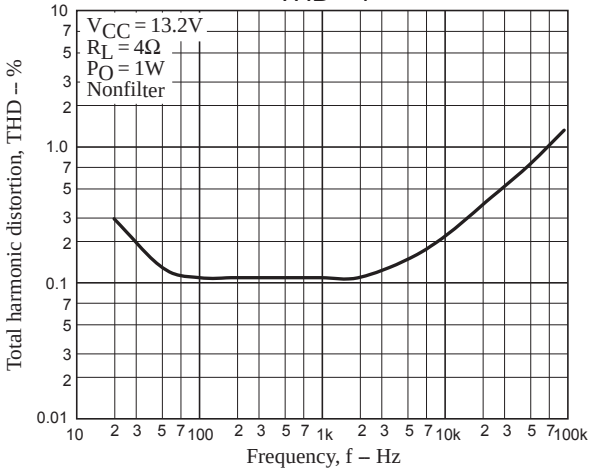

CHsep – f

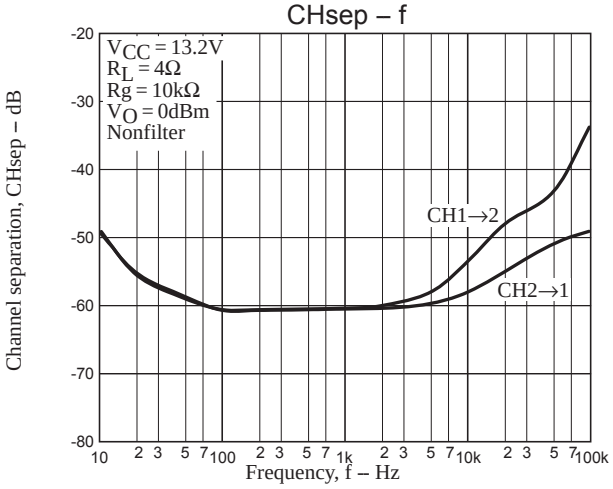

$V_{NO} - V_{CC}$

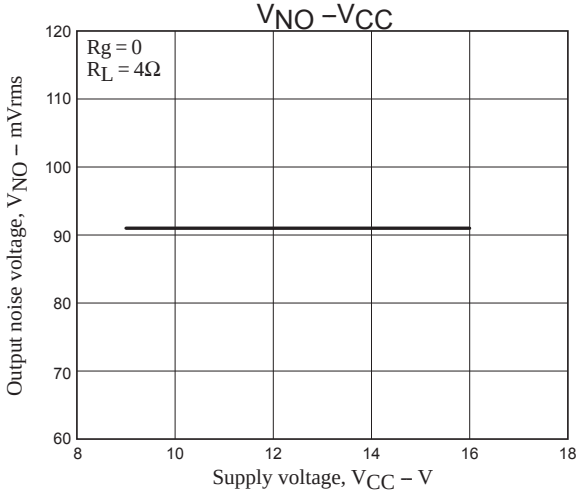

SVRR – V_{CC}

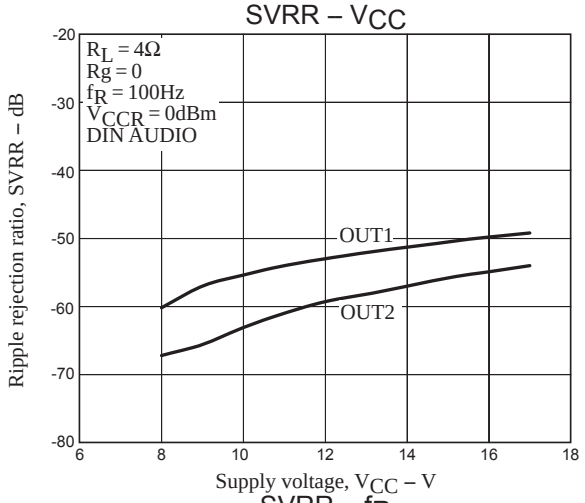

SVRR – V_{CCR}

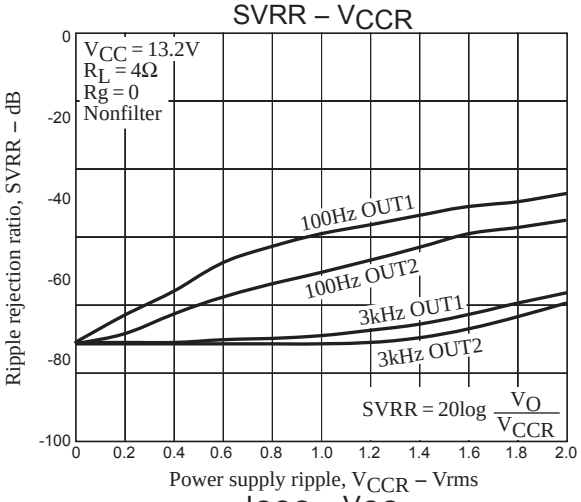

SVRR – f_R

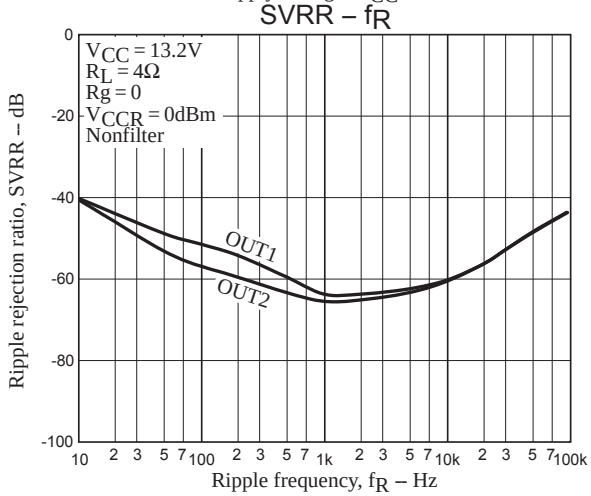

I_{CCO} – V_{CC}

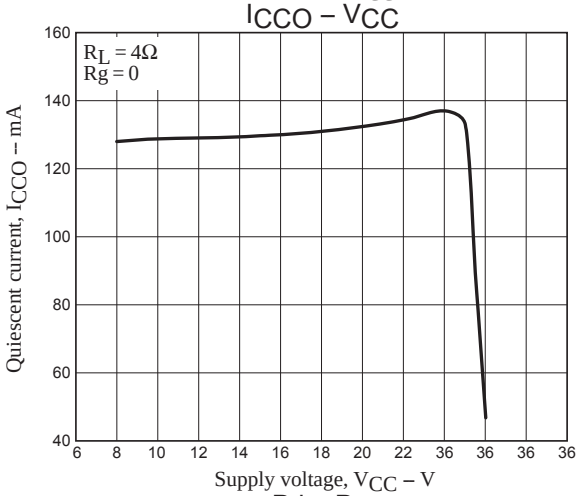

V_N – V_{CC}

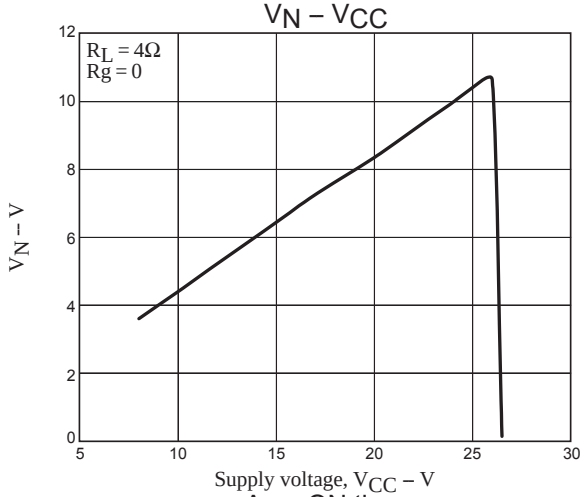

Pd – P_O

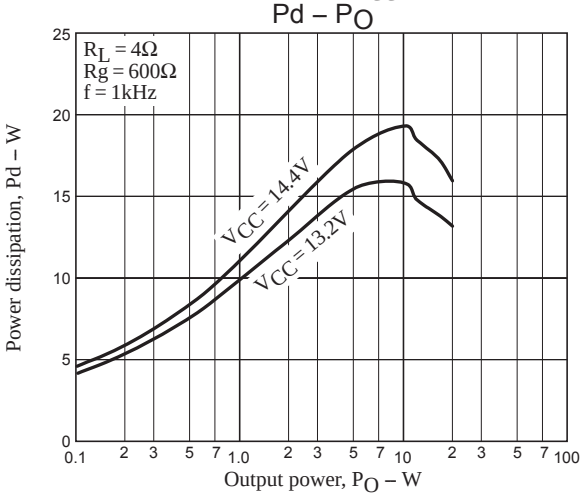

Amp ON time

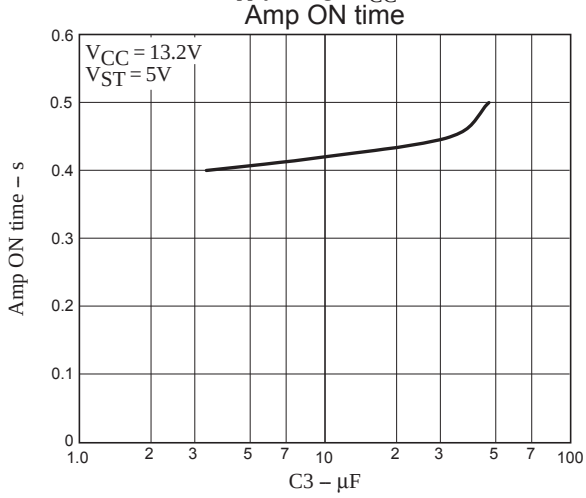

ON Semiconductor and the ON logo are registered trademarks of Semiconductor Components Industries, LLC (SCILLC). SCILLC owns the rights to a number of patents, trademarks, copyrights, trade secrets, and other intellectual property. A listing of SCILLC's product/patent coverage may be accessed at www.onsemi.com/site/pdf/Patent-Marking.pdf. SCILLC reserves the right to make changes without further notice to any products herein. SCILLC makes no warranty, representation or guarantee regarding the suitability of its products for any particular purpose, nor does SCILLC assume any liability arising out of the application or use of any product or circuit, and specifically disclaims any and all liability, including without limitation special, consequential or incidental damages. "Typical" parameters which may be provided in SCILLC data sheets and/or specifications can and do vary in different applications and actual performance may vary over time. All operating parameters, including "Typicals" must be validated for each customer application by customer's technical experts. SCILLC does not convey any license under its patent rights nor the rights of others. SCILLC products are not designed, intended, or authorized for use as components in systems intended for surgical implant into the body, or other applications intended to support or sustain life, or for any other application in which the failure of the SCILLC product could create a situation where personal injury or death may occur. Should Buyer purchase or use SCILLC products for any such unintended or unauthorized application, Buyer shall indemnify and hold SCILLC and its officers, employees, subsidiaries, affiliates, and distributors harmless against all claims, costs, damages, and expenses, and reasonable attorney fees arising out of, directly or indirectly, any claim of personal injury or death associated with such unintended or unauthorized use, even if such claim alleges that SCILLC was negligent regarding the design or manufacture of the part. SCILLC is an Equal Opportunity/Affirmative Action Employer. This literature is subject to all applicable copyright laws and is not for resale in any manner.