Ordering number : ENA2051

LA4631VC

ON Semiconductor®

http://onsemi.com

Monolithic Linear IC

2-Channel SE AF Power Amplifier for Home Audio Use

Overview

The LA4631VC built-in a 2 channel single-ended output power amplifier that a power supply voltage range is wide and has additionally the standby function to reduce the current drain. It is a power amplifier IC suitable for driving speaker of various audio system equipments, which is especially useful for products that use batteries.

Functions

- Output power = 4.5W (typical) (V_{CC} = 12V, R_L = 3Ω, THD+N = 10%)
- Built in standby function (Pin5)
- Built in thermal suht down circuit

Specifications

Maximum Ratings at Ta = 25°C

Parameter	Symbol	Conditions	Ratings	Unit
Maximum supply voltage	V_{CC} max	With no input signal	24	V
Maximum output current	I_O peak	Per channel	2.5	A
Allowable power dissipation	Pd max	With an infinitely large heat sink	25	W
Operating temperature	Topr		-20 to +75	°C
Storage temperature	Tstg		-40 to +150	°C

Stresses exceeding Maximum Ratings may damage the device. Maximum Ratings are stress ratings only. Functional operation above the Recommended Operating Conditions is not implied. Extended exposure to stresses above the Recommended Operating Conditions may affect device reliability.

Operating Conditions at Ta = 25°C

Parameter	Symbol	Conditions	Ratings	Unit
Recommended supply voltage	V_{CC}		12	V
Recommended load resistance range	R_L op		3 to 8	Ω
Allowable operating supply voltage range	V_{CC} op		5.5 to 22	V

*: V_{CC}, R_L, and output level such that Pd max, is not exceeded for the size of heat sink used.

Electrical Characteristics at Ta = 25°C, V_{CC} = 12V, R_L = 3Ω, f = 1kHz, Rg = 600Ω

Parameter	Symbol	Conditions	Ratings			Unit
			Min.	Typ.	Max.	
Quiescent current	I_{CCO}	Rg = 0Ω	18	35	80	mA
Standby current	Ist			1	10	μA
Voltage gain	VG	V_O = 0dBm	33	35	37	dB
Total harmonic distortion	THD	P_O = 1W		0.15	0.4	%
Output power	P_O1	THD = 10%	3.0	4.5		W
	P_O2	V_{CC} = 9V, THD = 10%	2.0	2.5		W
Output noise voltage	V_{NO}	Rg = 0Ω, BPF = 20Hz to 20kHz		0.05	0.25	mVrms
Ripple rejection	SVRR	Rg = 0Ω, f_R = 100Hz, V_{CC}R = 0dBm	50	60		dB
Channel separation	CHsep	Rg = 10kΩ, V_O = 0dBm	55	65		dB
Input resistance	Ri		20	30	40	kΩ
Standby pin applied voltage	Vst	Amplifier on(Pin 5 voltage)	1.5	5.0		V

Package Dimensions

Unit : mm (typ)

3049C

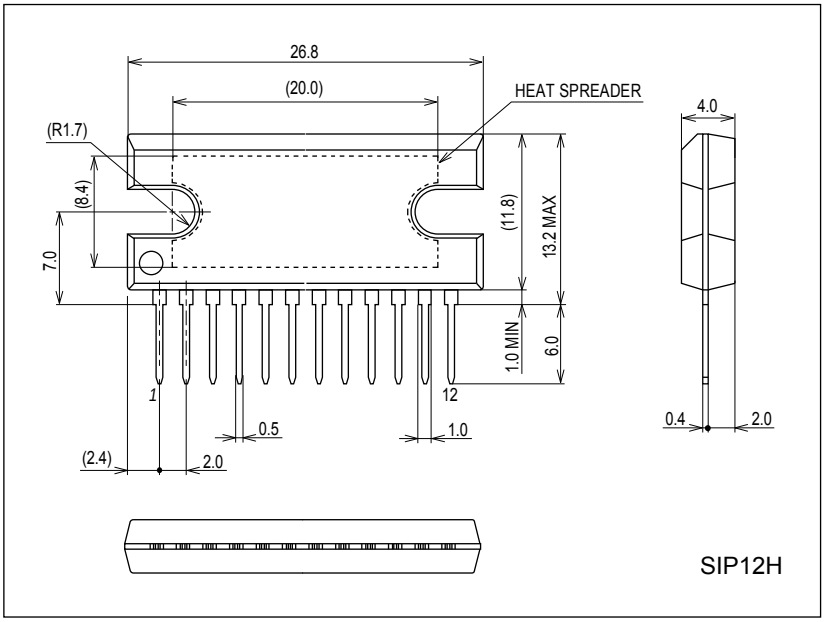

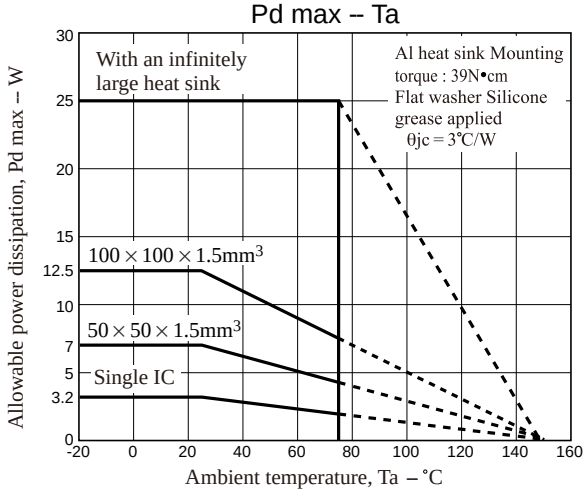

Block Diagram

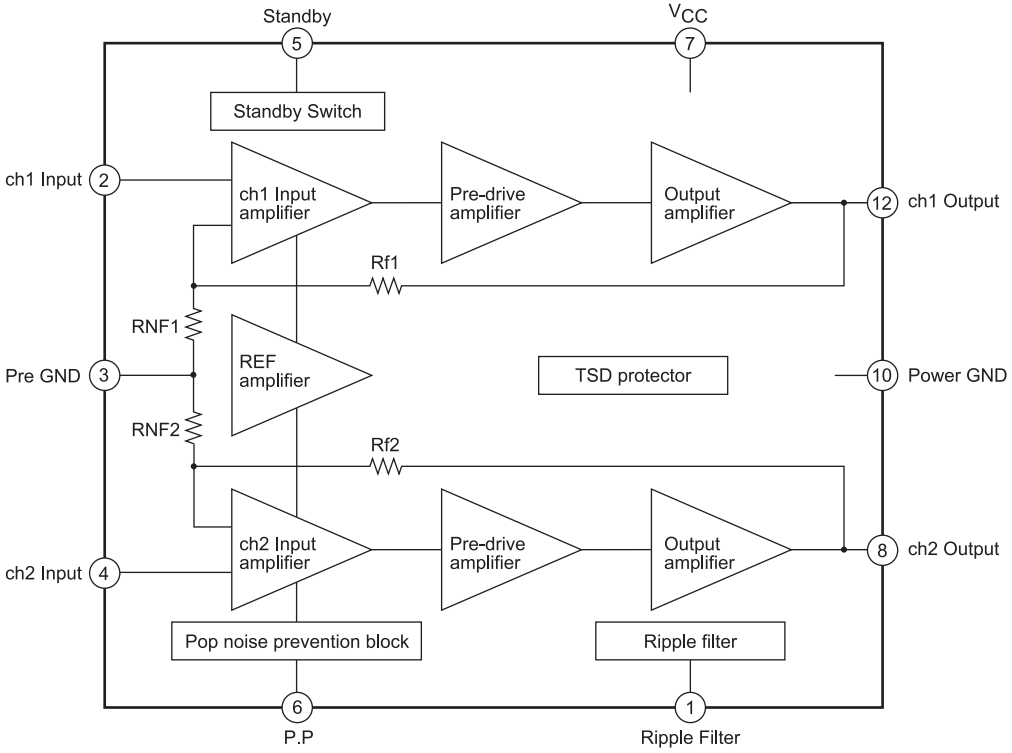

Application Circuit Example

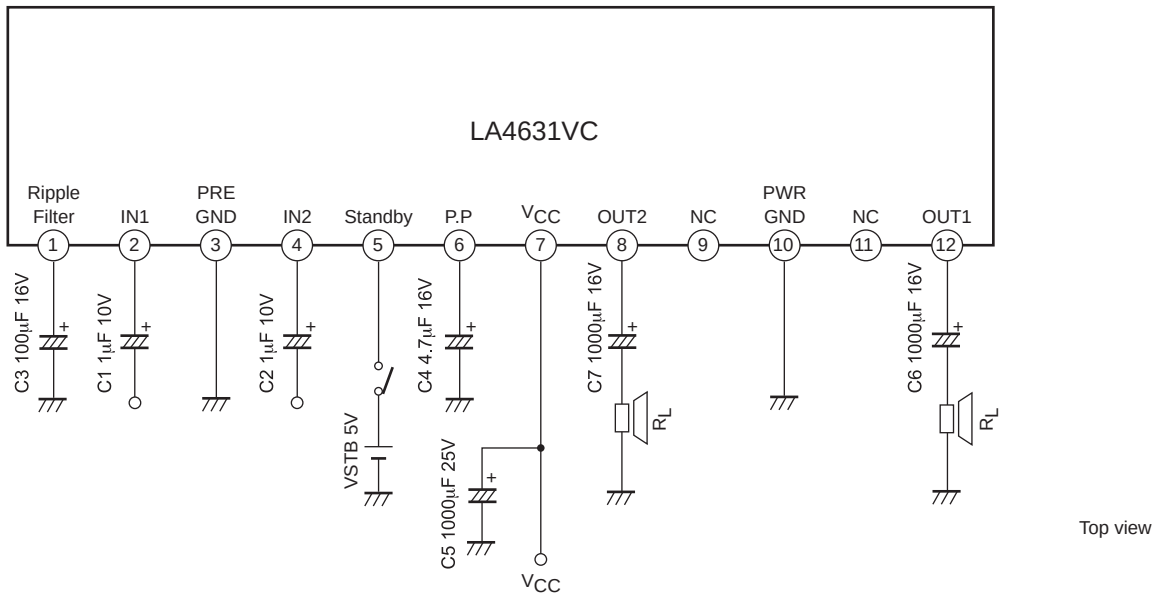

Top view

External Components and Usage Notes

C1, C2 : These are input coupling capacitors; we recommend a value of 1μF or lower. The LA4631VC input pin potential is about 1.4V, and the polarity must be considered due to the DC potential of the circuits connected to the LA4631VC front end. The amplifier's startup time (the time from the point power is first applied until the point an output is generated) will change proportionally with the values of these input capacitors. (When 1μF capacitors are used, the startup time will be about 0.2 seconds.)

C3 : This capacitor is used as a ripple filter. We recommend a value of 100μF. Amplifier impulse noise when turned off (when the standby pin goes low) may be made worse if a value under 100μF is used. The pin 1 voltage is about $1/2V_{CC}$. A DC mute function can be applied if pin 1 is connected to ground through a 300 to 500Ω resistor. Note that the muting activation voltage will be too low if a resistor value of 750Ω or higher is used.

C4 : This is an impulse noise prevention capacitor. The recommended value is 4.7μF. If a value of 2.2μF or lower is used for C4, impulse noise when the amplifier is turned off (when the standby pin goes low) may be made worse. Also, if a value of 10μF or higher is used, an "incomplete muting" phenomenon may occur when the amplifier is turned off (when the standby pin goes low).

C5 : Power supply capacitor. This capacitor should be located as close as possible to the IC (to minimize increases in the power supply line impedance) to achieve stable amplifier operation.

C6, C7 : Output capacitors. These capacitors influence the amplifiers low band frequency characteristics. ($fc = 1/2\pi Cout \times R_L$)
fc = low band cutoff frequency, Cout = C6, C7

(Reference) Pin 5 Equivalent Circuit Inside IC

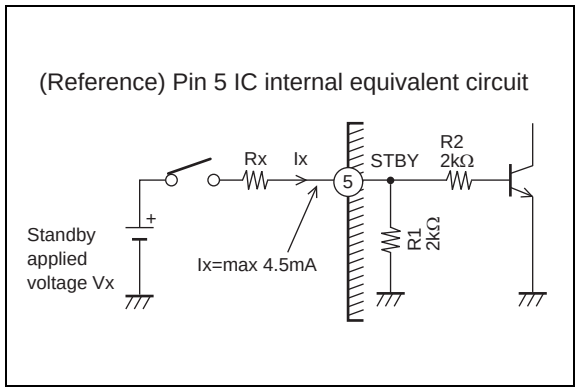

- The amplifier can be turned on and off by controlling the level (high/low) of Pin 5.
- Applying a signal equal or greater than 1.5V and 800μA to Pin 5 turns on the amplifier. (If 5V is applied directly to Pin 5 the inflow current od Pin 5 is approximately 4.5mA.)
- If a voltage, Vx, exceeding 5V is to be applied, current limiting resistor (Rx) should be inserted to limit the inflow current to 4.5mA. (See following equation.)
  $Rx = (Vx - 5V)/4.5mA$
- If Pin 5 is to be controlled by the microprocessor, the Pin 5 inflow current (Ix) should be optimized for the capacity of the microprocessor by calculating Rx using the following equation, as a general guideline, and then confirming the inflow current through sctual measurement.
  $Rx = (Vx/Ix) - R1\ (2k\Omega)$

Note: When apply voltage to standby (Pin 5), please add resistor (Rx).

I_{CCO} – V_{CC}

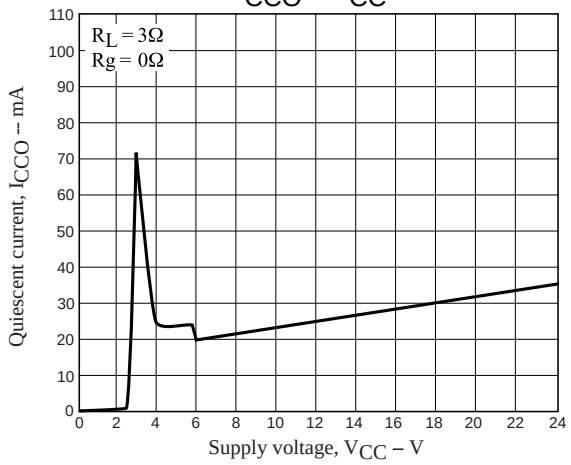

P_O – V_{CC}

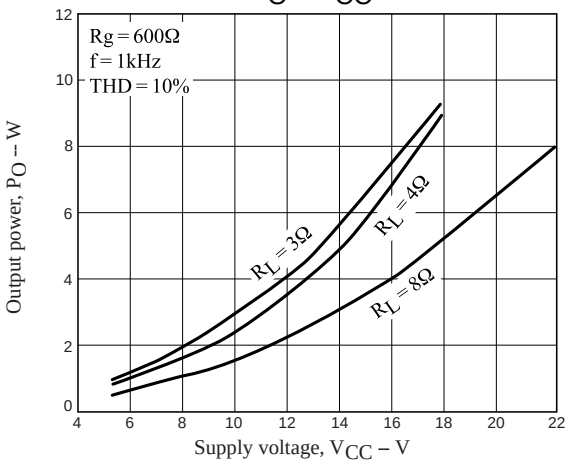

THD – P_O

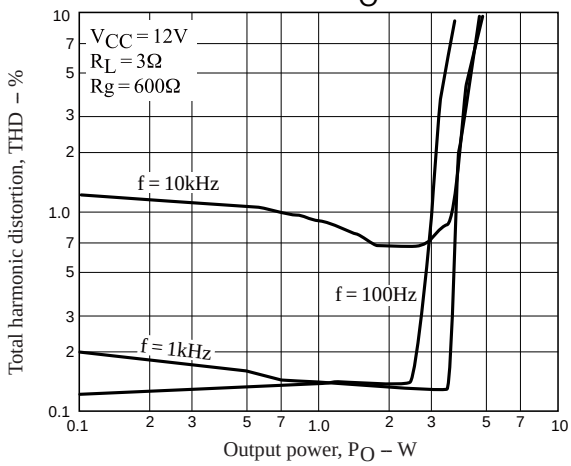

THD – f

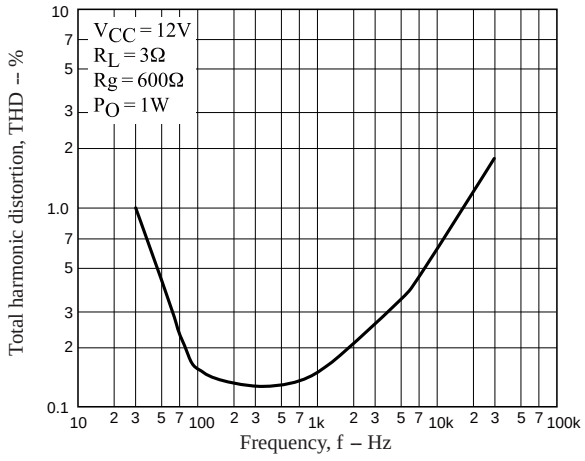

Pd - P_O (V_{CC}=12V)

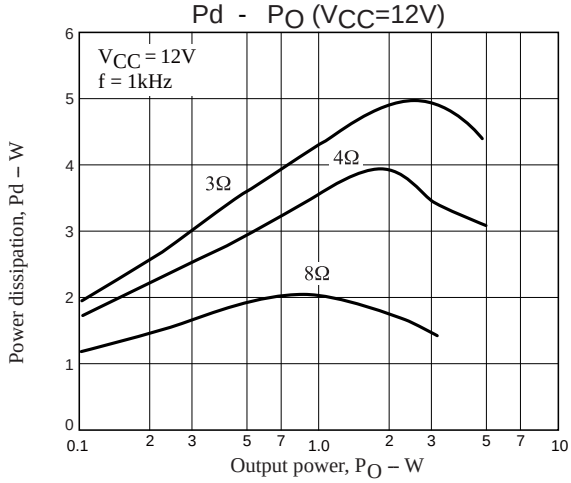

I_{CC} - P_O (V_{CC}=12V)

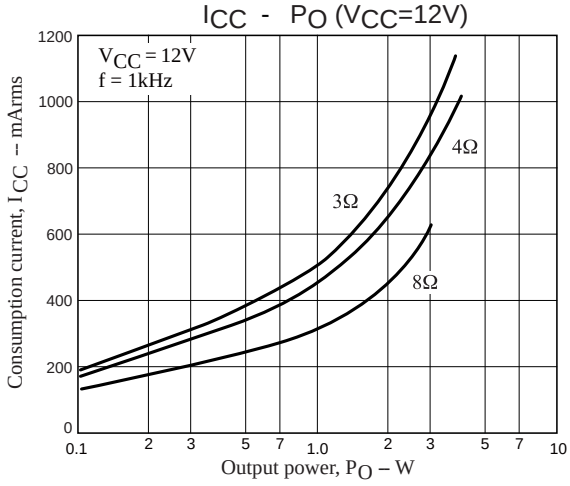

Pd - P_O (V_{CC}=9V)

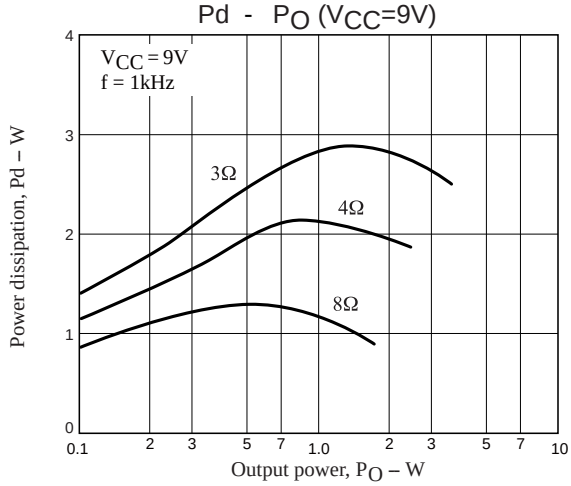

I_{CC} - P_O (V_{CC}=9V)

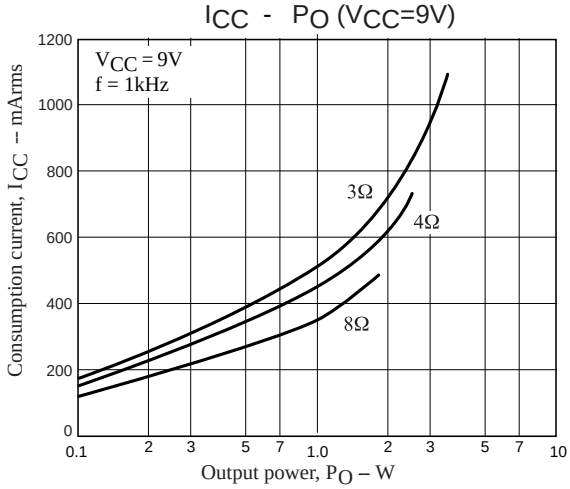

Gain – f

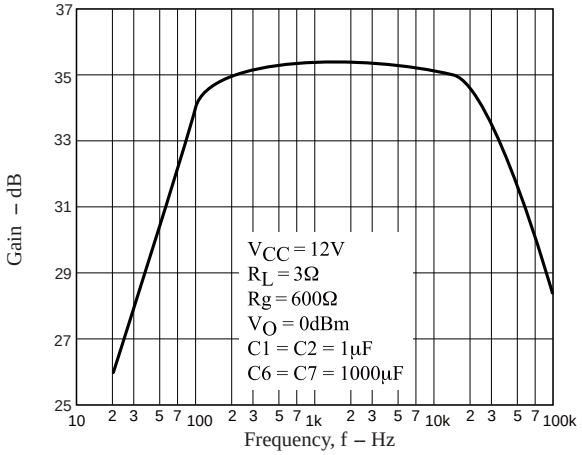

P_O – f

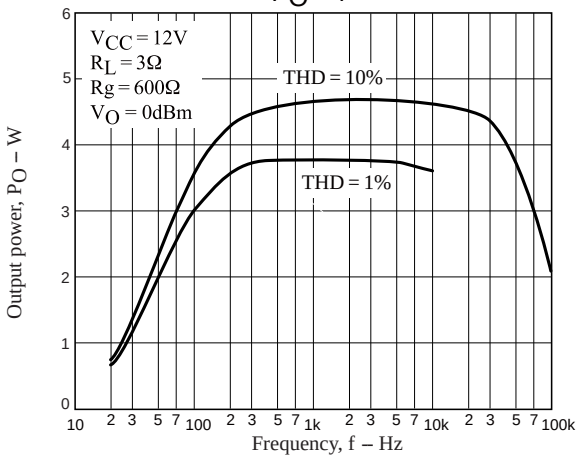

CHsep – f

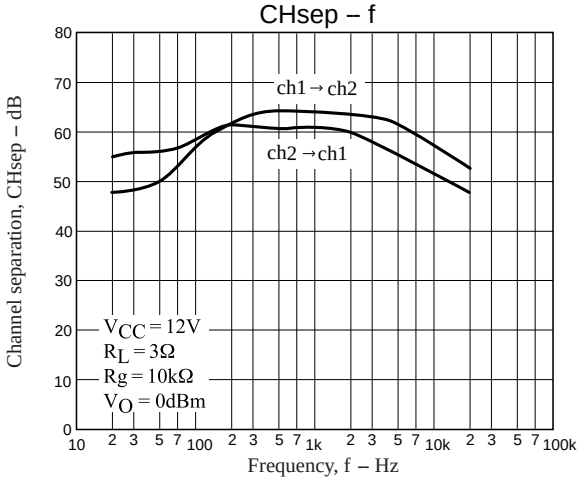

VNO – Rg

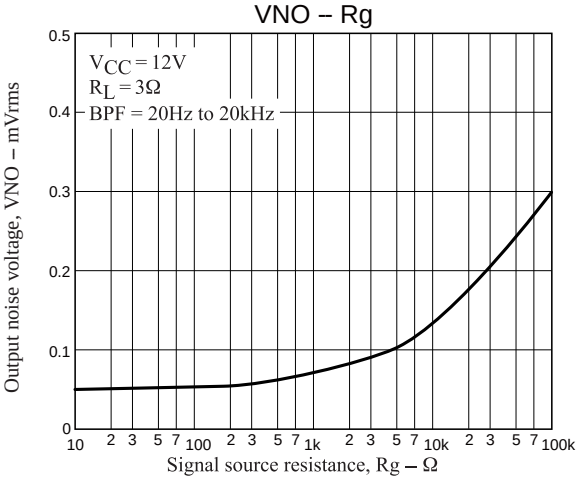

SVRR – V_{CC}

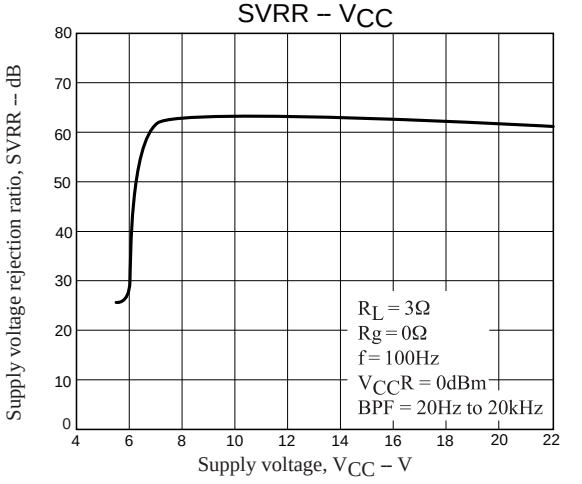

SVRR – f_R

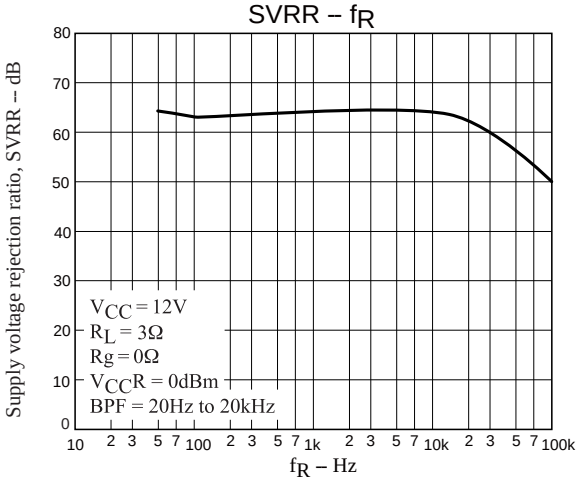

SVRR – $V_{CC}R$

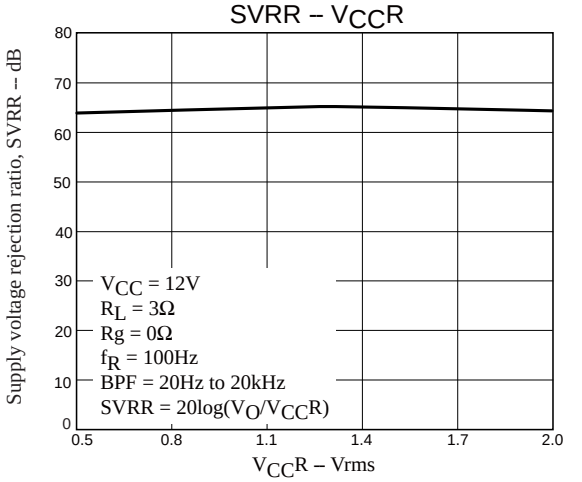

I_{CCO} – Vstby

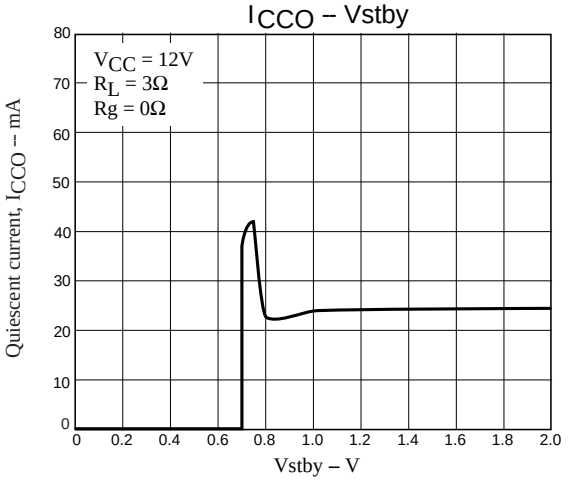

ON Semiconductor and the ON logo are registered trademarks of Semiconductor Components Industries, LLC (SCILLC). SCILLC owns the rights to a number of patents, trademarks, copyrights, trade secrets, and other intellectual property. A listing of SCILLC's product/patent coverage may be accessed at www.onsemi.com/site/pdf/Patent-Marking.pdf. SCILLC reserves the right to make changes without further notice to any products herein. SCILLC makes no warranty, representation or guarantee regarding the suitability of its products for any particular purpose, nor does SCILLC assume any liability arising out of the application or use of any product or circuit, and specifically disclaims any and all liability, including without limitation special, consequential or incidental damages. "Typical" parameters which may be provided in SCILLC data sheets and/or specifications can and do vary in different applications and actual performance may vary over time. All operating parameters, including "Typicals" must be validated for each customer application by customer's technical experts. SCILLC does not convey any license under its patent rights nor the rights of others. SCILLC products are not designed, intended, or authorized for use as components in systems intended for surgical implant into the body, or other applications intended to support or sustain life, or for any other application in which the failure of the SCILLC product could create a situation where personal injury or death may occur. Should Buyer purchase or use SCILLC products for any such unintended or unauthorized application, Buyer shall indemnify and hold SCILLC and its officers, employees, subsidiaries, affiliates, and distributors harmless against all claims, costs, damages, and expenses, and reasonable attorney fees arising out of, directly or indirectly, any claim of personal injury or death associated with such unintended or unauthorized use, even if such claim alleges that SCILLC was negligent regarding the design or manufacture of the part. SCILLC is an Equal Opportunity/Affirmative Action Employer. This literature is subject to all applicable copyright laws and is not for resale in any manner.