Ordering number: EN3977

Monolithic Linear IC

SANYO No. 3977

LA4166M

Recording and Playback System for Microcassette Players

OVERVIEW

The LA4166M is a recording and playback system IC that incorporates an on-chip, motor control governor, making it ideal for use in microcassette and compact cassette recorders.

The LA4166M features single-pin control for selecting recording or playback mode and a recording-mode indicator LED driver. The LA4166M is pin-compatible with the LA4165M.

The LA4166M incorporates a preamplifier, an automatic level control (ALC) circuit and a power amplifier.

The preamplifier functions as both recording microphone amplifier and playback equalization amplifier. The ALC circuit cuts high-level inputs and boosts low-level inputs during recording. The power amplifier outputs 215 mW (typ) into a 4 Ω speaker.

The LA4166M operates from a 1.8 to 3.6 V supply and is available in 24-pin MFPs.

FEATURES

- On-chip, motor control governor
- Single-pin control for selecting recording or playback mode
- Recording-mode indicator LED driver
- Pin-compatible with LA4165M
- Recording and playback preamplifier
- ALC circuit
- Power amplifier
- 215 mW (typ) output power into 4 Ω speaker
- 1.8 to 3.6 V supply
- 24-pin MFP

PINOUT

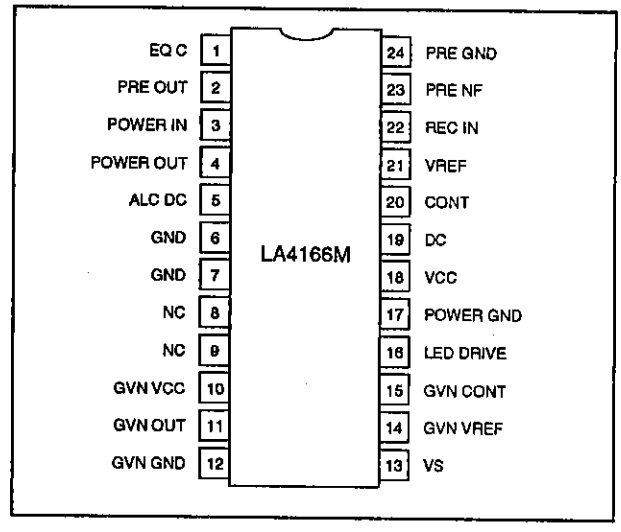

PACKAGE DIMENSIONS

Unit: mm

3108-MFP24D

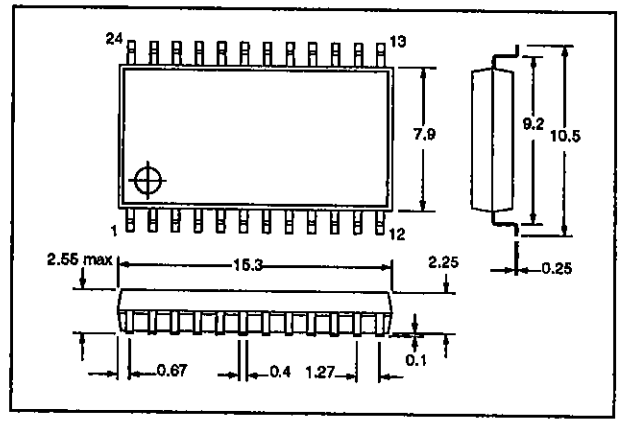

SCHEMATIC DIAGRAM

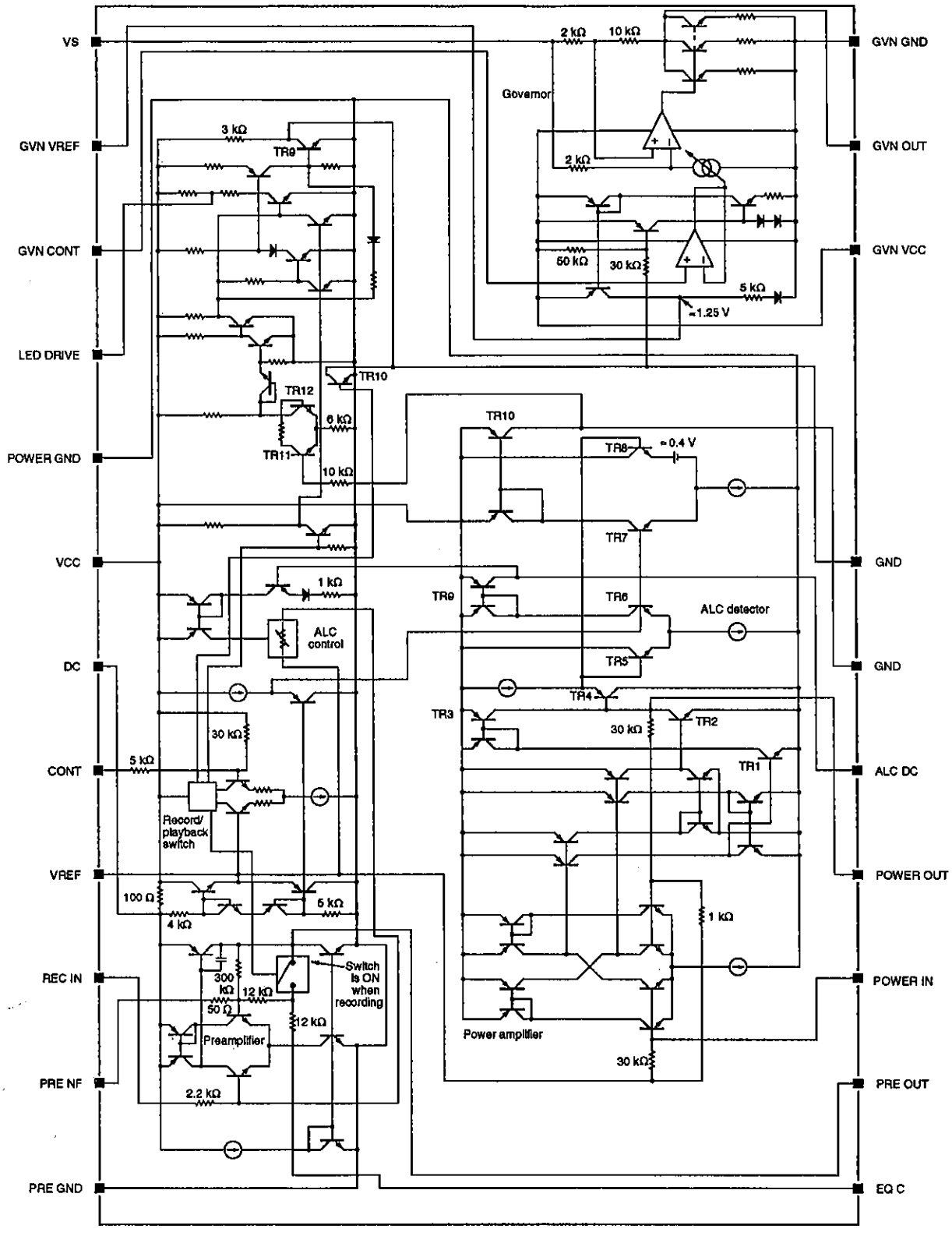

BLOCK DIAGRAM

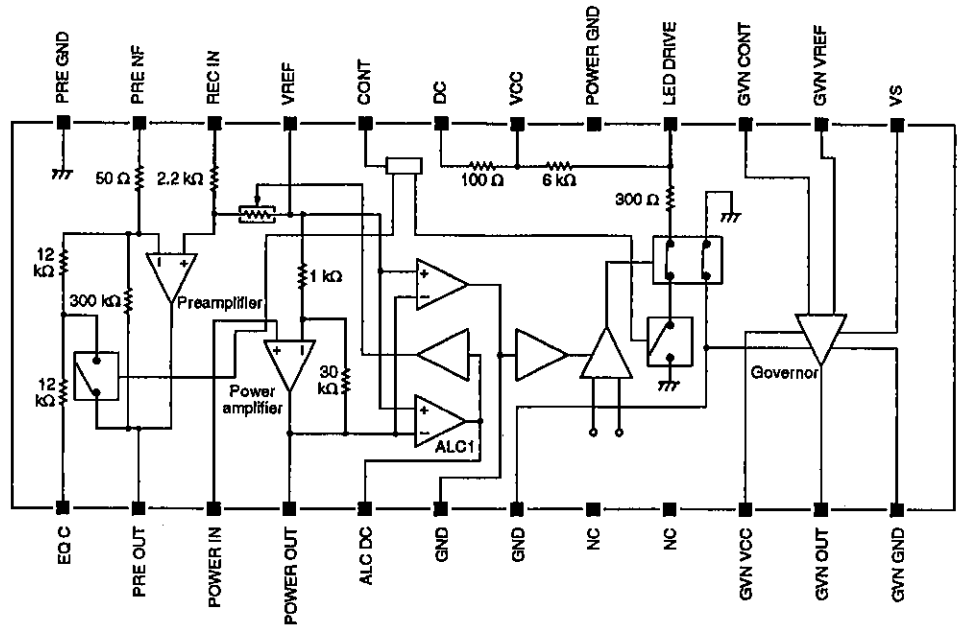

PIN DESCRIPTION

Number	Name	Description
1	EQ C	Playback equalization capacitor connection
2	PRE OUT	Preamplifier output
3	POWER IN	Power amplifier input
4	POWER OUT	Power amplifier output
5	ALC DC	ALC characteristics control network connection
6, 7	GND	Ground
8, 9	NC	No connection
10	GVN VCC	1.8 to 3.6 V governor supply
11	GVN OUT	Governor output
12	GVN GND	Governor ground
13	VS	Motor supply voltage
14	GVN VREF	Governor reference voltage output
15	GVN CONT	Governor control input
16	LED DRIVE	LED driver output
17	POWER GND	Power amplifier ground
18	VCC	1.8 to 3.6 V supply
19	DC	Ripple-filter capacitor connection
20	CONT	Record and playback select input
21	VREF	Reference voltage output
22	REC IN	Recording signal input
23	PRE NF	Preamplifier gain control input
24	PRE GND	Preamplifier ground

SPECIFICATIONS

Absolute Maximum Ratings

Parameter	Symbol	Rating	Unit
Supply voltage	V_{CC}	4.5	V
Power dissipation	P_D	1.1	W
Operating temperature range	T_{opr}	−10 to 50	°C
Storage temperature range	T_{stg}	−55 to 150	°C

Recommended Operating Conditions

T_a = 25 °C

Parameter	Symbol	Rating	Unit
Supply voltage	V_{CC}	3	V
Supply voltage range	V_{CC}	1.8 to 3.6	V
Power amplifier load resistance	R_{L1}	4 (Playback mode)	Ω
		10 (Recording mode)	kΩ
Preamplifier load resistance	R_{L2}	10	kΩ

Electrical Characteristics

V_{CC} = 3 V, T_a = 25 °C, power amplifier R_L = 4 Ω (playback mode) or 10 kΩ (recording mode), preamplifier R_L = 10 kΩ, f = 1 kHz, 0 dBm = 0.775 V unless otherwise noted

Parameter	Symbol	Condition	Rating			Unit
			min	typ	max	
Preamplifier and power amplifier quiescent supply current	I_{CCO}	Recording mode, V_I = 0 V	12	25	38	mA
		Playback mode, V_I = 0 V	13	26	39	
Preamplifier and power amplifier closed-loop voltage gain	V_{G1}	Recording mode, V_O = −5 dBm	62.0	64.5	67.0	dB
		Playback mode, V_O = −5 dBm	71.0	73.5	76.0	
Preamplifier closed-loop voltage gain	V_{G2}	Recording mode, V_O = −10 dBm, R_{NF} = 100 Ω	32.5	35.0	37.5	dB
		Playback mode, V_O = −10 dBm, R_{NF} = 100 Ω	42.5	45.0	47.5	
Preamplifier maximum output voltage	V_O	Playback mode, THD = 1%	0.3	0.6	1.0	V
Preamplifier input noise voltage	V_{NI}	Playback mode, 20 Hz to 20 kHz output bandpass filter	0.5	1.1	2.0	μV
Preamplifier total harmonic distortion	THD_1	Playback mode, V_O = 0.4 V	0.01	0.11	1.0	%
Power amplifier voltage gain	V_{G3}	V_O = −5 dBm, R_L = 4 Ω	26.0	28.5	31.0	dB
Power amplifier output power	P_O	THD = 10%, R_L = 4 Ω	180	215	350	mW
Power amplifier total harmonic distortion	THD_2	P_O = 30 mW, R_L = 4 Ω	0.05	0.5	1.5	%

Parameter	Symbol	Condition	Rating			Unit
			min	typ	max	
Power amplifier output noise voltage	V_{NO}	R_V = 0 Ω, R_L = 4 Ω, 20 Hz to 20 kHz output bandpass filter	5	25	100	μV
ALC turn-ON input voltage	V_I		–66.5	–69.0	–71.5	dBm
ALC range	ALCR	See note 1.	30	38	45	dB
ALC total harmonic distortion	THD_3	$V_{REC\ IN}$ = –40 dBm	0.1	0.67	1.5	%
ALC output voltage	V_O	$V_{REC\ IN}$ = –40 dBm	0.35	0.46	0.55	V
LED driver current	I_{LED}	Using a red LED	1.0	2.5	4.5	mA
Governor reference voltage	$V_{GVN\ REF}$	I_m = 100 mA	1.1	1.25	1.4	V
Governor quiescent input current	I_d	I_m = 100 mA	2	3	6	mA
Governor current divider ratio	K	I_m = 50 to 100 mA	45	50	55	
Governor residual output voltage	V_{sat}	I_m = 200 mA, $V_{GVN\ REF}$ = $V_{GVN\ CONT}$	0.1	0.3	0.5	V
Governor reference voltage vs. supply voltage characteristic		V_{CC} = 1.8 to 4.5 V, I_m = 100 mA. See note 2.	0	0.1	0.5	%/V
Governor current divider ratio vs. supply voltage characteristic		V_{CC} = 2.0 to 4.5 V, I_m = 50 to 100 mA. See note 3.	0	0.1	0.5	%/V
Governor reference voltage ratio vs. output current characteristic		I_m = 50 to 200 mA. See note 4.	0	0.007	0.03	%/mA
Governor current divider ratio vs. output current characteristic		I_m = 50 to 200 mA. See note 5.	–0.05	0.005	0.05	%/mA

Notes

1. Referred to ALC turn-ON voltage, input range for the output level to rise 2.5 dB
2. The characteristic is given by the equation

$$\left(\frac{\Delta V_{GVN\ REF}}{V_{GVN\ REF}}\right) \div \Delta V_{CC}$$

3. The characteristic is given by the equation

$$\left(\frac{\Delta K}{K}\right) \div \Delta V_{CC}$$

4. The characteristic is given by the equation

$$\left(\frac{\Delta V_{GVN\ REF}}{V_{GVN\ REF}}\right) \div \Delta I_m$$

5. The characteristic is given by the equation

$$\left(\frac{\Delta K}{K}\right) \div \Delta I_m$$

Measurement Circuit

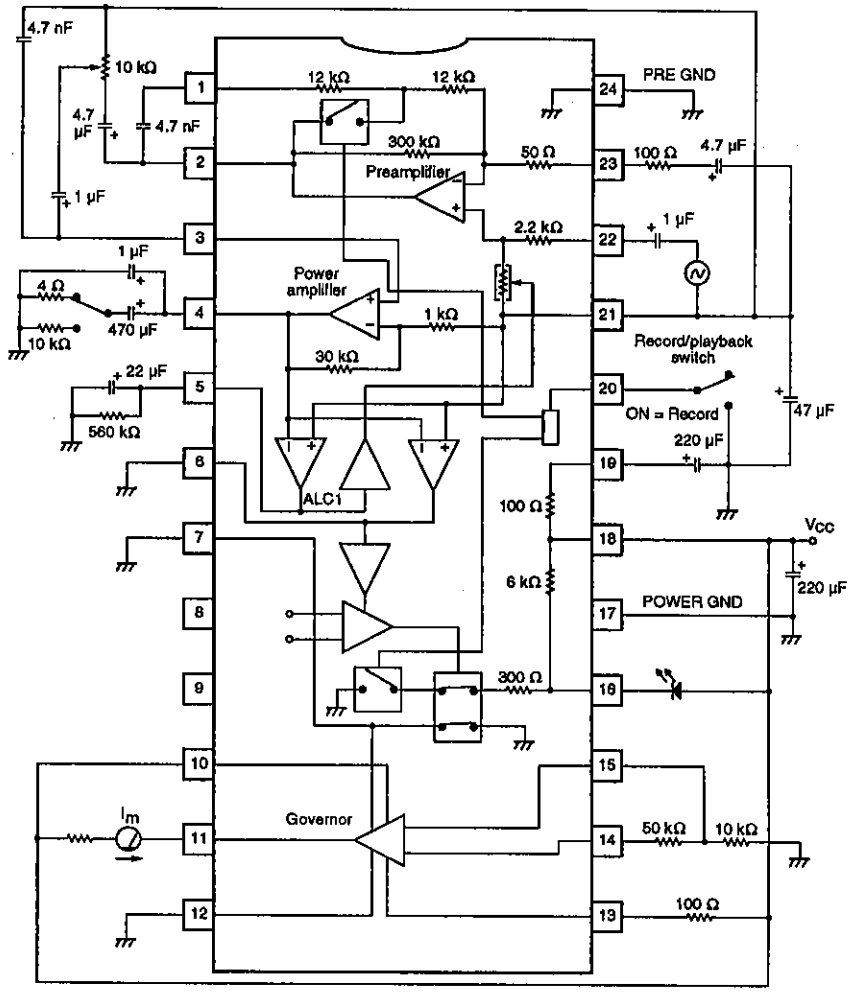

Typical Performance Characteristics

Maximum power dissipation vs. ambient temperature

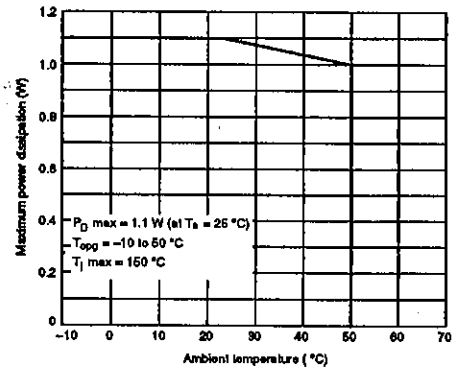

FUNCTIONAL DESCRIPTION

The LA4166M comprises a preamplifier, an ALC, an LED driver, a power amplifier and a governor. The operation of these functional blocks in recording and playback modes is shown in table 1. Recording mode is selected when CONT is held at 0 V, and playback mode, when CONT is open.

Table 1. Block operation

Mode	Preamplifier	ALC	LED driver	Power amplifier	Governor
Recording	ON	ON	ON	ON	ON
Playback	ON	OFF	OFF	ON	ON

TYPICAL APPLICATION

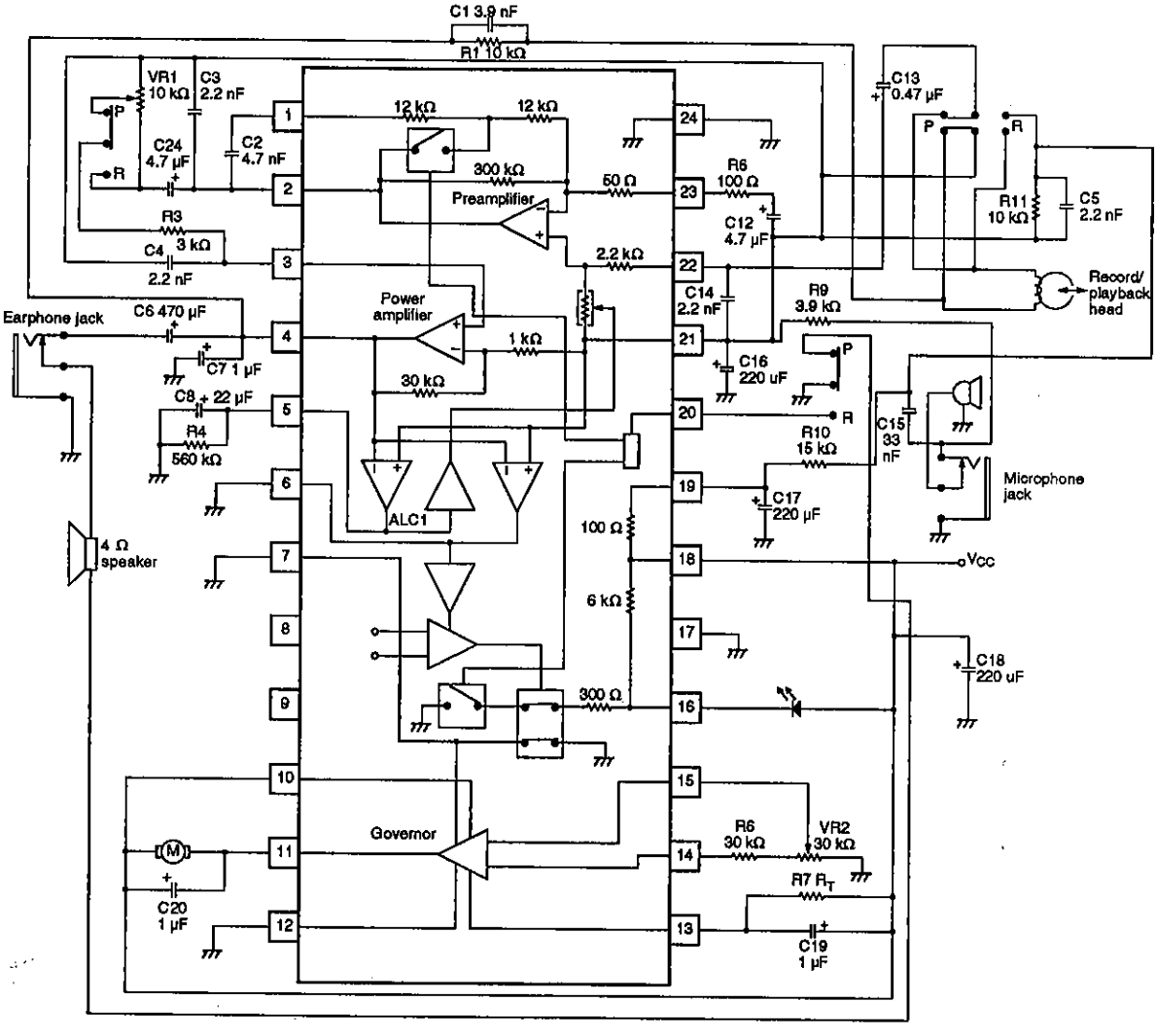

Figure 1. Application circuit

Note that external components are used to determine the LA4166M operating characteristics. For example, C2 determines the playback equalization characteristic, R8 determines the preamplifier gain, C8 and R4 determine the ALC attack and recovery times and C17 determines the power supply ripple rejection. The ripple rejection decreases as the capacitance C17 is decreased.

Other components are used to determine the overall circuit characteristics. For example, C1 and R1 determine the recording current and C7 prevents output oscillations.

Note also that LA4166M internal components determine other LA4166M characteristics. For example, the 2.2 kΩ PRE IN input resistor determines the ALC range, and the 1 kΩ and 30 kΩ resistors at the power amplifier inverting input determine amplifier gain.

In addition, LED DRIVE should be left open when not using the LED indicator function, the double-pole switch that controls LED DRIVE is normally closed, the NC pins should be left open, and the GND pins should be tied to ground.

■ No products described or contained herein are intended for use in surgical implants, life-support systems, aerospace equipment, nuclear power control systems, vehicles, disaster/crime-prevention equipment and the like, the failure of which may directly or indirectly cause injury, death or property loss.

■ Anyone purchasing any products described or contained herein for an above-mentioned use shall:
① Accept full responsibility and indemnify and defend SANYO ELECTRIC CO., LTD., its affiliates, subsidiaries and distributors and all their officers and employees, jointly and severally, against any and all claims and litigation and all damages, cost and expenses associated with such use:
② Not impose any responsibility for any fault or negligence which may be cited in any such claim or litigation on SANYO ELECTRIC CO., LTD., its affiliates, subsidiaries and distributors or any of their officers and employees jointly or severally.

■ Information (including circuit diagrams and circuit parameters) herein is for example only; it is not guaranteed for volume production. SANYO believes information herein is accurate and reliable, but no guarantees are made or implied regarding its use or any infringements of intellectual property rights or other rights of third parties.