L79LxxAB
L79LxxAC - L79LxxC

Negative voltage regulators

Features

- Output current up to 100 mA
- Output voltages of -5; -6; -8; -9; -12; -15 V
- Thermal overload protection
- Short circuit protection
- No external components are required
- Available in either ±5% (AC) or ±10% (C) selection

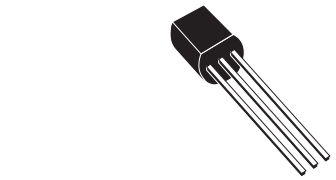

TO-92

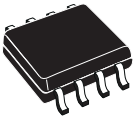

SO-8

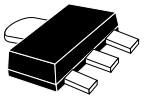

SOT-89

Description

The L79Lxx series of three-terminal negative regulators employ internal current limiting and thermal shutdown, making them essentially indestructible. If adequate heat-sink is provided, they can deliver up to 100 mA output current.

They are intended as fixed voltage regulators in a wide range of applications including local or on-card regulation for elimination of noise and distribution problems associated with single-point regulation. In addition, they can be used with power pass elements to make high-current voltage regulators.

The L79Lxx series used as Zener diode/resistor combination replacement, offers an effective output impedance improvement of typically two orders of magnitude, along with lower quiescent current and lower noise.

Table 1. Device summary

Part numbers	
L79L05AC	L79L09AC
L79L05AB	L79L09AB
L79L06C	L79L12C
L79L06AC	L79L12AC
L79L06AB	L79L12AB
L79L08C	L79L15C
L79L08AC	L79L15AC
L79L08AB	L79L15AB
L79L09C	

Contents

1 Diagram 3

2 Pin configuration 4

3 Maximum ratings 5

4 Electrical characteristics 6

5 Package mechanical data 18

6 Order codes 25

7 Revision history 26

1 Diagram

Figure 1. Schematic diagram

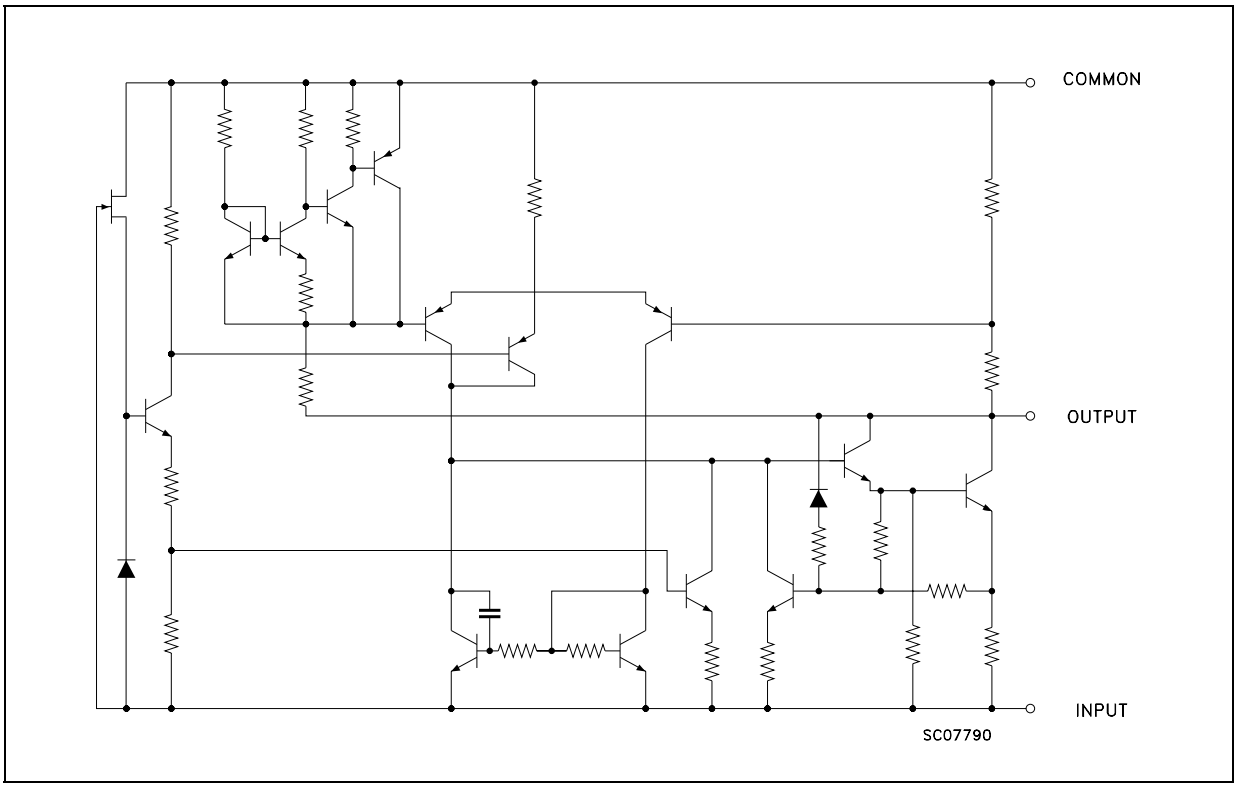

2 Pin configuration

Figure 2. Pin connection (top view, bottom view for TO-92)

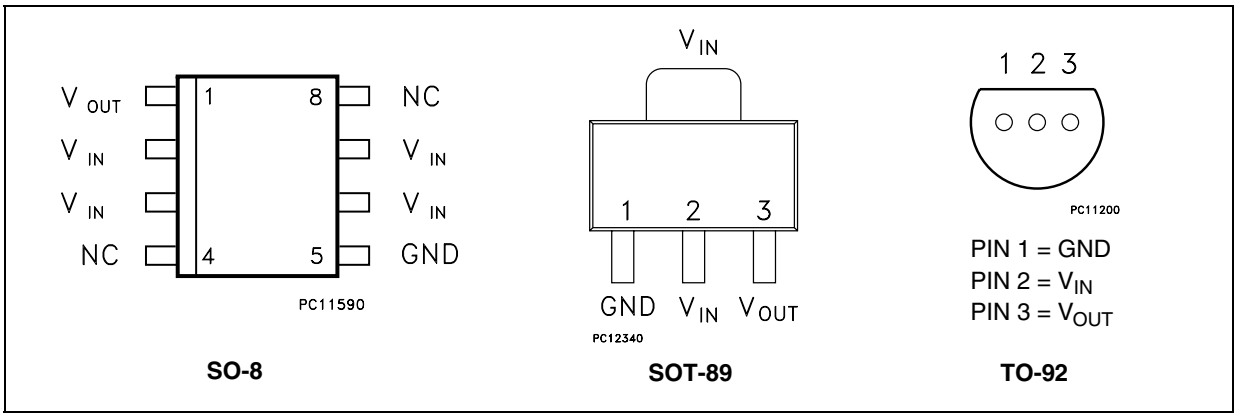

Figure 3. Test circuit

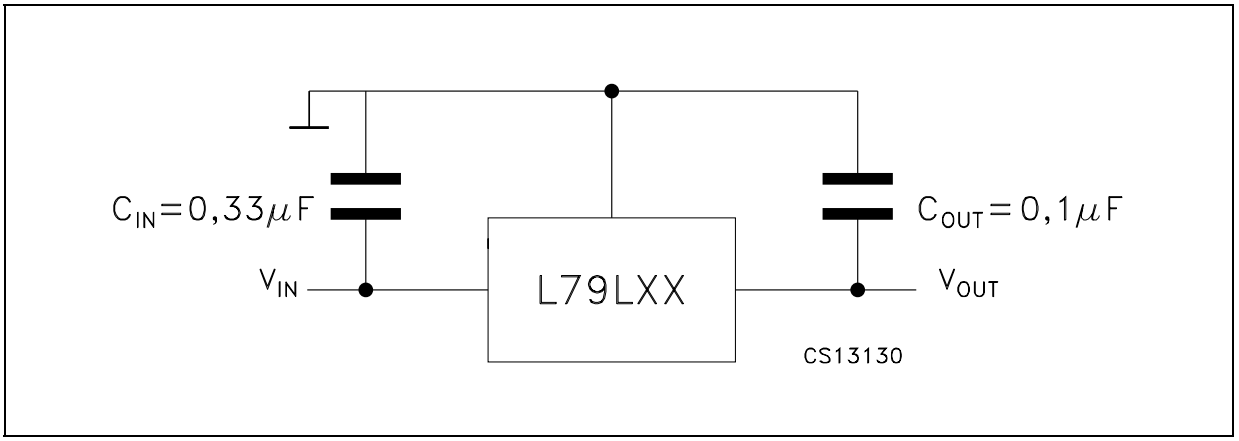

3 Maximum ratings

Table 2. Absolute maximum ratings

Symbol	Parameter		Value	Unit
V_I	DC input voltage	V_O = -5 to -9 V	-30	V
		V_O = -12 to -15 V	-35	
I_O	Output current		100	mA
P_D	Power dissipation		Internally limited (1)	mW
T_{STG}	Storage temperature range		-40 to 150	°C
T_{OP}	Operating junction temperature range	For L79L00C, L79L00AC	0 to 125	°C
		For L79L00AB	-40 to 125	

1. Our SO-8 package used for Voltage Regulators is modified internally to have pins 2, 3, 6 and 7 electrically communed to the die attach flag. This particular frame decreases the total thermal resistance of the package and increases its ability to dissipate power when an appropriate area of copper on the printed circuit board is available for heat-sinking. The external dimensions are the same as for the standard SO-8.

Table 3. Thermal data

Symbol	Parameter	SO-8	TO-92	SOT-89	Unit
R_{thJC}	Thermal resistance junction-case. (Max)	20		15	°C/W
R_{thJA}	Thermal resistance junction-ambient. (Max)	55 (1)	200		°C/W

1. Considering 6 cm^2 of copper Board heat-sink.

4 Electrical characteristics

Refer to the test circuits, T_J = 0 to 125 °C, V_I = -10 V, I_O = 40 mA, C_I = 0.33 µF, C_O = 0.1 µF unless otherwise specified.

Table 4. Electrical characteristics of L79L05

Symbol	Parameter	Test conditions	Min.	Typ.	Max.	Unit
V_O	Output voltage	T_J = 25°C	-4.6	-5	-5.4	V
V_O	Output voltage	I_O = 1 to 40 mA, V_I = -7 to -20 V	-4.5		-5.5	V
		I_O = 1 to 70 mA, V_I = -10 V	-4.5		-5.5	
ΔV_O	Line regulation	V_I = -7 to -20 V, T_J = 25°C			200	mV
		V_I = -8 to -20 V, T_J = 25°C			150	
ΔV_O	Load regulation	I_O = 1 to 100 mA, T_J = 25°C			60	mV
		I_O = 1 to 40 mA, T_J = 25°C			30	
I_d	Quiescent current	T_J = 25°C			6	mA
		T_J = 125°C			5.5	mA
ΔI_d	Quiescent current change	I_O = 1 to 40 mA			0.2	mA
		V_I = -8 to -20 V			1.5	
eN	Output noise voltage	B =10Hz to 100kHz, T_J = 25°C		40		µV
SVR	Supply voltage rejection	V_I = -8 to -18V, f = 120Hz I_O = 40 mA, T_J = 25°C	40	49		dB
V_d	Dropout voltage			1.7		V

Refer to the test circuits, T_J = 0 to 125 °C, V_I = -12 V, I_O = 40 mA, C_I = 0.33 µF, C_O = 0.1 µF unless otherwise specified.

Table 5. Electrical characteristics of L79L06

Symbol	Parameter	Test conditions	Min.	Typ.	Max.	Unit
V_O	Output voltage	T_J = 25°C	-5.52	-6	-6.48	V
V_O	Output voltage	I_O = 1 to 40 mA, V_I = -8.5 to -20 V	-5.4		-6.6	V
		I_O = 1 to 70 mA, V_I = -12 V	-5.4		-6.6	
ΔV_O	Line regulation	V_I = -8.5 to -20 V, T_J = 25°C			200	mV
		V_I = -9 to -20 V, T_J = 25°C			150	
ΔV_O	Load regulation	I_O = 1 to 100 mA, T_J = 25°C			60	mV
		I_O = 1 to 40 mA, T_J = 25°C			30	
I_d	Quiescent current	T_J = 25°C			6	mA
		T_J = 125°C			5.5	mA
ΔI_d	Quiescent current change	I_O = 1 to 40 mA			0.2	mA
		V_I = -8 to -20 V			1.5	
eN	Output noise voltage	B =10Hz to 100kHz, T_J = 25°C		50		µV
SVR	Supply voltage rejection	V_I = -9 to -20V, f = 120Hz I_O = 40 mA, T_J = 25°C	38	46		dB
V_d	Dropout voltage			1.7		V

Refer to the test circuits, T_J = 0 to 125 °C, V_I = -14 V, I_O = 40 mA, C_I = 0.33 µF, C_O = 0.1 µF unless otherwise specified.

Table 6. Electrical characteristics of L79L08

Symbol	Parameter	Test conditions	Min.	Typ.	Max.	Unit
V_O	Output voltage	T_J = 25°C	-7.36	-8	-8.64	V
V_O	Output voltage	I_O = 1 to 40 mA, V_I = -10.5 to -23 V	-7.2		-8.8	V
		I_O = 1 to 70 mA, V_I = -14 V	-7.2		-8.8	
ΔV_O	Line regulation	V_I = -10.5 to -23 V, T_J = 25°C			200	mV
		V_I = -11 to -23 V, T_J = 25°C			150	
ΔV_O	Load regulation	I_O = 1 to 100 mA, T_J = 25°C			80	mV
		I_O = 1 to 40 mA, T_J = 25°C			40	
I_d	Quiescent current	T_J = 25°C			6	mA
		T_J = 125°C			5.5	mA
ΔI_d	Quiescent current change	I_O = 1 to 40 mA			0.2	mA
		V_I = -11 to -23 V			1.5	
eN	Output noise voltage	B =10Hz to 100kHz, T_J = 25°C		60		µV
SVR	Supply voltage rejection	V_I = -12 to -23V, f = 120Hz I_O = 40 mA, T_J = 25°C	36	45		dB
V_d	Dropout voltage			1.7		V

Refer to the test circuits, T_J = 0 to 125 °C, V_I = -15 V, I_O = 40 mA, C_I = 0.33 µF, C_O = 0.1 µF unless otherwise specified.

Table 7. Electrical characteristics of L79L09

Symbol	Parameter	Test conditions	Min.	Typ.	Max.	Unit
V_O	Output voltage	T_J = 25°C	-8.28	-9	-9.72	V
V_O	Output voltage	I_O = 1 to 40 mA, V_I = -11.5 to -23 V	-8.1		-9.9	V
		I_O = 1 to 70 mA, V_I = -15 V	-8.1		-9.9	
ΔV_O	Line regulation	V_I = -11.5 to -23 V, T_J = 25°C			250	mV
		V_I = -12 to -23 V, T_J = 25°C			200	
ΔV_O	Load regulation	I_O = 1 to 100 mA, T_J = 25°C			80	mV
		I_O = 1 to 40 mA, T_J = 25°C			40	
I_d	Quiescent current	T_J = 25°C			6	mA
		T_J = 125°C			5.5	mA
ΔI_d	Quiescent current change	I_O = 1 to 40 mA			0.2	mA
		V_I = -12 to -23 V			1.5	
eN	Output noise voltage	B =10Hz to 100kHz, T_J = 25°C		70		µV
SVR	Supply voltage rejection	V_I = -12 to -23V, f = 120Hz I_O = 40 mA, T_J = 25°C	36	44		dB
V_d	Dropout voltage			1.7		V

Refer to the test circuits, T_J = 0 to 125 °C, V_I = - 19 V, I_O = 40 mA, C_I = 0.33 µF, C_O = 0.1 µF unless otherwise specified.

Table 8. Electrical characteristics of L79L12

Symbol	Parameter	Test conditions	Min.	Typ.	Max.	Unit
V_O	Output voltage	T_J = 25°C	-11.1	-12	-12.9	V
V_O	Output voltage	I_O = 1 to 40 mA, V_I = -14.5 to -27 V	-10.8		-13.2	V
		I_O = 1 to 70 mA, V_I = -19 V	-10.8		-13.2	
ΔV_O	Line regulation	V_I = -14.5 to -27 V, T_J = 25°C			250	mV
		V_I = -16 to -27 V, T_J = 25°C			200	
ΔV_O	Load regulation	I_O = 1 to 100 mA, T_J = 25°C			100	mV
		I_O = 1 to 40 mA, T_J = 25°C			50	
I_d	Quiescent current	T_J = 25°C			6.5	mA
		T_J = 125°C			6	mA
ΔI_d	Quiescent current change	I_O = 1 to 40 mA			0.2	mA
		V_I = -16 to -27 V			1.5	
eN	Output noise voltage	B =10Hz to 100kHz, T_J = 25°C		80		µV
SVR	Supply voltage rejection	V_I = -15 to -25V, f = 120Hz I_O = 40 mA, T_J = 25°C	36	42		dB
V_d	Dropout voltage			1.7		V

Refer to the test circuits, T_J = 0 to 125 °C, V_I = - 23 V, I_O = 40 mA, C_I = 0.33 µF, C_O = 0.1 µF unless otherwise specified.

Table 9. Electrical characteristics of L79L15

Symbol	Parameter	Test conditions	Min.	Typ.	Max.	Unit
V_O	Output voltage	T_J = 25°C	-13.8	-15	-16.2	V
V_O	Output voltage	I_O = 1 to 40 mA, V_I = -17.5 to -30 V	-13.5		-16.5	V
		I_O = 1 to 70 mA, V_I = -23 V	-13.5		-16.5	
ΔV_O	Line regulation	V_I = -17.5 to -30 V, T_J = 25°C			300	mV
		V_I = -20 to -30 V, T_J = 25°C			250	
ΔV_O	Load regulation	I_O = 1 to 100 mA, T_J = 25°C			150	mV
		I_O = 1 to 40 mA, T_J = 25°C			75	
I_d	Quiescent current	T_J = 25°C			6.5	mA
		T_J = 125°C			6	mA
ΔI_d	Quiescent current change	I_O = 1 to 40 mA			0.2	mA
		V_I = -20 to -30 V			1.5	
eN	Output noise voltage	B =10Hz to 100kHz, T_J = 25°C		90		µV
SVR	Supply voltage rejection	V_I = -18.5 to -28.5.V, f = 120Hz I_O = 40 mA, T_J = 25°C	33	39		dB
V_d	Dropout voltage			1.7		V

Refer to the test circuits, V_I = - 10 V, I_O = 40 mA, C_I = 0.33 µF, C_O = 0.1 µF, T_J = 0 to 125 °C for L79L05AC, T_J = -40 to 125 °C for L79L05AB, unless otherwise specified.

Table 10. Electrical characteristics of L79L05AB and L79L05AC

Symbol	Parameter	Test conditions	Min.	Typ.	Max.	Unit
V_O	Output voltage	T_J = 25°C	-4.8	-5	-5.2	V
V_O	Output voltage	I_O = 1 to 40 mA, V_I = -7 to -20 V	-4.75		-5.25	V
		I_O = 1 to 70 mA, V_I = -10 V	-4.75		-5.25	
ΔV_O	Line regulation	V_I = -7 to -20 V, T_J = 25°C			150	mV
		V_I = -8 to -20 V, T_J = 25°C			100	
ΔV_O	Load regulation	I_O = 1 to 100 mA, T_J = 25°C			60	mV
		I_O = 1 to 40 mA, T_J = 25°C			30	
I_d	Quiescent current	T_J = 25°C			6	mA
		T_J = 125°C			5.5	mA
ΔI_d	Quiescent current change	I_O = 1 to 40 mA			0.1	mA
		V_I = -8 to -20 V			1.5	
eN	Output noise voltage	B =10Hz to 100kHz, T_J = 25°C		40		µV
SVR	Supply voltage rejection	V_I = -8 to -18V, f = 120Hz I_O = 40 mA, T_J = 25°C	41	49		dB
V_d	Dropout voltage			1.7		V

Refer to the test circuits, V_I = - 12 V, I_O = 40 mA, C_I = 0.33 µF, C_O = 0.1 µF, T_J = 0 to 125 °C for L79L05AC, T_J = -40 to 125 °C for L79L05AB, unless otherwise specified.

Table 11. Electrical characteristics of L79L06AB and L79L06AC

Symbol	Parameter	Test conditions	Min.	Typ.	Max.	Unit
V_O	Output voltage	T_J = 25°C	-5.76	-6	-6.24	V
V_O	Output voltage	I_O = 1 to 40 mA, V_I = -8.5 to -20 V	-5.7		-6.3	V
		I_O = 1 to 70 mA, V_I = -12 V	-5.7		-6.3	
ΔV_O	Line regulation	V_I = -8.5 to -20 V, T_J = 25°C			150	mV
		V_I = -9 to -20 V, T_J = 25°C			100	
ΔV_O	Load regulation	I_O = 1 to 100 mA, T_J = 25°C			60	mV
		I_O = 1 to 40 mA, T_J = 25°C			30	
I_d	Quiescent current	T_J = 25°C			6	mA
		T_J = 125°C			5.5	mA
ΔI_d	Quiescent current change	I_O = 1 to 40 mA			0.1	mA
		V_I = -8 to -20 V			1.5	
eN	Output noise voltage	B =10Hz to 100kHz, T_J = 25°C		50		µV
SVR	Supply voltage rejection	V_I = -9 to -20V, f = 120Hz I_O = 40 mA, T_J = 25°C	39	46		dB
V_d	Dropout voltage			1.7		V

Refer to the test circuits, V_I = - 14 V, I_O = 40 mA, C_I = 0.33 µF, C_O = 0.1 µF, T_J = 0 to 125 °C for L79L05AC, T_J = -40 to 125 °C for L79L05AB, unless otherwise specified.

Table 12. Electrical characteristics of L79L08AB and L79L08AC

Symbol	Parameter	Test conditions	Min.	Typ.	Max.	Unit
V_O	Output voltage	T_J = 25°C	-7.68	-8	-8.32	V
V_O	Output voltage	I_O = 1 to 40 mA, V_I = -10.5 to -23 V	-7.6		-8.4	V
		I_O = 1 to 70 mA, V_I = -14 V	-7.6		-8.4	
ΔV_O	Line regulation	V_I = -10.5 to -23 V, T_J = 25°C			175	mV
		V_I = -11 to -23 V, T_J = 25°C			125	
ΔV_O	Load regulation	I_O = 1 to 100 mA, T_J = 25°C			80	mV
		I_O = 1 to 40 mA, T_J = 25°C			40	
I_d	Quiescent current	T_J = 25°C			6	mA
		T_J = 125°C			5.5	mA
ΔI_d	Quiescent current change	I_O = 1 to 40 mA			0.1	mA
		V_I = -11 to -23 V			1.5	
eN	Output noise voltage	B =10Hz to 100kHz, T_J = 25°C		60		µV
SVR	Supply voltage rejection	V_I = -12 to -23V, f = 120Hz I_O = 40 mA, T_J = 25°C	37	45		dB
V_d	Dropout voltage			1.7		V

Refer to the test circuits, V_I = - 15 V, I_O = 40 mA, C_I = 0.33 µF, C_O = 0.1 µF, T_J = 0 to 125 °C for L79L05AC, T_J = -40 to 125 °C for L79L05AB, unless otherwise specified.

Table 13. Electrical characteristics of L79L09AB and L79L09AC

Symbol	Parameter	Test conditions	Min.	Typ.	Max.	Unit
V_O	Output voltage	T_J = 25°C	-8.64	-9	-9.36	V
V_O	Output voltage	I_O = 1 to 40 mA, V_I = -11.5 to -23 V	-8.55		-9.45	V
		I_O = 1 to 70 mA, V_I = -15 V	-8.55		-9.45	
ΔV_O	Line regulation	V_I = -11.5 to -23 V, T_J = 25°C			225	mV
		V_I = -12 to -23 V, T_J = 25°C			150	
ΔV_O	Load regulation	I_O = 1 to 100 mA, T_J = 25°C			80	mV
		I_O = 1 to 40 mA, T_J = 25°C			40	
I_d	Quiescent current	T_J = 25°C			6	mA
		T_J = 125°C			5.5	mA
ΔI_d	Quiescent current change	I_O = 1 to 40 mA			0.1	mA
		V_I = -12 to -23 V			1.5	
eN	Output noise voltage	B =10Hz to 100kHz, T_J = 25°C		70		µV
SVR	Supply voltage rejection	V_I = -12 to -23V, f = 120Hz I_O = 40 mA, T_J = 25°C	37	44		dB
V_d	Dropout voltage			1.7		V

Refer to the test circuits, V_I = - 19 V, I_O = 40 mA, C_I = 0.33 µF, C_O = 0.1 µF, T_J = 0 to 125 °C for L79L05AC, T_J = -40 to 125 °C for L79L05AB, unless otherwise specified.

Table 14. Electrical characteristics of L79L12AB and L79L12AC

Symbol	Parameter	Test conditions	Min.	Typ.	Max.	Unit
V_O	Output voltage	T_J = 25°C	-11.5	-12	-12.5	V
V_O	Output voltage	I_O = 1 to 40 mA, V_I = -14.5 to -27 V	-11.4		-12.6	V
		I_O = 1 to 70 mA, V_I = -19 V	-11.4		-12.6	
ΔV_O	Line regulation	V_I = -14.5 to -27 V, T_J = 25°C			250	mV
		V_I = -16 to -27 V, T_J = 25°C			200	
ΔV_O	Load regulation	I_O = 1 to 100 mA, T_J = 25°C			100	mV
		I_O = 1 to 40 mA, T_J = 25°C			50	
I_d	Quiescent current	T_J = 25°C			6.5	mA
		T_J = 125°C			6	mA
ΔI_d	Quiescent current change	I_O = 1 to 40 mA			0.1	mA
		V_I = -16 to -27 V			1.5	
eN	Output noise voltage	B =10Hz to 100kHz, T_J = 25°C		80		µV
SVR	Supply voltage rejection	V_I = -15 to -25V, f = 120Hz I_O = 40 mA, T_J = 25°C	37	42		dB
V_d	Dropout voltage			1.7		V

Refer to the test circuits, V_I = - 23 V, I_O = 40 mA, C_I = 0.33 µF, C_O = 0.1 µF, T_J = 0 to 125 °C for L79L05AC, T_J = -40 to 125 °C for L79L05AB, unless otherwise specified.

Table 15. Electrical characteristics of L79L15AB and L79L15AC

Symbol	Parameter	Test conditions	Min.	Typ.	Max.	Unit
V_O	Output voltage	T_J = 25°C	-14.4	-15	-15.6	V
V_O	Output voltage	I_O = 1 to 40 mA, V_I = -17.5 to -30 V	-14.25		-15.75	V
		I_O = 1 to 70 mA, V_I = -23 V	-14.25		-15.75	
ΔV_O	Line regulation	V_I = -17.5 to -30 V, T_J = 25°C			300	mV
		V_I = -20 to -30 V, T_J = 25°C			250	
ΔV_O	Load regulation	I_O = 1 to 100 mA, T_J = 25°C			150	mV
		I_O = 1 to 40 mA, T_J = 25°C			75	
I_d	Quiescent current	T_J = 25°C			6.5	mA
		T_J = 125°C			6	mA
ΔI_d	Quiescent current change	I_O = 1 to 40 mA			0.1	mA
		V_I = -20 to -30 V			1.5	
eN	Output noise voltage	B =10Hz to 100kHz, T_J = 25°C		90		µV
SVR	Supply voltage rejection	V_I = -18.5 to -28.5.V, f = 120Hz I_O = 40 mA, T_J = 25°C	34	39		dB
V_d	Dropout voltage			1.7		V

5 Package mechanical data

In order to meet environmental requirements, ST offers these devices in different grades of ECOPACK® packages, depending on their level of environmental compliance. ECOPACK® specifications, grade definitions and product status are available at: *www.st.com*.
ECOPACK® is an ST trademark.

SO-8 mechanical data

Dim.	mm.			inch.		
	Min.	Typ.	Max.	Min.	Typ.	Max.
A	1.35		1.75	0.053		0.069
A1	0.10		0.25	0.04		0.010
A2	1.10		1.65	0.043		0.065
B	0.33		0.51	0.013		0.020
C	0.19		0.25	0.007		0.010
D	4.80		5.00	0.189		0.197
E	3.80		4.00	0.150		0.157
e		1.27			0.050	
H	5.80		6.20	0.228		0.244
h	0.25		0.50	0.010		0.020
L	0.40		1.27	0.016		0.050
k	8° (max.)					
ddd			0.1			0.04

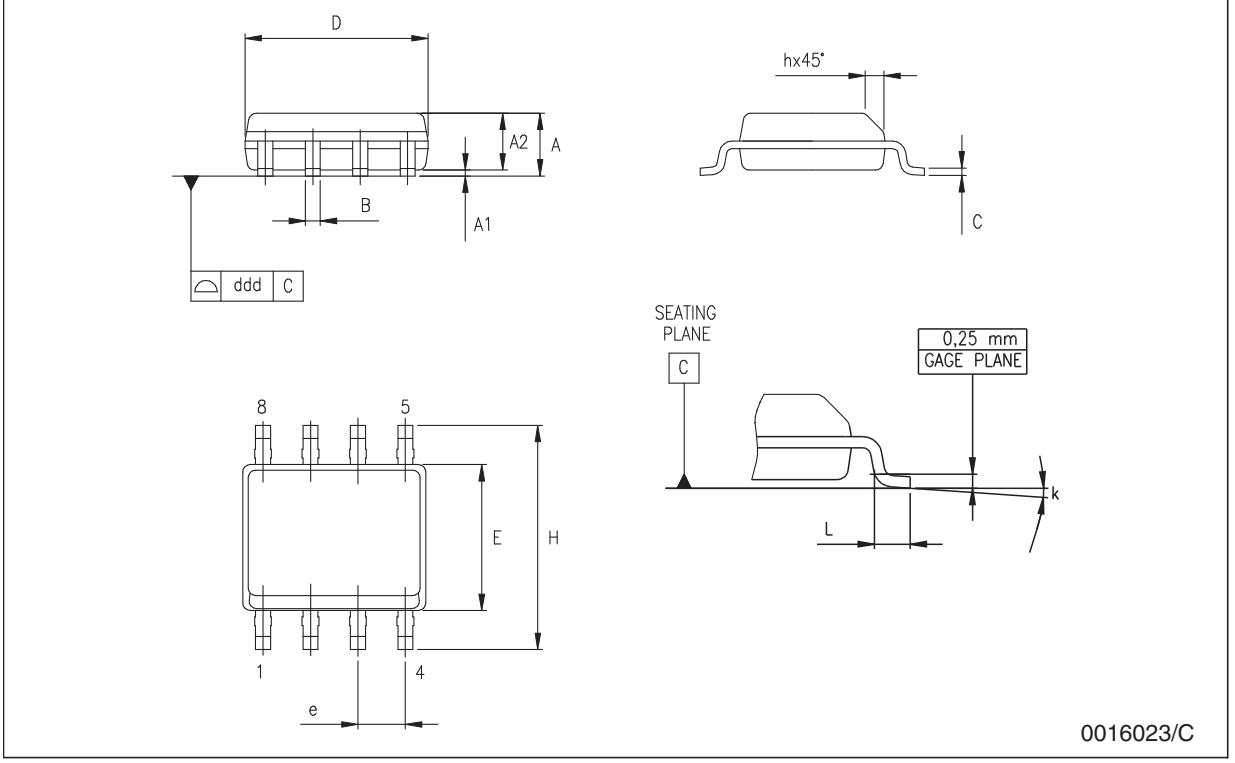

SOT-89 mechanical data

Dim.	mm.			mils.		
	Min.	Typ.	Max.	Min.	Typ.	Max.
A	1.4		1.6	55.1		63.0
B	0.44		0.56	17.3		22.0
B1	0.36		0.48	14.2		18.9
C	0.35		0.44	13.8		17.3
C1	0.35		0.44	13.8		17.3
D	4.4		4.6	173.2		181.1
D1	1.62		1.83	63.8		72.0
E	2.29		2.6	90.2		102.4
e	1.42		1.57	55.9		61.8
e1	2.92		3.07	115.0		120.9
H	3.94		4.25	155.1		167.3
L	0.89		1.2	35.0		47.2

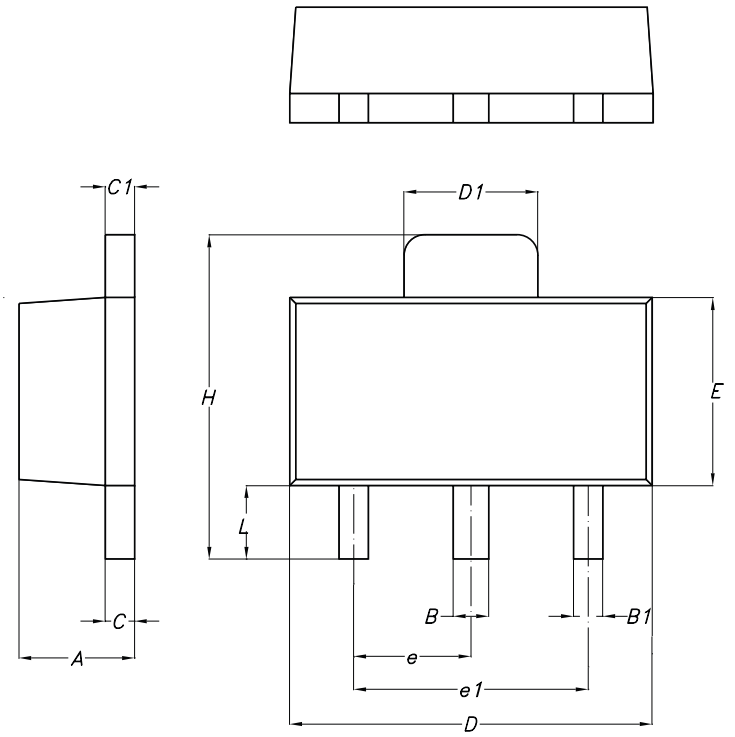

P025H

TO-92 mechanical data

Dim.	mm.			mils.		
	Min.	Typ.	Max.	Min.	Typ.	Max.
A	4.32		4.95	170.1		194.9
b	0.36		0.51	14.2		20.1
D	4.45		4.95	175.2		194.9
E	3.30		3.94	129.9		155.1
e	2.41		2.67	94.9		105.1
e1	1.14		1.40	44.9		55.1
L	12.7		15.49	500.0		609.8
R	2.16		2.41	85.0		94.9
S1	0.92		1.52	36.2		59.8
W	0.41		0.56	16.1		22.0
α		5°			5°	

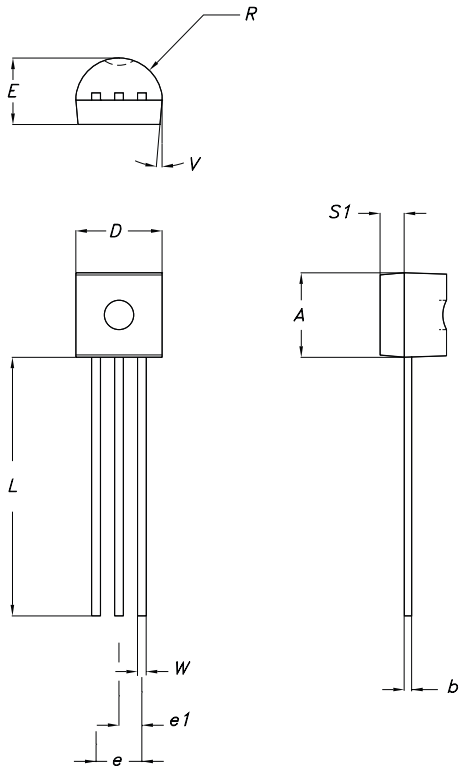

0102782/D

Tape & reel SO-8 mechanical data

Dim.	mm.			inch.		
	Min.	Typ.	Max.	Min.	Typ.	Max.
A			330			12.992
C	12.8		13.2	0.504		0.519
D	20.2			0.795		
N	60			2.362		
T			22.4			0.882
Ao	8.1		8.5	0.319		0.335
Bo	5.5		5.9	0.216		0.232
Ko	2.1		2.3	0.082		0.090
Po	3.9		4.1	0.153		0.161
P	7.9		8.1	0.311		0.319

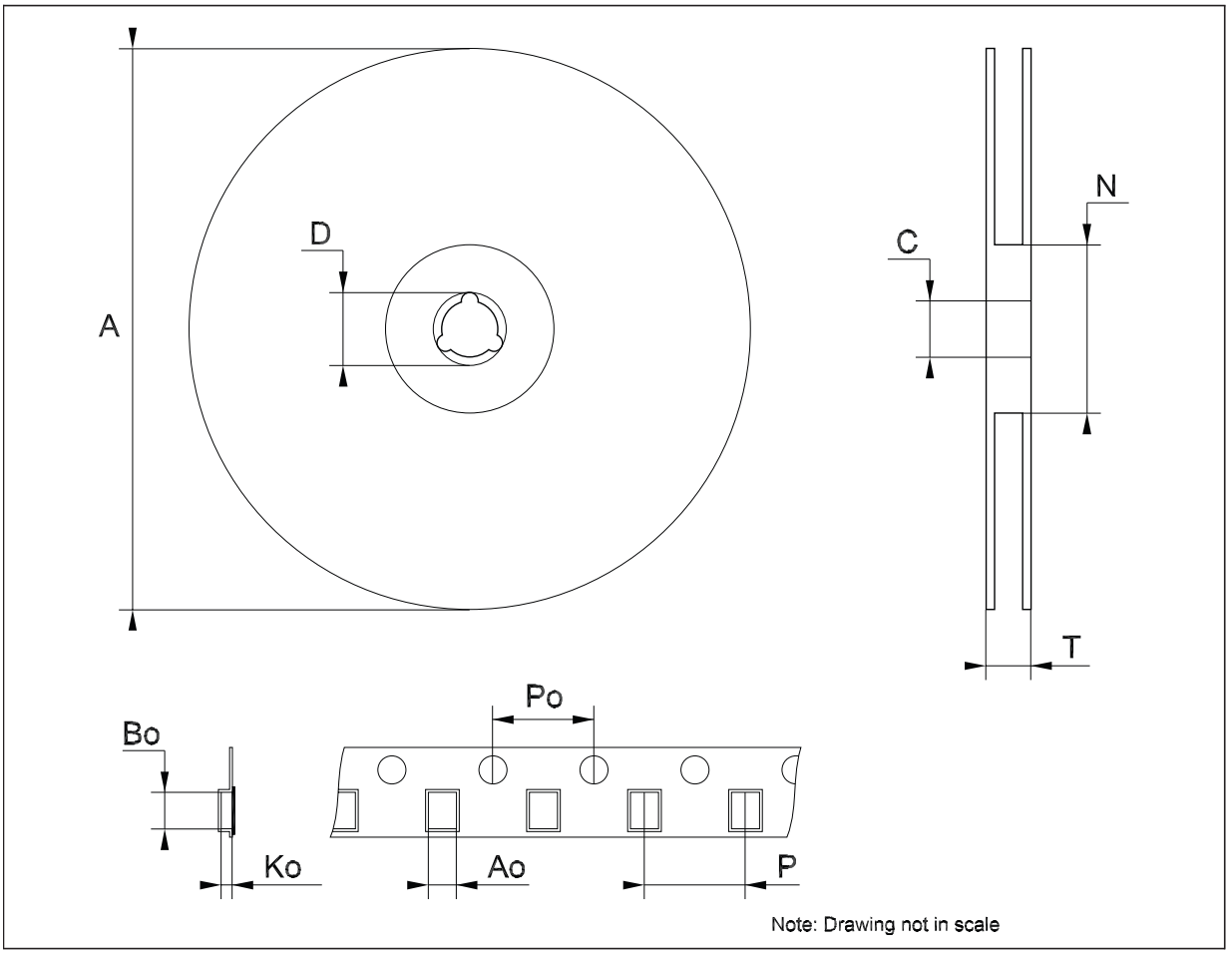

Note: Drawing not in scale

Tape & reel SOT-89 mechanical data

Dim.	mm.			inch.		
	Min.	Typ.	Max.	Min.	Typ.	Max.
A			180			7.086
C	12.8	13.0	13.2	0.504	0.512	0.519
D	20.2			0.795		
N	60			2.362		
T			14.4			0.567
Ao	4.70	4.80	4.90	0.185	0.189	0.193
Bo	4.30	4.40	4.50	0.169	0.173	0.177
Ko	1.70	1.80	1.90	0.067	0.071	0.075
Po	3.9	4.0	4.1	0.153	0.157	0.161
P	7.9	8.0	8.1	0.311	0.315	0.319

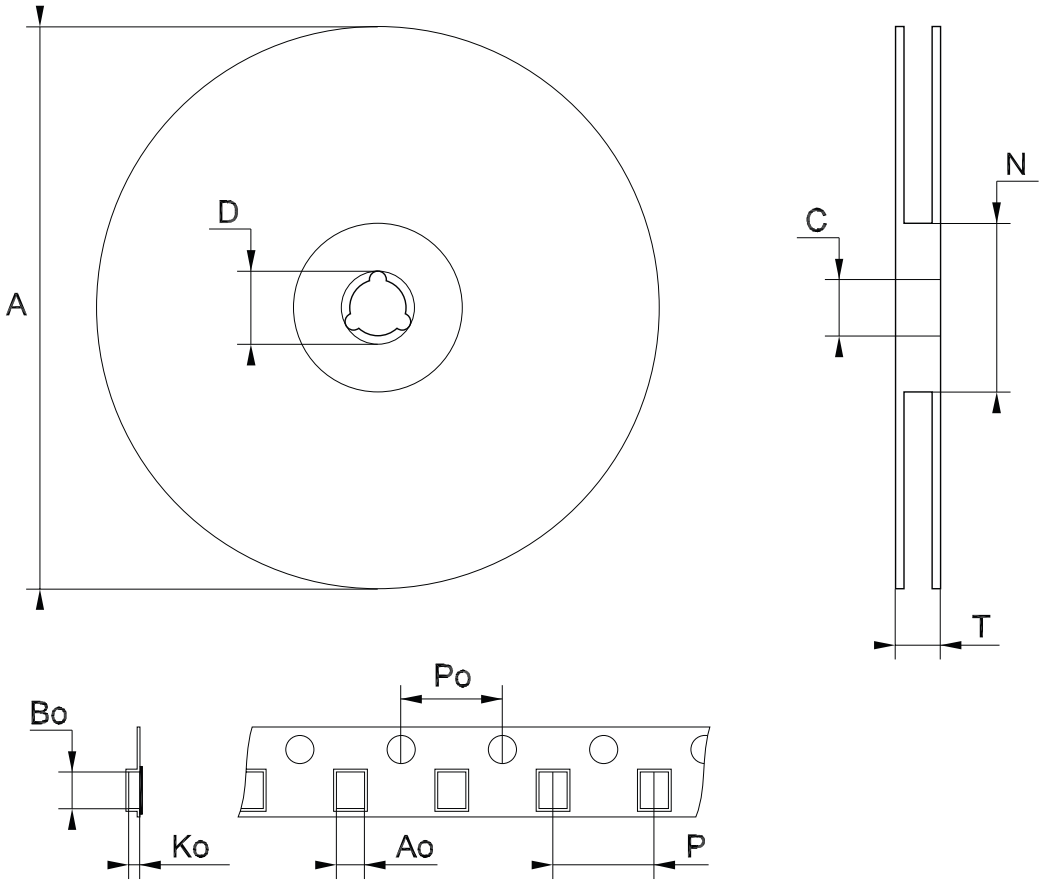

Note: Drawing not in scale

Tape & reel for TO-92 mechanical data

Dim.	mm.			inch.		
	Min.	Typ.	Max.	Min.	Typ.	Max.
A1		4.80			0.189	
T		3.80			0.150	
T1		1.60			0.063	
T2		2.30			0.091	
d		0.48			0.019	
P0	12.5		12.9	0.492		0.508
P2	5.65		7.05	0.222		0.278
F1, F2	2.44	2.54	2.94	0.096	0.100	0.116
delta H		±2			0.079	
W	17.5	18.00	19.0	0.689	0.709	0.748
W0	5.7		6.3	0.224		0.248
W1	8.5		9.25	0.335		0.364
W2		0.50			0.20	
H		18.50	18.70		0.728	0.726
H0	15.50		16.50	0.610		0.650
H1		25.00			0.984	
D0	3.8		4.2	0.150		0.165
t		0.90			0.035	
L1		3			0.118	
delta P		±1			0.039	
u		50			1.968	
Φ1		360			14.173	
Φ2		30			1.181	

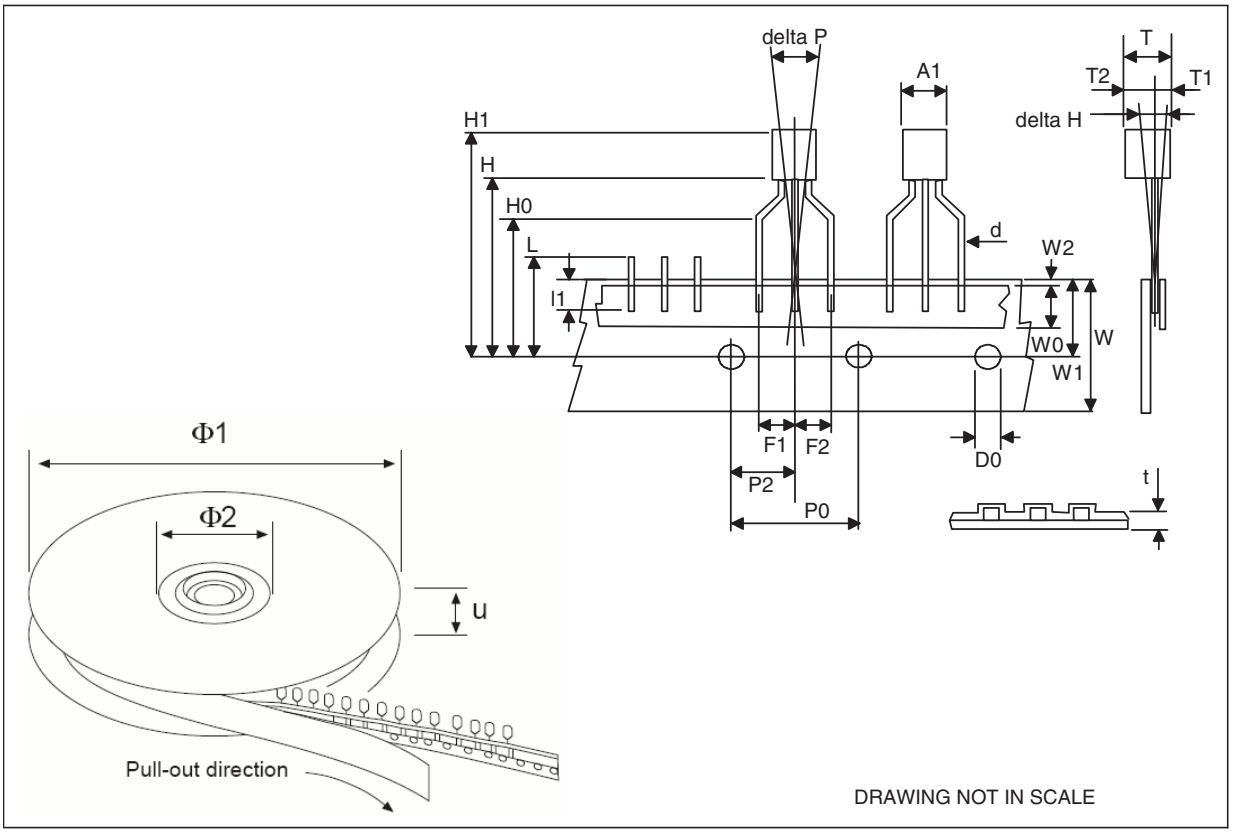

6 Order codes

Table 16. Order codes

Packaging			Output voltage
SO-8	TO92 (BAG) (1)	SOT-89	
L79L05ACD13TR	L79L05ACZ	L79L05ACUTR	-5 V
L79L05ABD13TR	L79L05ABZ	L79L05ABUTR	-5 V
L79L06CD13TR (2)			-6 V
L79L06ACD13TR	L79L06ACZ		-6 V
L79L06ABD13TR (2)	L79L06ABZ	L79L06ABUTR	-6 V
L79L08CD13TR (2)			-8 V
L79L08ACD13TR	L79L08ACZ	L79L08ACUTR (2)	-8 V
L79L08ABD13TR (2)	L79L08ABZ (2)	L79L08ABUTR (2)	-8 V
L79L09CD13TR (2)			-9 V
L79L09ACD13TR (2)	L79L09ACZ	L79L09ACUTR	-9 V
L79L09ABD13TR (2)	L79L09ABZ (2)	L79L09ABUTR (2)	-9 V
L79L12CD13TR (2)			-12 V
L79L12ACD13TR	L79L12ACZ	L79L12ACUTR	-12 V
L79L12ABD13TR (2)	L79L12ABZ (2)	L79L12ABUTR (2)	-12 V
L79L15CD13TR (2)			-15 V
L79L15ACD13TR		L79L15ACUTR	-15 V
L79L15ABD13TR	L79L15ABZ (2)		-15 V

1. Available in Ammopak with the suffix "-AP" or in Tape & Reel with the suffix "TR". Please note that in these cases pins are shaped according to Tape & Reel specifications.
2. Available on request.

7 Revision history

Table 17. Document revision history

Date	Revision	Changes
14-Mar-2005	9	Add Tape & Reel for TO-92.
15-Mar-2005	10	Add note on Table 3.
23-Dec-2005	11	Mistake on ordering Table in Header.
12-Sep-2006	12	Order codes updated.
25-Jul-2007	13	Pin connection for SOT-89 updated on *Figure 2*, add *Table 1* in cover page.
04-Dec-2007	14	Modified: *Table 16*.
14-Jul-2008	15	Modified: *Table 16 on page 25*.
29-Jul-2009	16	Modified: *Table 16 on page 25*.

Please Read Carefully:

Information in this document is provided solely in connection with ST products. STMicroelectronics NV and its subsidiaries (“ST”) reserve the right to make changes, corrections, modifications or improvements, to this document, and the products and services described herein at any time, without notice.

All ST products are sold pursuant to ST’s terms and conditions of sale.

Purchasers are solely responsible for the choice, selection and use of the ST products and services described herein, and ST assumes no liability whatsoever relating to the choice, selection or use of the ST products and services described herein.

No license, express or implied, by estoppel or otherwise, to any intellectual property rights is granted under this document. If any part of this document refers to any third party products or services it shall not be deemed a license grant by ST for the use of such third party products or services, or any intellectual property contained therein or considered as a warranty covering the use in any manner whatsoever of such third party products or services or any intellectual property contained therein.

UNLESS OTHERWISE SET FORTH IN ST’S TERMS AND CONDITIONS OF SALE ST DISCLAIMS ANY EXPRESS OR IMPLIED WARRANTY WITH RESPECT TO THE USE AND/OR SALE OF ST PRODUCTS INCLUDING WITHOUT LIMITATION IMPLIED WARRANTIES OF MERCHANTABILITY, FITNESS FOR A PARTICULAR PURPOSE (AND THEIR EQUIVALENTS UNDER THE LAWS OF ANY JURISDICTION), OR INFRINGEMENT OF ANY PATENT, COPYRIGHT OR OTHER INTELLECTUAL PROPERTY RIGHT.

UNLESS EXPRESSLY APPROVED IN WRITING BY AN AUTHORIZED ST REPRESENTATIVE, ST PRODUCTS ARE NOT RECOMMENDED, AUTHORIZED OR WARRANTED FOR USE IN MILITARY, AIR CRAFT, SPACE, LIFE SAVING, OR LIFE SUSTAINING APPLICATIONS, NOR IN PRODUCTS OR SYSTEMS WHERE FAILURE OR MALFUNCTION MAY RESULT IN PERSONAL INJURY, DEATH, OR SEVERE PROPERTY OR ENVIRONMENTAL DAMAGE. ST PRODUCTS WHICH ARE NOT SPECIFIED AS "AUTOMOTIVE GRADE" MAY ONLY BE USED IN AUTOMOTIVE APPLICATIONS AT USER’S OWN RISK.

Resale of ST products with provisions different from the statements and/or technical features set forth in this document shall immediately void any warranty granted by ST for the ST product or service described herein and shall not create or extend in any manner whatsoever, any liability of ST.

ST and the ST logo are trademarks or registered trademarks of ST in various countries.

Information in this document supersedes and replaces all information previously supplied.

The ST logo is a registered trademark of STMicroelectronics. All other names are the property of their respective owners.

© 2009 STMicroelectronics - All rights reserved

STMicroelectronics group of companies

Australia - Belgium - Brazil - Canada - China - Czech Republic - Finland - France - Germany - Hong Kong - India - Israel - Italy - Japan - Malaysia - Malta - Morocco - Philippines - Singapore - Spain - Sweden - Switzerland - United Kingdom - United States of America

www.st.com