L78MxxC

Positive voltage regulators

Features

- Output current to 0.5 A
- Output voltages of 5; 6; 8; 9; 12; 15; 18; 24 V
- Thermal overload protection
- Short circuit protection
- Output transition SOA protection

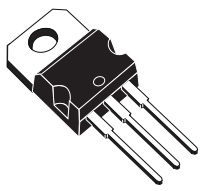

TO-220

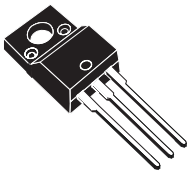

TO-220FP

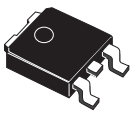

DPAK

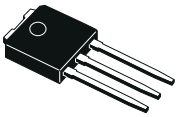

IPAK

Description

The L78Mxx series of three-terminal positive regulators is available in TO-220, TO-220FP, DPAK and IPAK packages and with several fixed output voltages, making it useful in a wide range of applications. These regulators can provide local on-card regulation, eliminating the distribution problems associated with single point regulation. Each type employs internal current limiting, thermal shut-down and safe area protection, making it essentially indestructible. If adequate heat sinking is provided, they can deliver over 0.5 A output current. Although designed primarily as fixed voltage regulators, these devices can be used with external components to obtain adjustable voltage and currents.

Table 1. Device summary

Part numbers	
L78M05C	L78M12C
L78M06C	L78M15C
L78M08C	L78M18C
L78M09C	L78M24C

Contents

1 Diagram 3

2 Pin configuration 4

3 Maximum ratings 5

4 Test circuits 6

5 Electrical characteristics 7

6 Typical performance 11

7 Package mechanical data 17

8 Order codes 27

9 Revision history 28

1 Diagram

Figure 1. Block diagram

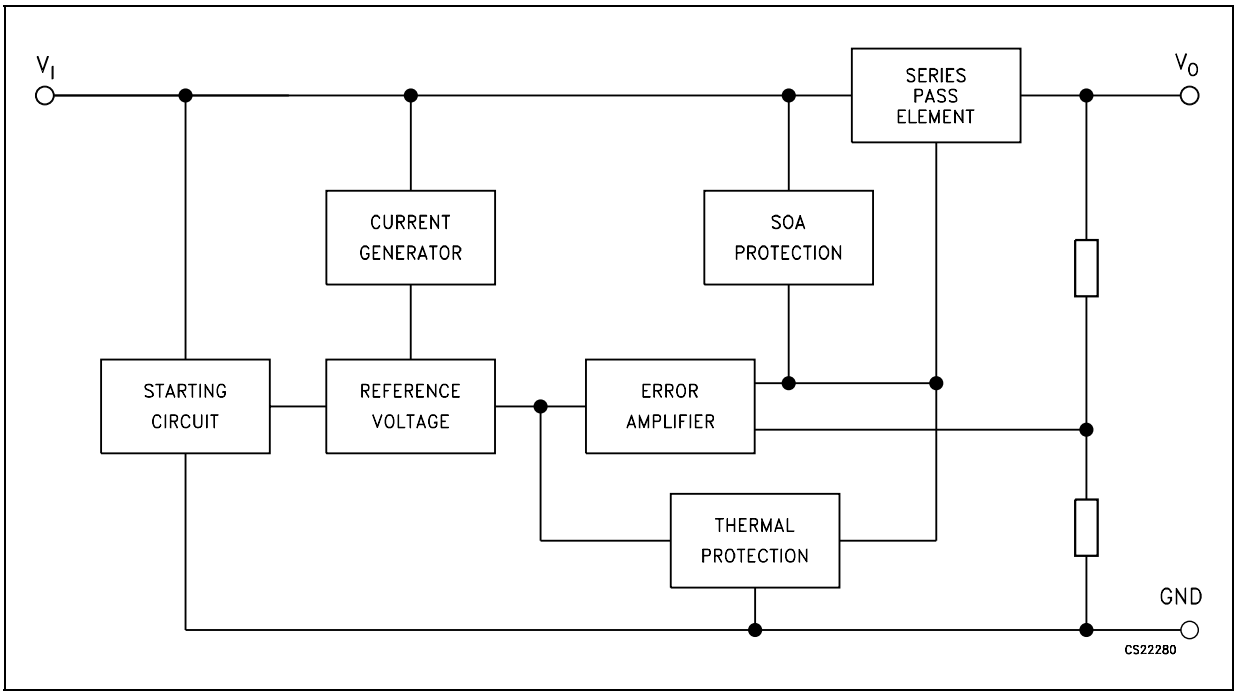

2 Pin configuration

Figure 2. Pin connections (top view)

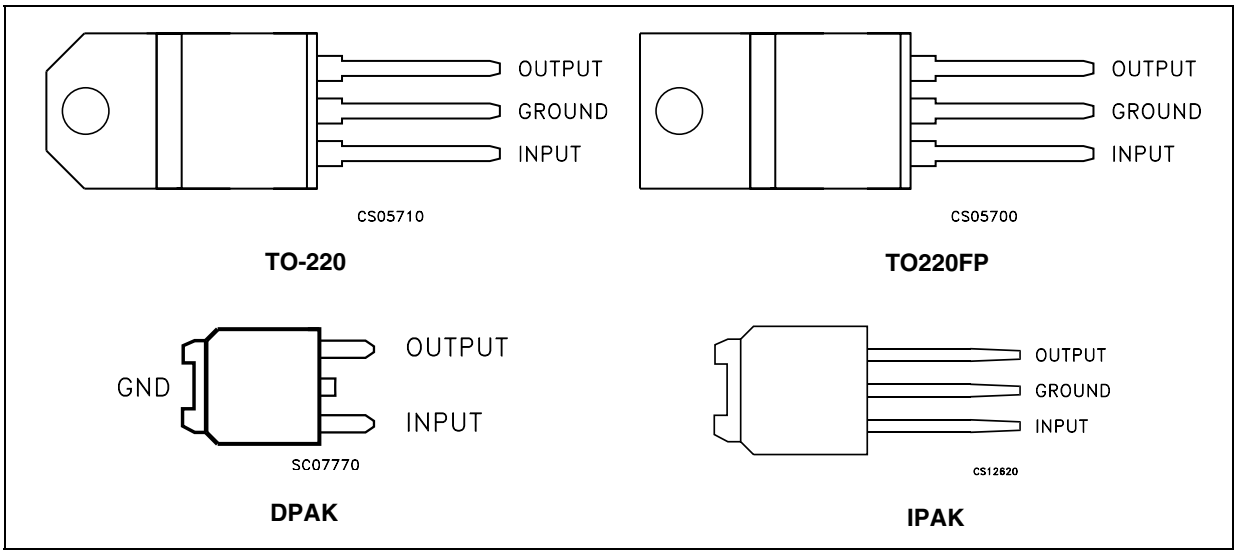

Figure 3. Schematic diagram

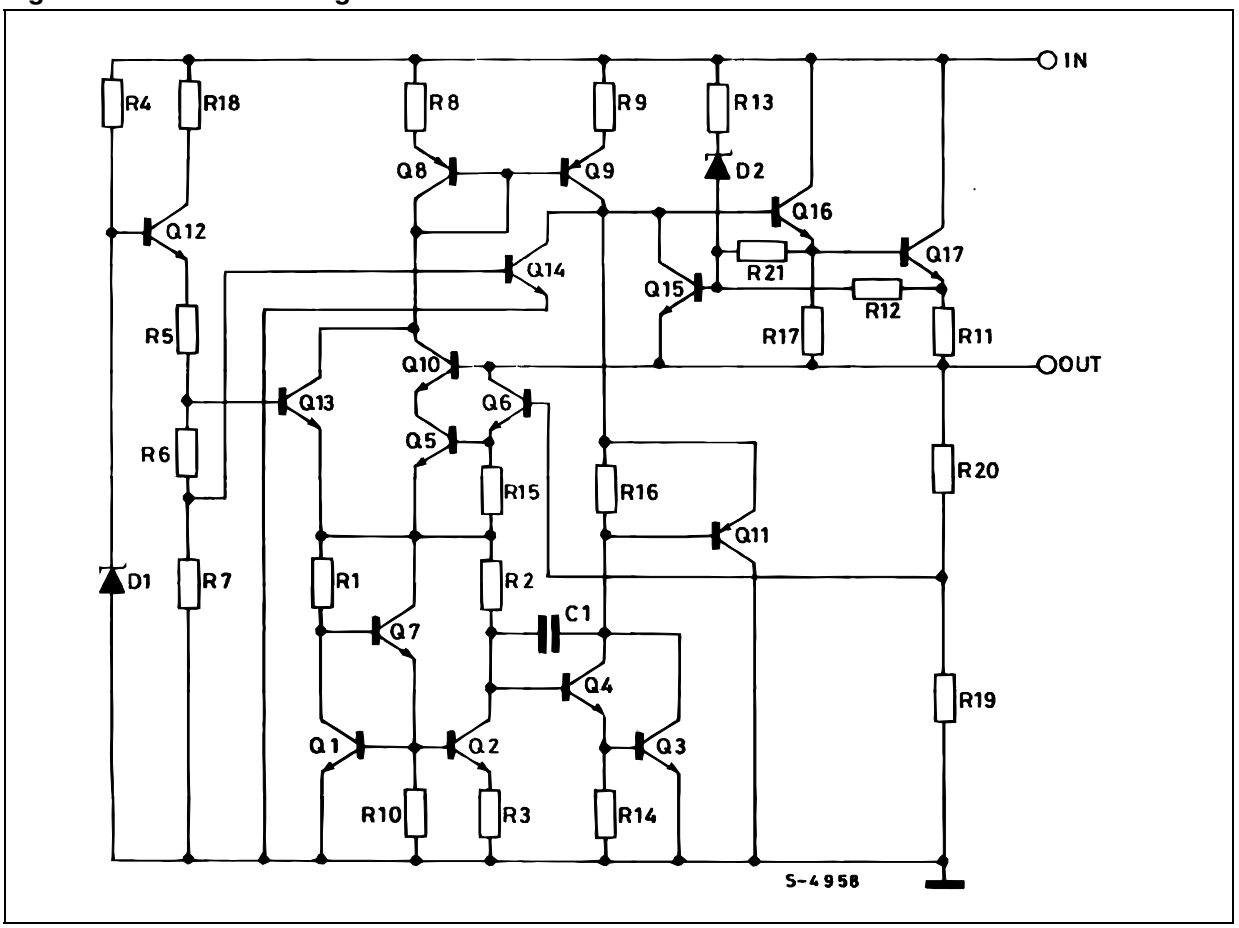

3 Maximum ratings

Table 2. Absolute maximum ratings

Symbol	Parameter		Value	Unit
V_I	DC input voltage	for V_O= 5 to 18V	35	V
		for V_O= 20, 24V	40	
I_O	Output current		Internally limited	mA
P_D	Power dissipation		Internally limited	mW
T_{STG}	Storage temperature range		-65 to 150	°C
T_{OP}	Operating junction temperature range		0 to 150	°C

Note: Absolute maximum ratings are those values beyond which damage to the device may occur. Functional operation under these condition is not implied

Table 3. Thermal data

Symbol	Parameter	TO-220	TO-220FP	DPAK	IPAK	Unit
R_{thJC}	Thermal resistance junction-case	3	5	8		°C/W
R_{thJA}	Thermal resistance junction-ambient	50	60	100		°C/W

Figure 4. Application circuits

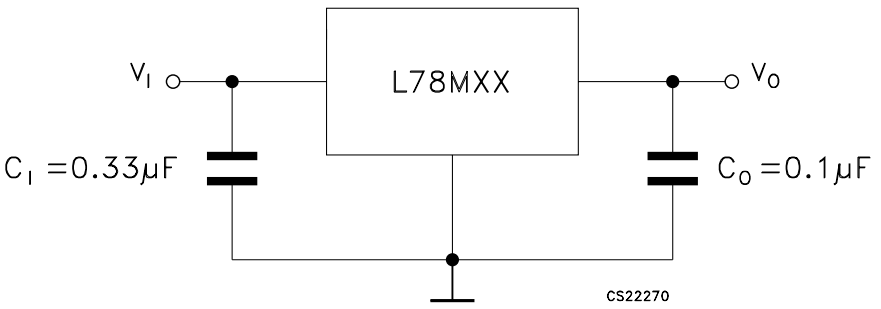

4 Test circuits

Figure 5. DC parameter

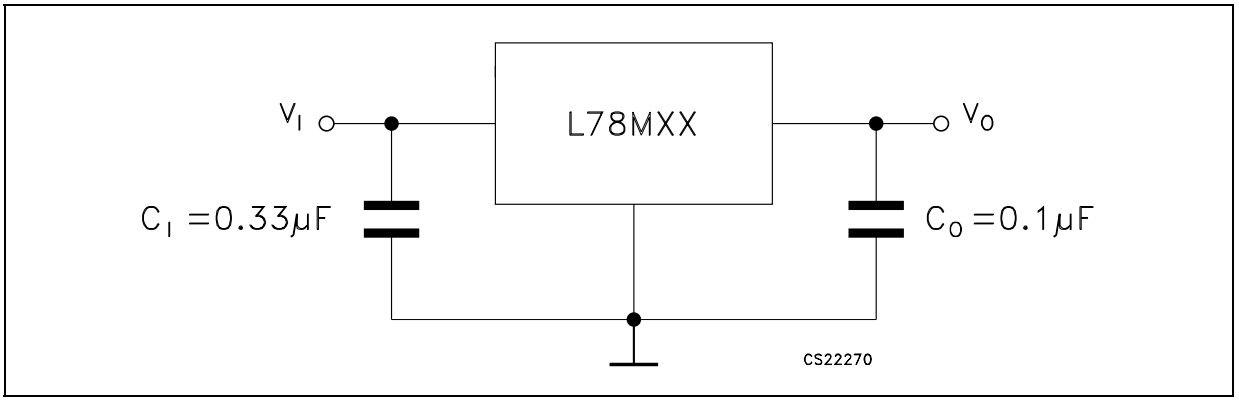

Figure 6. Load regulation

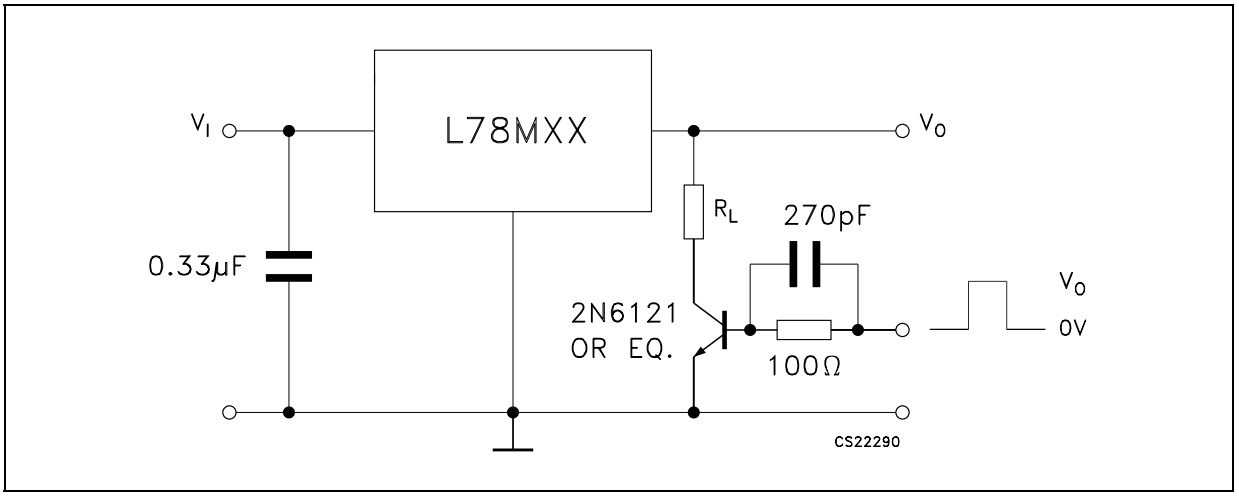

Figure 7. Ripple rejection

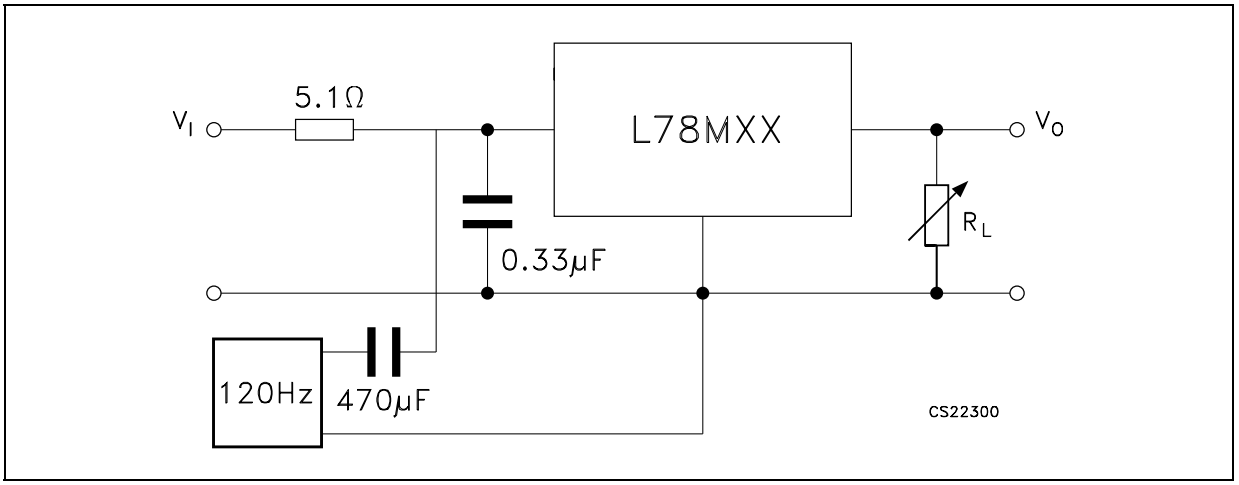

5 Electrical characteristics

Table 4. Electrical characteristics of L78M05C (refer to the test circuits, T_J = 25 °C, V_I = 10 V, I_O = 350 mA, C_I = 0.33 µF, C_O = 0.1 µF unless otherwise specified)

Symbol	Parameter	Test conditions	Min.	Typ.	Max.	Unit
V_O	Output voltage		4.8	5	5.2	V
V_O	Output voltage	I_O = 5 to 350 mA, V_I = 7 to 20 V	4.75	5	5.25	V
ΔV_O	Line regulation	V_I = 7 to 25 V, I_O = 200 mA			100	mV
		V_I = 8 to 25 V, I_O = 200 mA			50	
ΔV_O	Load regulation	I_O = 5 to 500 mA, T_J = 25°C			100	mV
		I_O = 5 to 200 mA, T_J = 25°C			50	
I_d	Quiescent current				6	mA
ΔI_d	Quiescent current change	I_O = 5 to 350 mA			0.5	mA
		I_O = 200 mA, V_I = 8 to 25 V			0.8	
$\Delta V_O/\Delta T$	Output voltage drift	I_O = 5 mA, T_J = 0 to 125°C		-0.5		mV/°C
SVR	Supply voltage rejection	V_I = 8 to 18 V, f = 120Hz, I_O = 300mA	62			dB
eN	Output noise voltage	B =10Hz to 100kHz		40		µV
V_d	Dropout voltage			2		V
I_{sc}	Short circuit current	V_I = 35 V		300		mA

Table 5. Electrical characteristics of L78M06C (refer to the test circuits, T_J = 25 °C, V_I = 11 V, I_O = 350 mA, C_I = 0.33 µF, C_O = 0.1 µF unless otherwise specified)

Symbol	Parameter	Test conditions	Min.	Typ.	Max.	Unit
V_O	Output voltage		5.75	6	6.25	V
V_O	Output voltage	I_O = 5 to 350 mA, V_I = 8 to 21 V	5.7	6	6.3	V
ΔV_O	Line regulation	V_I = 8 to 25 V, I_O = 200 mA			100	mV
		V_I = 9 to 25 V, I_O = 200 mA			50	
ΔV_O	Load regulation	I_O = 5 to 500 mA, T_J = 25°C			120	mV
		I_O = 5 to 200 mA, T_J = 25°C			60	
I_d	Quiescent current				6	mA
ΔI_d	Quiescent current change	I_O = 5 to 350 mA			0.5	mA
		I_O = 200 mA, V_I = 9 to 25 V			0.8	
$\Delta V_O/\Delta T$	Output voltage drift	I_O = 5 mA, T_J = 0 to 125°C		-0.5		mV/°C
SVR	Supply voltage rejection	V_I = 9 to 19 V, f = 120Hz, I_O = 300mA	59			dB
eN	Output noise voltage	B =10Hz to 100kHz		45		µV
V_d	Dropout voltage			2		V
I_{sc}	Short circuit current	V_I = 35 V		270		mA

Table 6. **Electrical characteristics of L78M08C** (refer to the test circuits, T_J = 25 °C, V_I = 14 V, I_O = 350 mA, C_I = 0.33 µF, C_O = 0.1 µF unless otherwise specified)

Symbol	Parameter	Test conditions	Min.	Typ.	Max.	Unit
V_O	Output voltage		7.7	8	8.3	V
V_O	Output voltage	I_O = 5 to 350 mA, V_I = 10.5 to 23 V	7.6	8	8.4	V
ΔV_O	Line regulation	V_I = 10.5 to 25 V, I_O = 200 mA			100	mV
		V_I = 11 to 25 V, I_O = 200 mA			50	
ΔV_O	Load regulation	I_O = 5 to 500 mA, T_J = 25°C			160	mV
		I_O = 5 to 200 mA, T_J = 25°C			80	
I_d	Quiescent current				6	mA
ΔI_d	Quiescent current change	I_O = 5 to 350 mA			0.5	mA
		I_O = 200 mA, V_I = 10.5 to 25 V			0.8	
$\Delta V_O/\Delta T$	Output voltage drift	I_O = 5 mA, T_J = 0 to 125°C		-0.5		mV/°C
SVR	Supply voltage rejection	V_I = 11.5 to 21.5 V, f = 120Hz, I_O = 300mA	56			dB
eN	Output noise voltage	B =10Hz to 100kHz		52		µV
V_d	Dropout voltage			2		V
I_{sc}	Short circuit current	V_I = 35 V		250		mA

Table 7. **Electrical characteristics of L78M09C** (refer to the test circuits, T_J = 25 °C, V_I = 15 V, I_O = 350 mA, C_I = 0.33 µF, C_O = 0.1 µF unless otherwise specified)

Symbol	Parameter	Test conditions	Min.	Typ.	Max.	Unit
V_O	Output voltage		8.65	9	9.35	V
V_O	Output voltage	I_O = 5 to 350 mA, V_I = 11.5 to 24 V	8.55	9	9.45	V
ΔV_O	Line regulation	V_I = 11.5 to 25 V, I_O = 200 mA			100	mV
		V_I = 12 to 25 V, I_O = 200 mA			50	
ΔV_O	Load regulation	I_O = 5 to 500 mA, T_J = 25°C			180	mV
		I_O = 5 to 200 mA, T_J = 25°C			90	
I_d	Quiescent current				6	mA
ΔI_d	Quiescent current change	I_O = 5 to 350 mA			0.5	mA
		I_O = 200 mA, V_I = 11.5 to 25 V			0.8	
$\Delta V_O/\Delta T$	Output voltage drift	I_O = 5 mA, T_J = 0 to 125°C		-0.5		mV/°C
SVR	Supply voltage rejection	V_I = 12.5 to 23 V, f = 120Hz, I_O = 300mA	56			dB
eN	Output noise voltage	B =10Hz to 100kHz		58		µV
V_d	Dropout voltage			2		V
I_{sc}	Short circuit current	V_I = 35 V		250		mA

Table 8. Electrical characteristics of L78M12C (refer to the test circuits, T_J = 25 °C, V_I = 19 V, I_O = 350 mA, C_I = 0.33 µF, C_O = 0.1 µF unless otherwise specified)

Symbol	Parameter	Test conditions	Min.	Typ.	Max.	Unit
V_O	Output voltage		11.5	12	12.5	V
V_O	Output voltage	I_O = 5 to 350 mA, V_I = 14.5 to 27 V	11.4	12	12.6	V
ΔV_O	Line regulation	V_I = 14.5 to 30 V, I_O = 200 mA			100	mV
		V_I = 16 to 30 V, I_O = 200 mA			50	
ΔV_O	Load regulation	I_O = 5 to 500 mA, T_J = 25°C			240	mV
		I_O = 5 to 200 mA, T_J = 25°C			120	
I_d	Quiescent current				6	mA
ΔI_d	Quiescent current change	I_O = 5 to 350 mA			0.5	mA
		I_O = 200 mA, V_I = 14.5 to 30 V			0.8	
$\Delta V_O/\Delta T$	Output voltage drift	I_O = 5 mA, T_J = 0 to 125°C		-1		mV/°C
SVR	Supply voltage rejection	V_I = 15 to 25 V, f = 120Hz, I_O = 300mA	55			dB
eN	Output noise voltage	B =10Hz to 100kHz		75		µV
V_d	Dropout voltage			2		V
I_{sc}	Short circuit current	V_I = 35 V		240		mA

Table 9. Electrical characteristics of L78M15C (refer to the test circuits, T_J = 25 °C, V_I = 23 V, I_O = 350 mA, C_I = 0.33 µF, C_O = 0.1 µF unless otherwise specified)

Symbol	Parameter	Test conditions	Min.	Typ.	Max.	Unit
V_O	Output voltage		14.4	15	15.6	V
V_O	Output voltage	I_O = 5 to 350 mA, V_I = 17.5 to 30 V	14.25	15	15.75	V
ΔV_O	Line regulation	V_I = 17.5 to 30 V, I_O = 200 mA			100	mV
		V_I = 20 to 30 V, I_O = 200 mA			50	
ΔV_O	Load regulation	I_O = 5 to 500 mA, T_J = 25°C			300	mV
		I_O = 5 to 200 mA, T_J = 25°C			150	
I_d	Quiescent current				6	mA
ΔI_d	Quiescent current change	I_O = 5 to 350 mA			0.5	mA
		I_O = 200 mA, V_I = 17.5 to 30 V			0.8	
$\Delta V_O/\Delta T$	Output voltage drift	I_O = 5 mA, T_J = 0 to 125°C		-1		mV/°C
SVR	Supply voltage rejection	V_I = 18.5 to 28.5 V, f = 120Hz, I_O = 300mA	54			dB
eN	Output noise voltage	B =10Hz to 100kHz		90		µV
V_d	Dropout voltage			2		V
I_{sc}	Short circuit current	V_I = 35 V		240		mA

Table 10. Electrical characteristics of L78M18C (refer to the test circuits, T_J = 25 °C, V_I = 26 V, I_O = 350 mA, C_I = 0.33 µF, C_O = 0.1 µF unless otherwise specified)

Symbol	Parameter	Test conditions	Min.	Typ.	Max.	Unit
V_O	Output voltage		17.3	18	18.7	V
V_O	Output voltage	I_O = 5 to 350 mA, V_I = 20.5 to 33 V	17.1	18	18.9	V
ΔV_O	Line regulation	V_I = 21 to 33 V, I_O = 200 mA			100	mV
		V_I = 24 to 33 V, I_O = 200 mA			50	
ΔV_O	Load regulation	I_O = 5 to 500 mA, T_J = 25°C			360	mV
		I_O = 5 to 200 mA, T_J = 25°C			180	
I_d	Quiescent current				6	mA
ΔI_d	Quiescent current change	I_O = 5 to 350 mA			0.5	mA
		I_O = 200 mA, V_I = 21 to 33 V			0.8	
$\Delta V_O/\Delta T$	Output voltage drift	I_O = 5 mA, T_J = 0 to 125°C		-1.1		mV/°C
SVR	Supply voltage rejection	V_I = 22 to 32 V, f = 120Hz, I_O = 300mA	53			dB
eN	Output noise voltage	B =10Hz to 100kHz		100		µV
V_d	Dropout voltage			2		V
I_{sc}	Short circuit current	V_I = 35 V		240		mA

Table 11. Electrical characteristics of L78M24C (refer to the test circuits, T_J = 25 °C, V_I = 23 V, I_O = 350 mA, C_I = 0.33 µF, C_O = 0.1 µF unless otherwise specified)

Symbol	Parameter	Test conditions	Min.	Typ.	Max.	Unit
V_O	Output voltage		23	24	25	V
V_O	Output voltage	I_O = 5 to 350 mA, V_I = 27 to 38 V	22.8	24	25.2	V
ΔV_O	Line regulation	V_I = 27 to 38 V, I_O = 200 mA			100	mV
		V_I = 28 to 38 V, I_O = 200 mA			50	
ΔV_O	Load regulation	I_O = 5 to 500 mA, T_J = 25°C			480	mV
		I_O = 5 to 200 mA, T_J = 25°C			240	
I_d	Quiescent current				6	mA
ΔI_d	Quiescent current change	I_O = 5 to 350 mA			0.5	mA
		I_O = 200 mA, V_I = 27 to 38 V			0.8	
$\Delta V_O/\Delta T$	Output voltage drift	I_O = 5 mA, T_J = 0 to 125°C		-1.2		mV/°C
SVR	Supply voltage rejection	V_I = 28 to 38 V, f = 120Hz, I_O = 300mA	50			dB
eN	Output noise voltage	B =10Hz to 100kHz		170		µV
V_d	Dropout voltage			2		V
I_{sc}	Short circuit current	V_I = 35 V		240		mA

6 Typical performance

Figure 8. Dropout voltage vs junction temp.

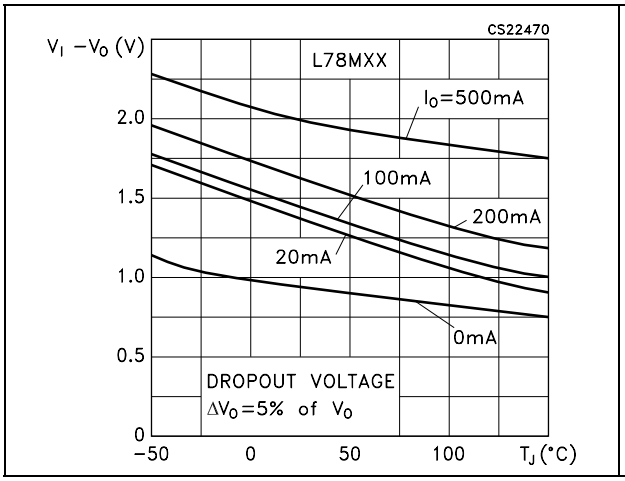

Figure 9. Dropout characteristics

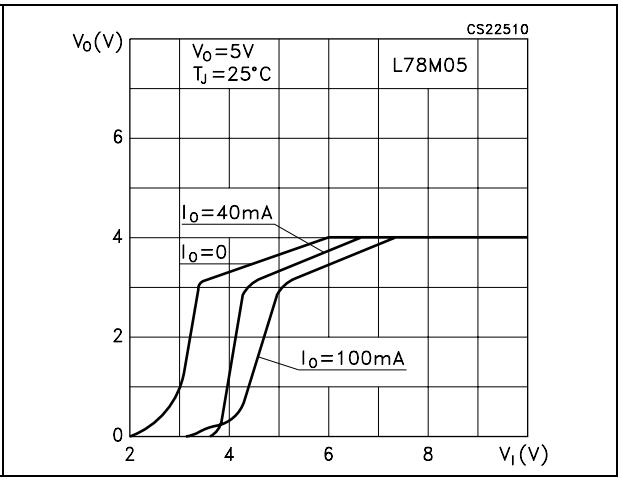

Figure 10. Peak output current vs input-output differential voltage

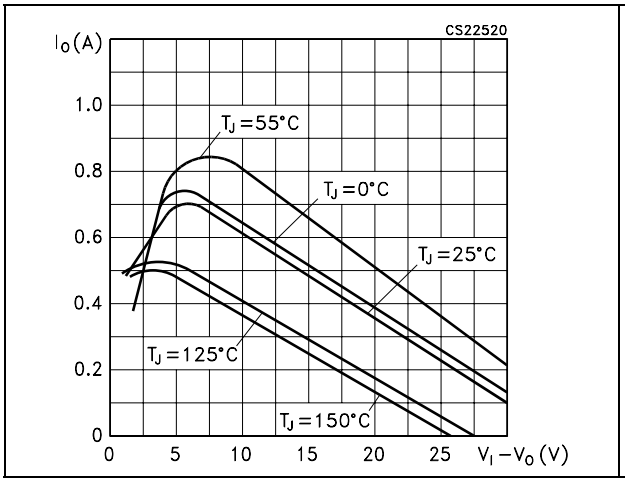

Figure 11. Output voltage vs junction temperature

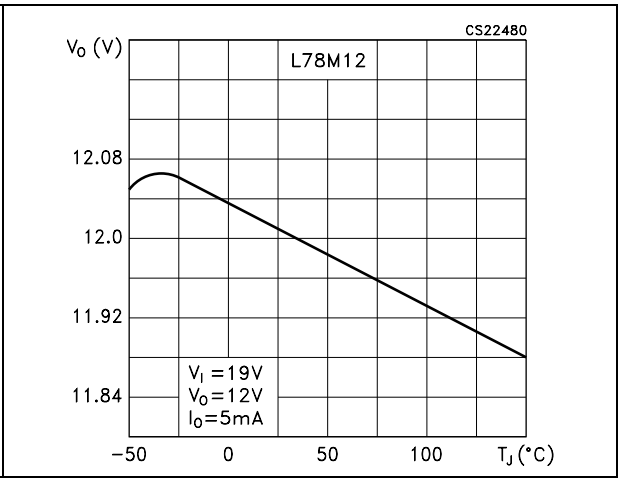

Figure 12. Supply voltage rejection vs freq.

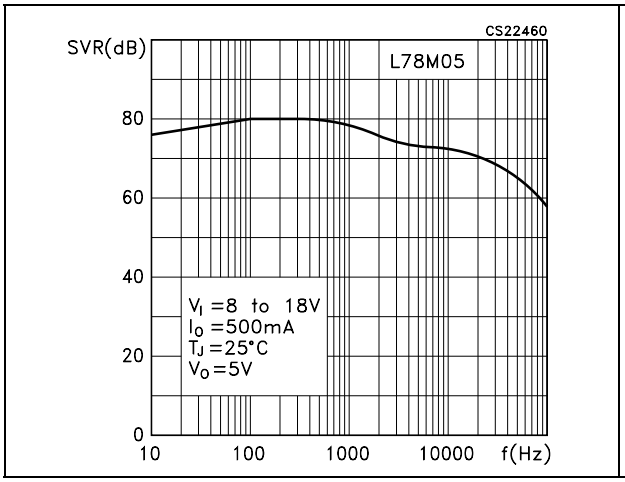

Figure 13. Quiescent current vs junction temp.

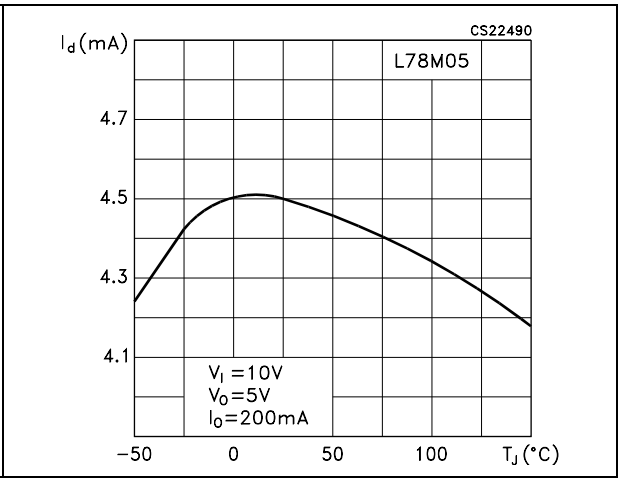

Figure 14. Load transient response

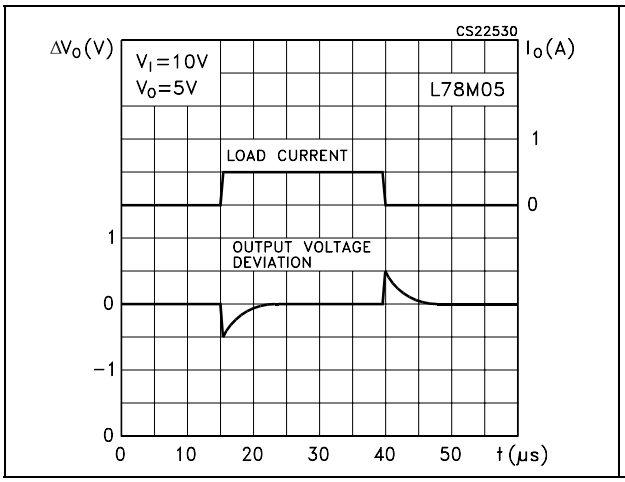

Figure 15. Line transient response

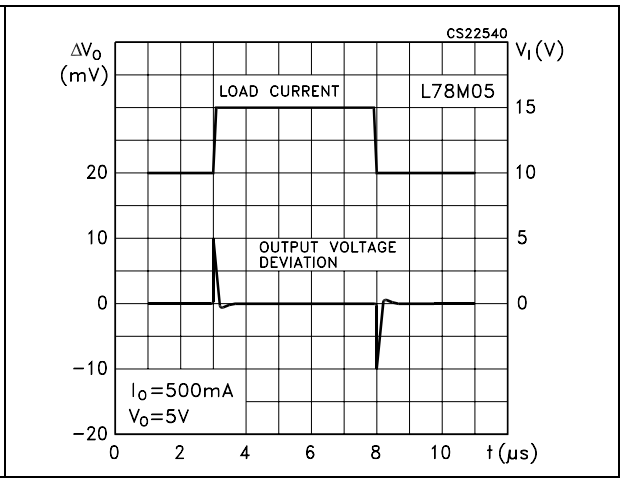

Figure 16. Quiescent current vs input voltage

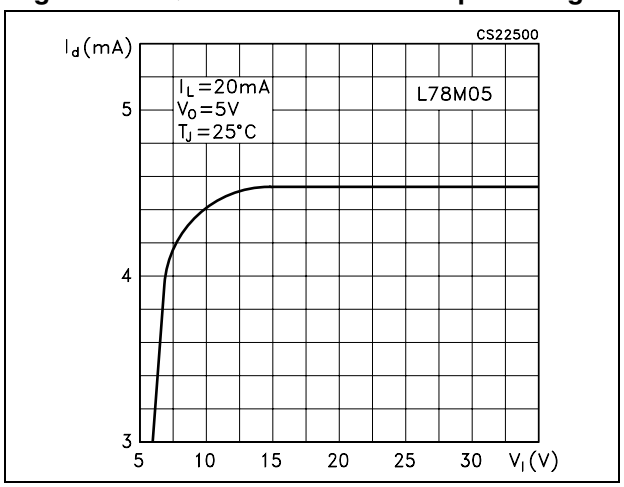

Figure 17. Fixed output regulator

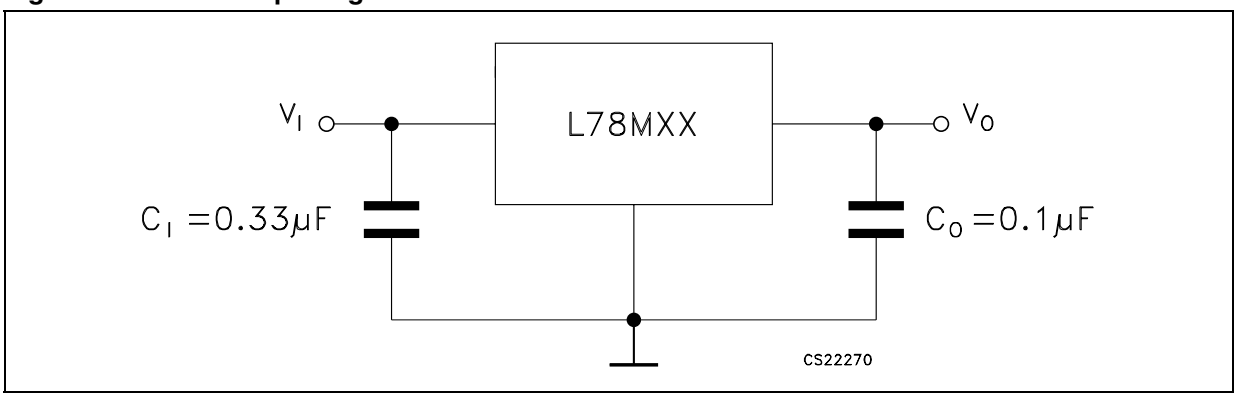

1. To specify an output voltage, substitute voltage value for "XX".
2. Although no output capacitor is need for stability, it does improve transient response.
3. Required if regulator is locate an appreciable distance from power supply filter.

Figure 18. Constant current regulator

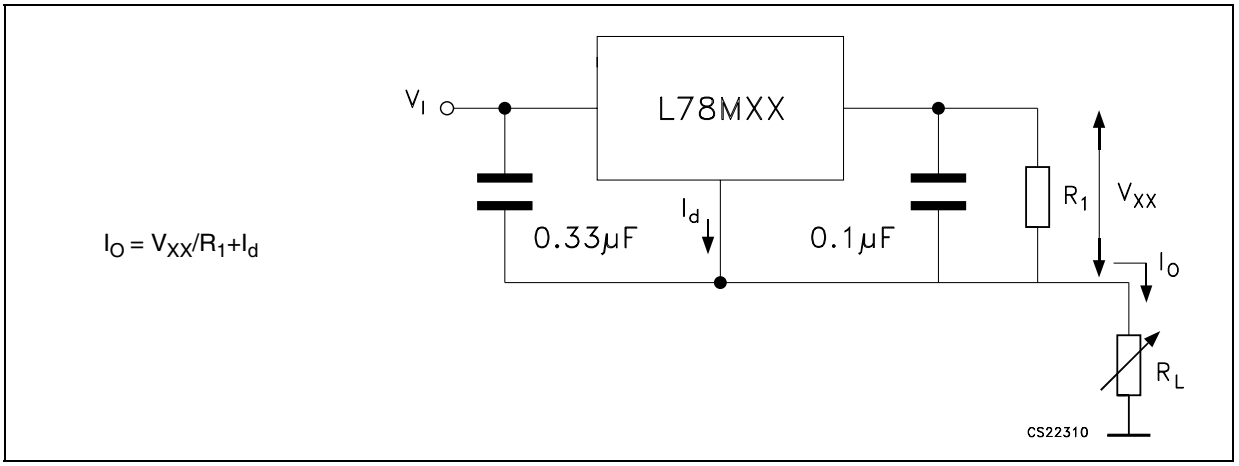

Figure 19. Circuit for increasing output voltage

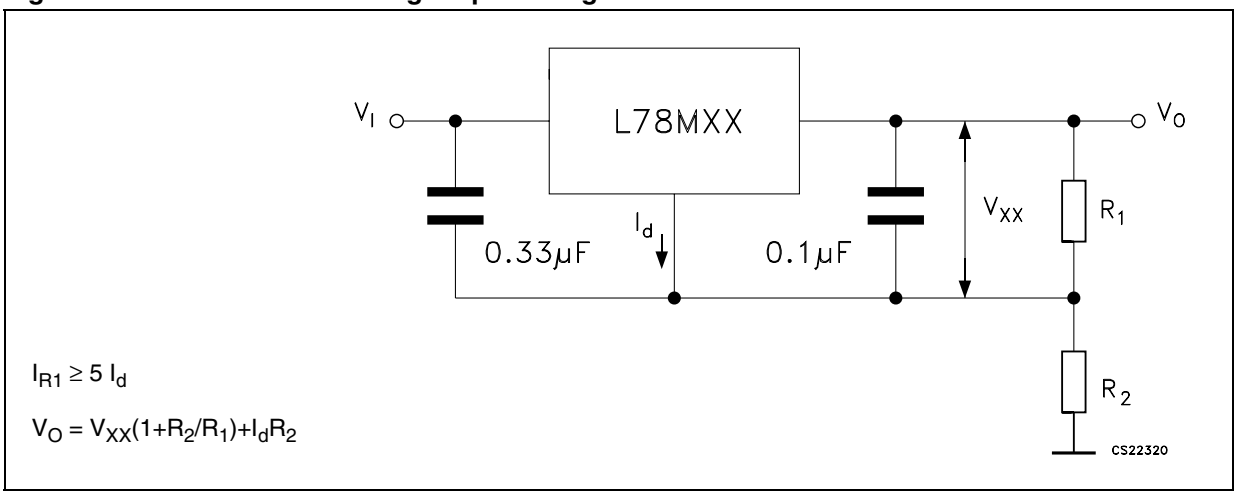

Figure 20. Adjustable output regulator (7 to 30 V)

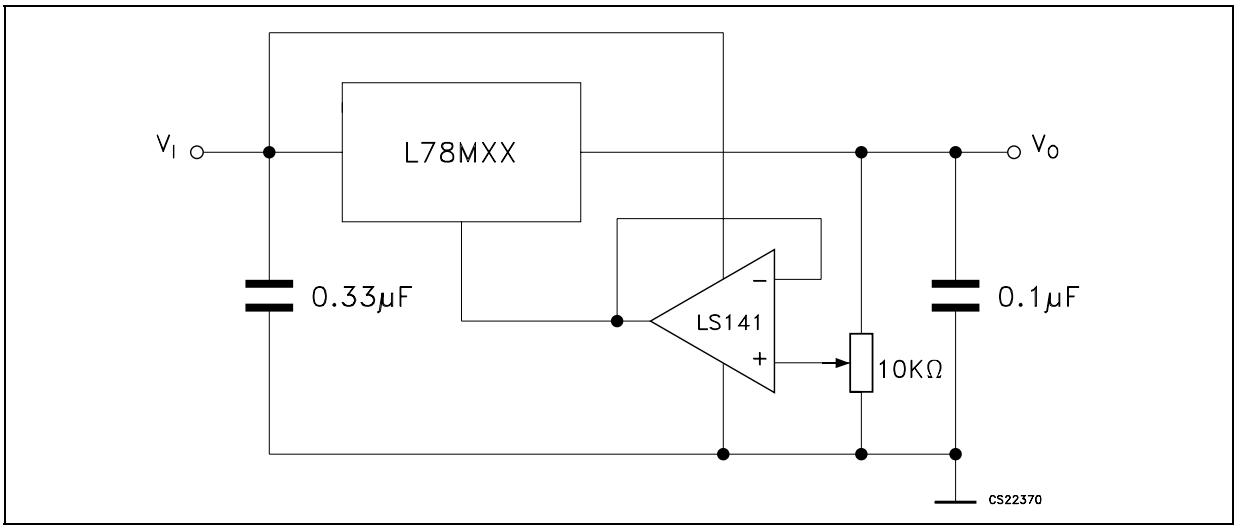

Figure 21. 0.5 to 10 V regulator

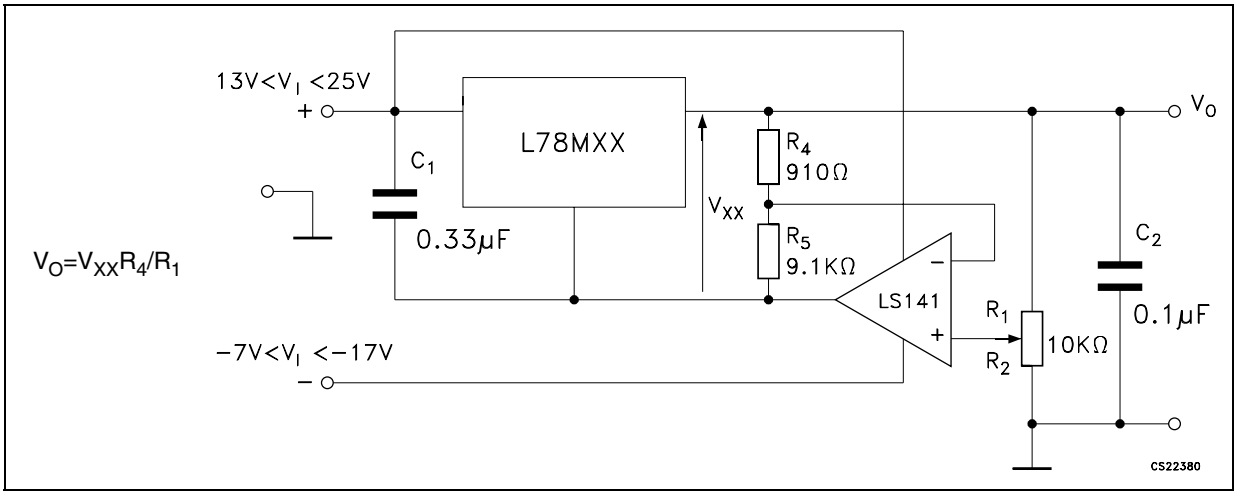

Figure 22. High current voltage regulator

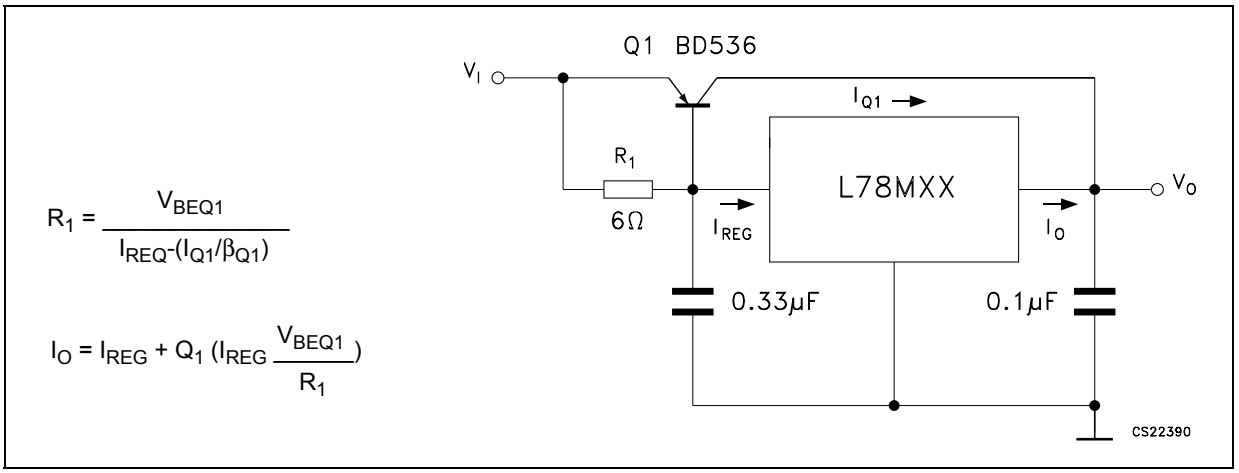

Figure 23. High output current with short circuit protection

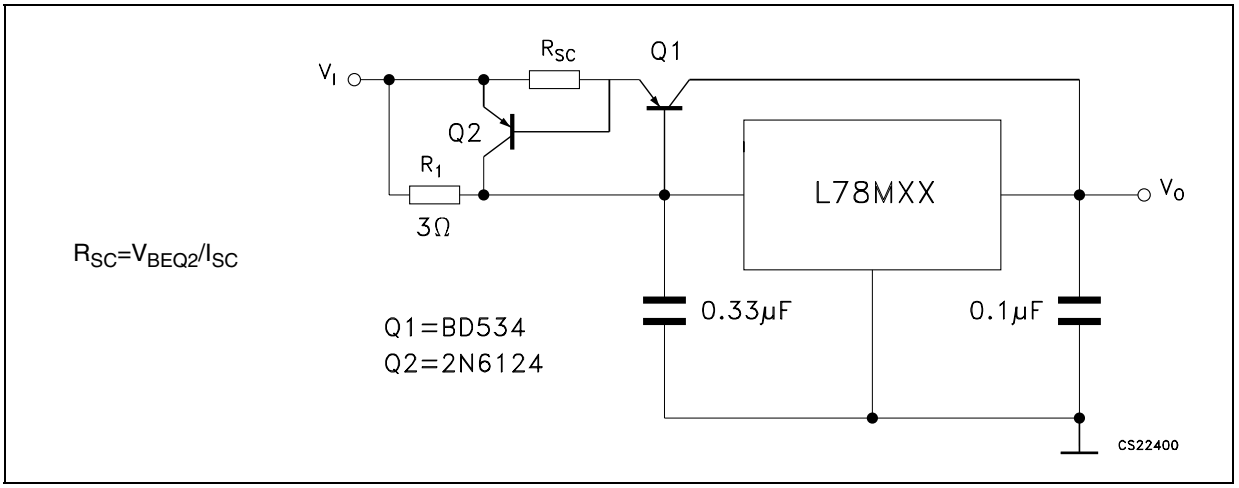

Figure 24. Tracking voltage regulator

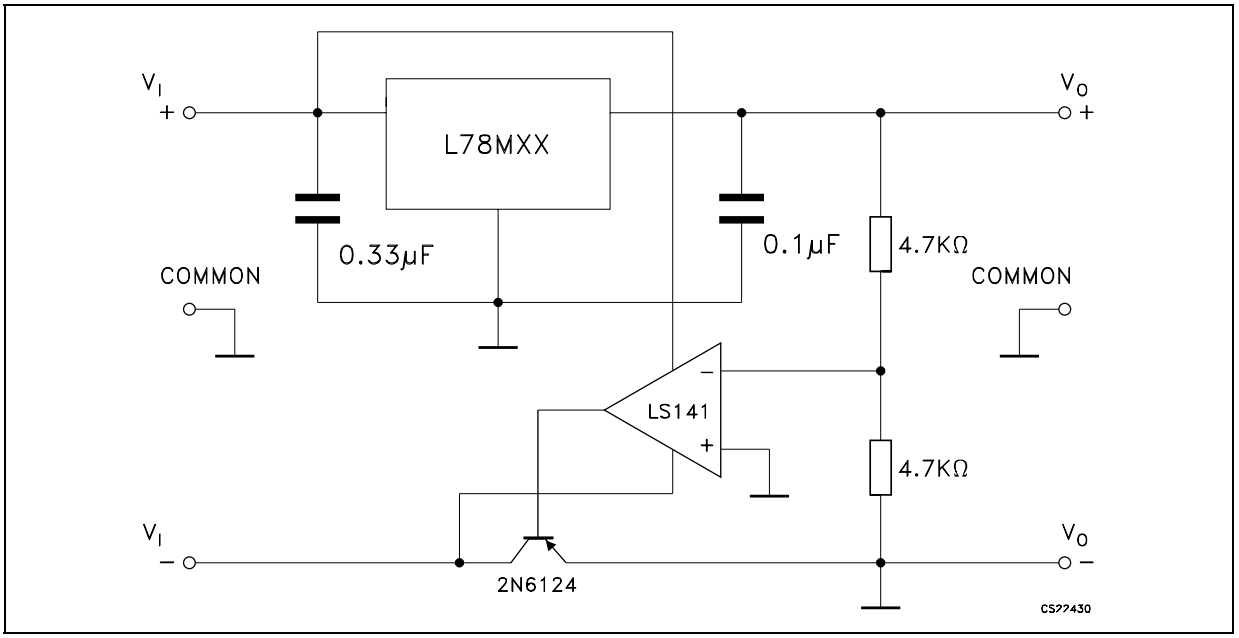

Figure 25. High input voltage circuit

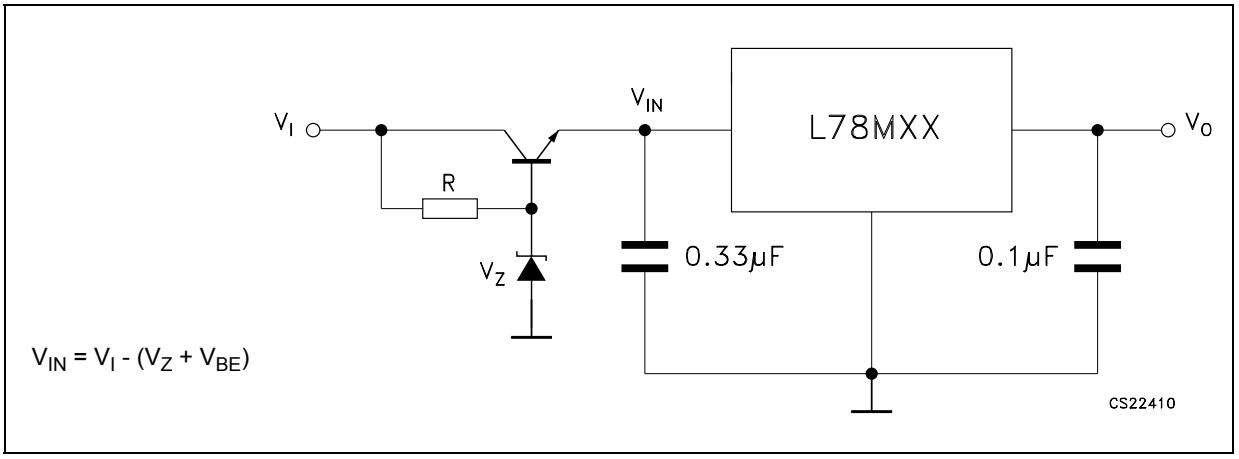

Figure 26. Reducing power dissipation with dropping resistor

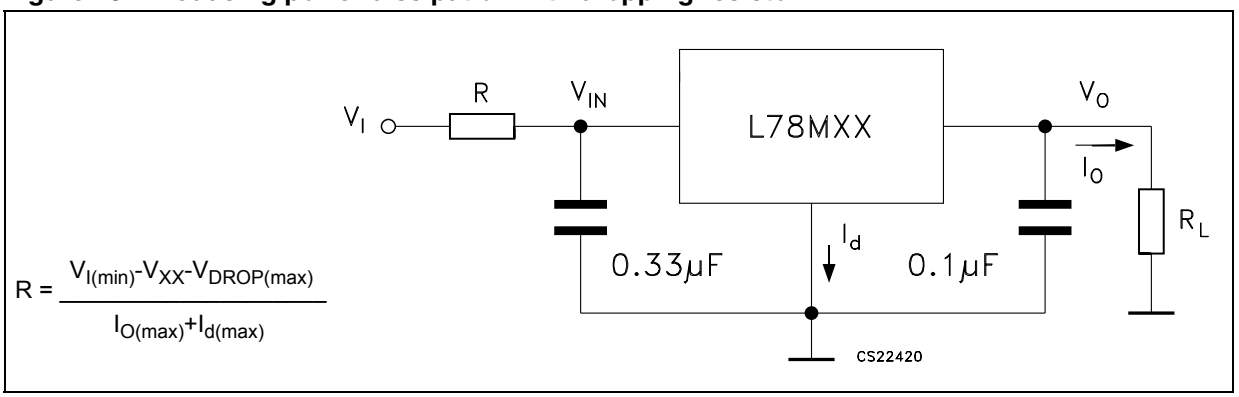

Figure 27. Power AM modulator (unity voltage gain, $I_O \leq 0.5$)

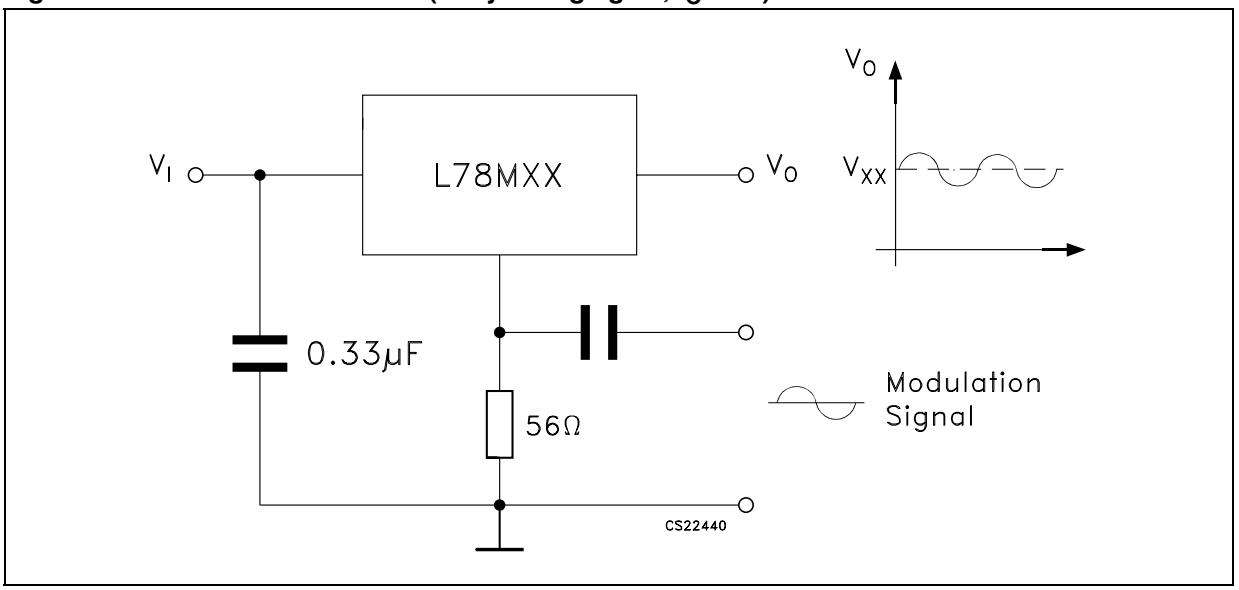

Note: The circuit performs well up to 100 kHz.

Figure 28. Adjustable output voltage with temperature compensation

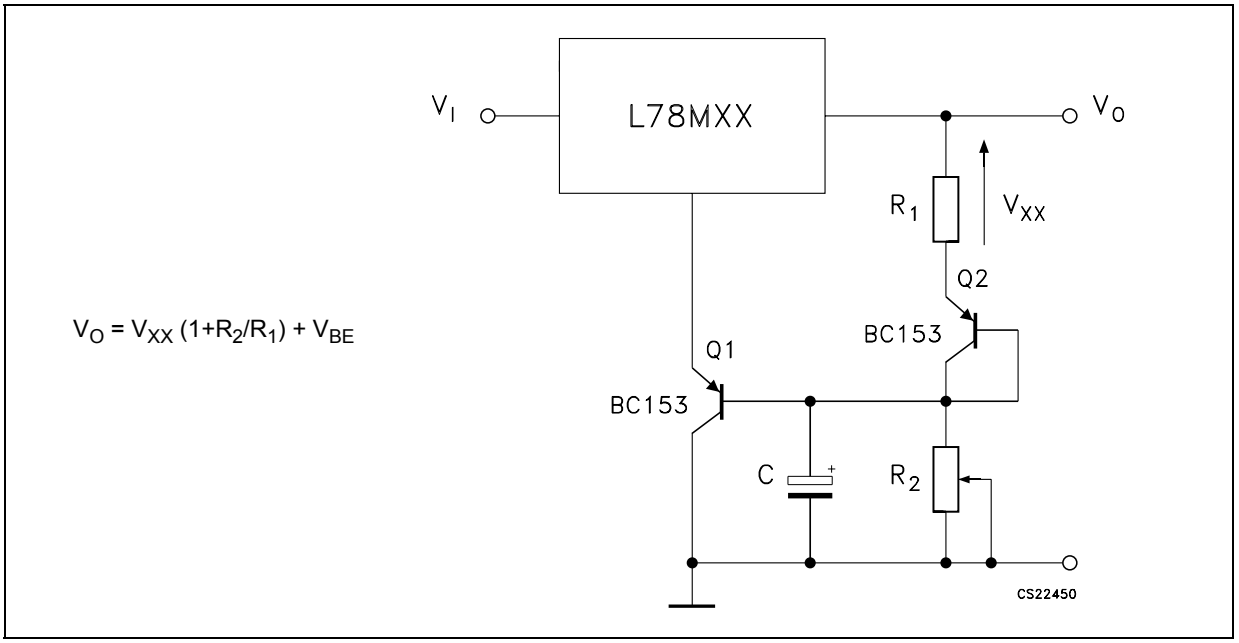

$V_O = V_{XX} (1+R_2/R_1) + V_{BE}$

Note: Q_2 is connected as a diode in order to compensate the variation of the Q_1 V_{BE} with the temperature. C allows a slow rise time of the V_O.

7 Package mechanical data

In order to meet environmental requirements, ST offers these devices in ECOPACK® packages. These packages have a lead-free second level interconnect. The category of second Level Interconnect is marked on the package and on the inner box label, in compliance with JEDEC Standard JESD97. The maximum ratings related to soldering conditions are also marked on the inner box label. ECOPACK is an ST trademark. ECOPACK specifications are available at: www.st.com.

TO-220 mechanical data

Dim.	mm.			inch.		
	Min.	Typ.	Max.	Min.	Typ.	Max.
A	4.40		4.60	0.173		0.181
C	1.23		1.32	0.048		0.051
D	2.40		2.72	0.094		0.107
D1		1.27			0.050	
E	0.49		0.70	0.019		0.027
F	0.61		0.88	0.024		0.034
F1	1.14		1.70	0.044		0.067
F2	1.14		1.70	0.044		0.067
G	4.95		5.15	0.194		0.203
G1	2.4		2.7	0.094		0.106
H2	10.0		10.40	0.393		0.409
L2		16.4			0.645	
L4	13.0		14.0	0.511		0.551
L5	2.65		2.95	0.104		0.116
L6	15.25		15.75	0.600		0.620
L7	6.2		6.6	0.244		0.260
L9	3.5		3.93	0.137		0.154
DIA.	3.75		3.85	0.147		0.151

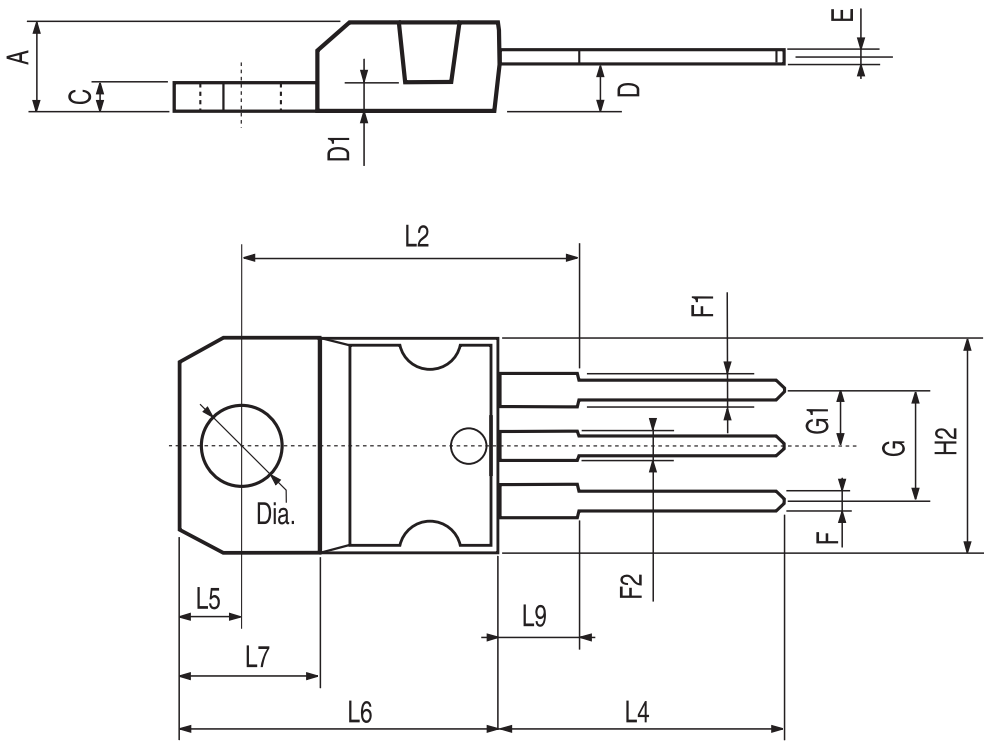

P011C

TO-220FP mechanical data

Dim.	mm.			inch.		
	Min.	Typ	Max.	Min.	Typ.	Max.
A	4.40		4.60	0.173		0.181
B	2.5		2.7	0.098		0.106
D	2.5		2.75	0.098		0.108
E	0.45		0.70	0.017		0.027
F	0.75		1	0.030		0.039
F1	1.15		1.50	0.045		0.059
F2	1.15		1.50	0.045		0.059
G	4.95		5.2	0.194		0.204
G1	2.4		2.7	0.094		0.106
H	10.0		10.40	0.393		0.409
L2		16			0.630	
L3	28.6		30.6	1.126		1.204
L4	9.8		10.6	0.385		0.417
L5	2.9		3.6	0.114		0.142
L6	15.9		16.4	0.626		0.645
L7	9		9.3	0.354		0.366
DIA.	3		3.2	0.118		0.126

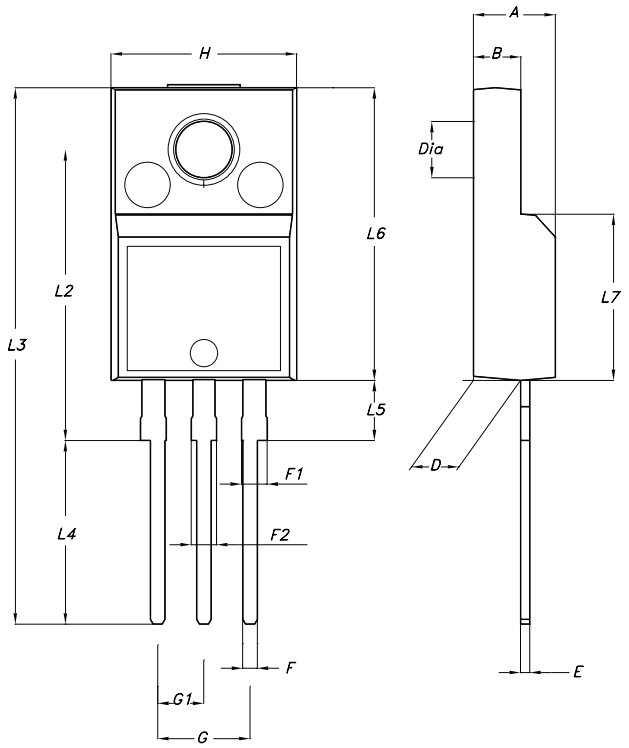

7012510A-H

Figure 29. Drawing dimension DPAK (type STD-ST)

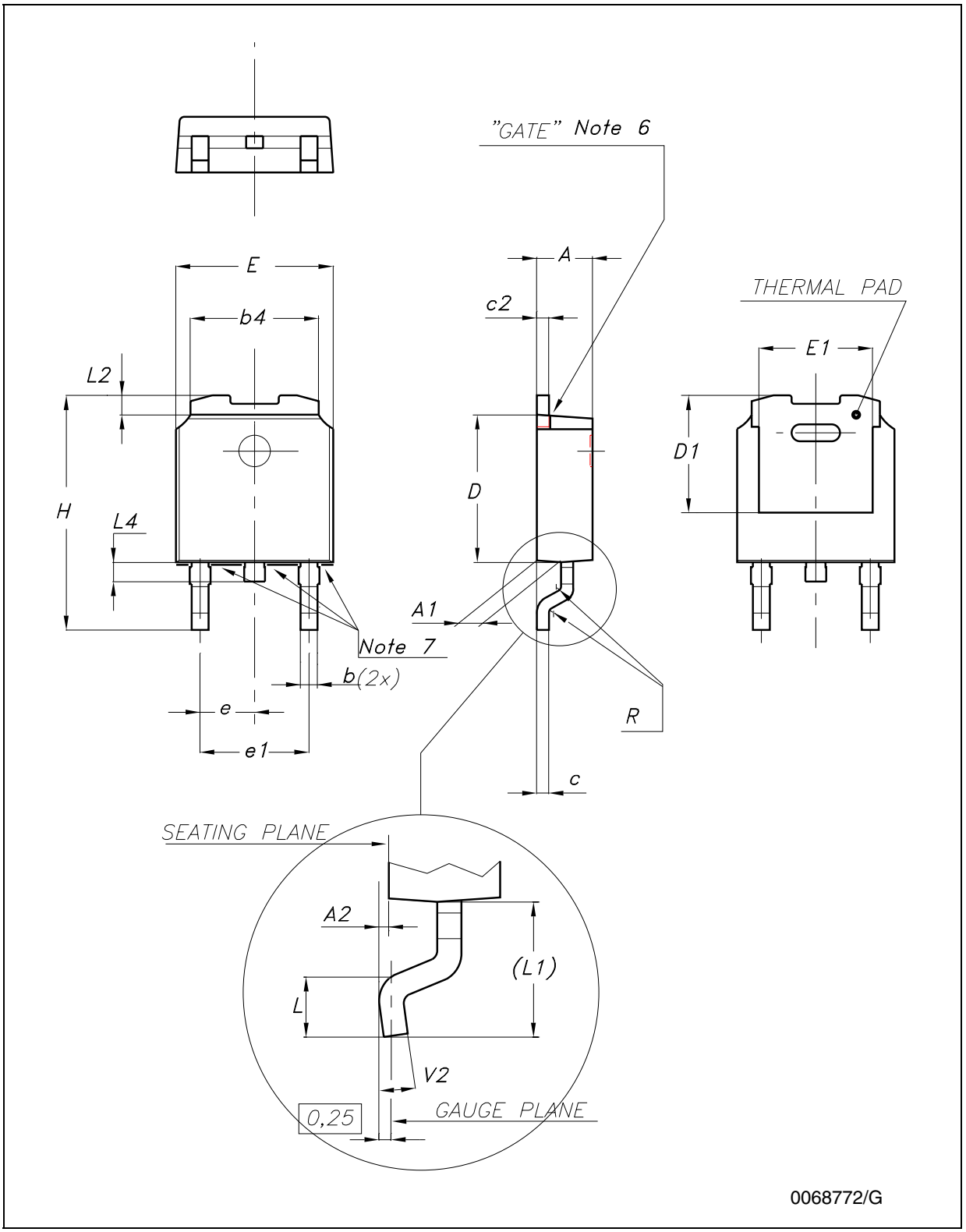

Figure 30. Drawing dimension DPAK (type FUJITSU-subcon.)

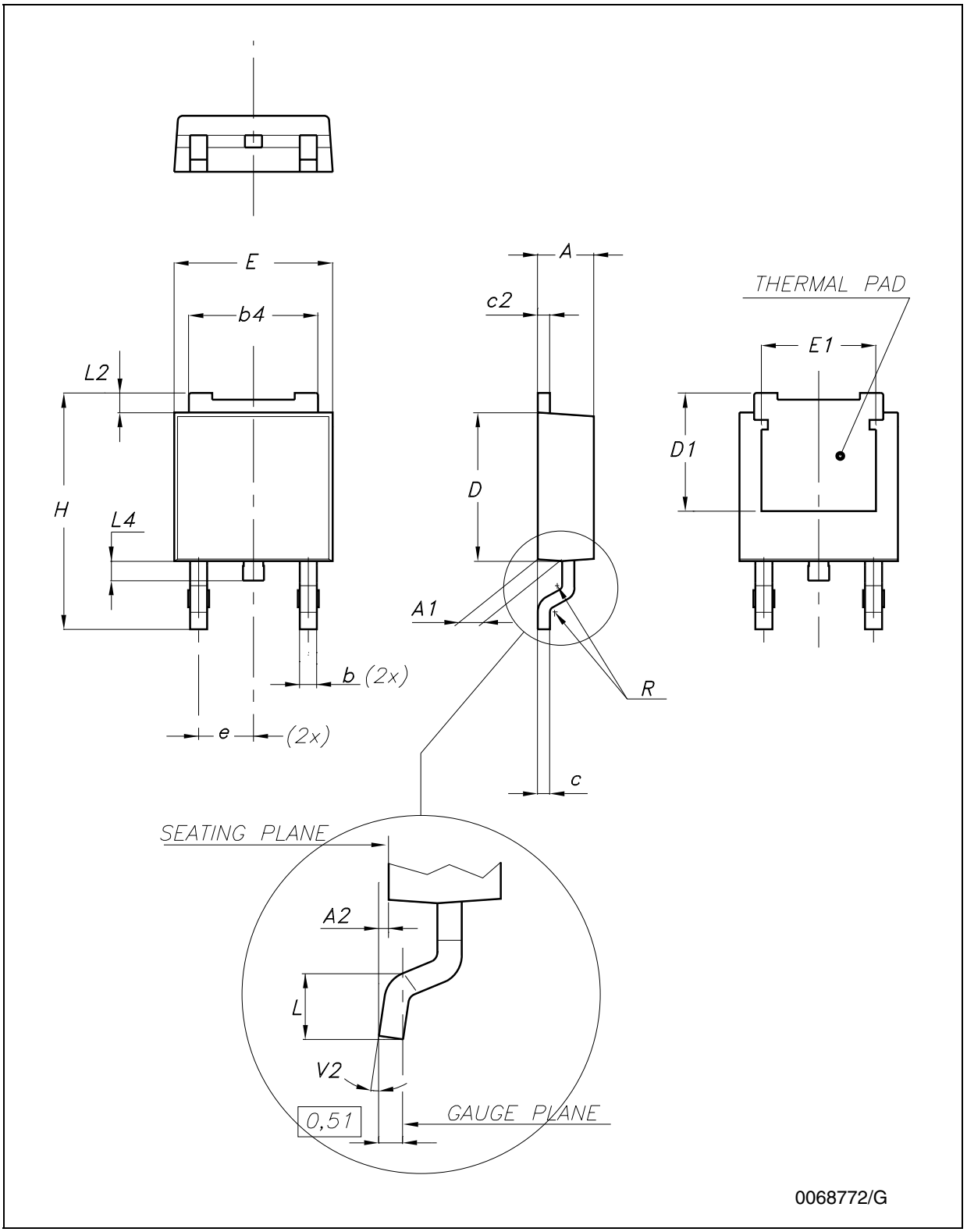

Figure 31. Drawing dimension DPAK (type IDS-subcon.)

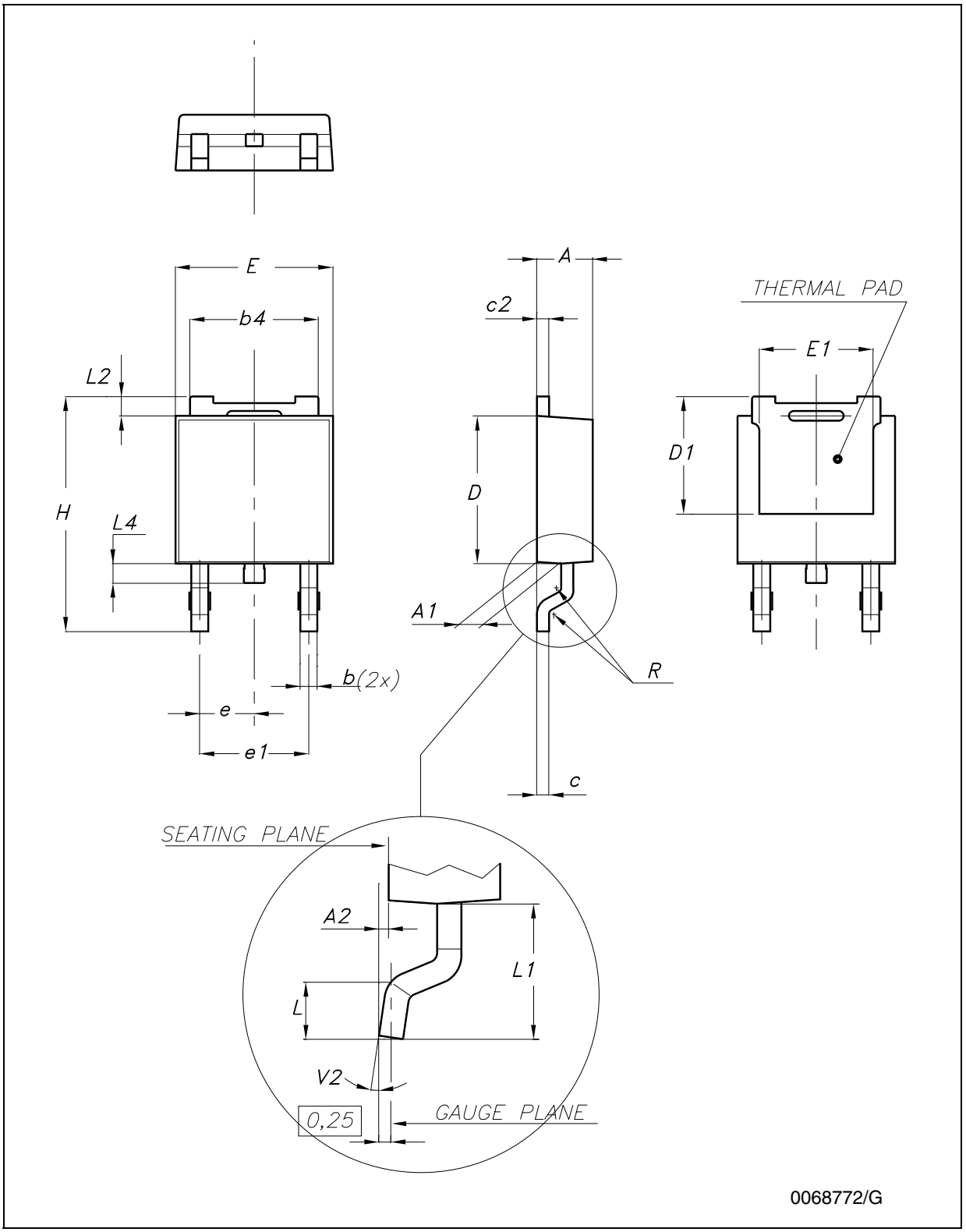

Table 12. DPAK mechanical data

Dim.	Type STD-ST			Type FUJITSU-SUBCON.			Type IDS-SUBCON		
	mm.			mm.			mm.		
	Min.	Typ.	Max.	Min.	Typ.	Max.	Min.	Typ.	Max.
A	2.20		2.40	2.25	2.30	2.35	2.19		2.38
A1	0.90		1.10	0.96		1.06	0.89		1.14
A2	0.03		0.23	0		0.10	0.03		0.23
b	0.64		0.90	0.76		0.86	0.64		0.88
b4	5.20		5.40	5.28		5.38	5.21		5.46
c	0.45		0.60	0.46		0.56	0.46		0.58
c2	0.48		0.60	0.46		0.56	0.46		0.58
D	6.00		6.20	6.05		6.15	5.97		6.22
D1		5.10		5.27		5.47		5.20	
E	6.40		6.60	6.55	6.60	6.65	6.35		6.73
E1		4.70			4.77			4.70	
e		2.28		2.23	2.28	2.33		2.28	
e1	4.40		4.60				4.51		4.61
H	9.35		10.10	9.90		10.30	9.40		10.42
L	1.00			1.40		1.60	0.90		
L1		2.80					2.50		2.65
L2		0.80		1.03		1.13	0.89		1.27
L4	0.60		1.00	0.70		0.90	0.64		1.02
R		0.20			0.40			0.20	
V2	0°		8°	0°		8°	0°		8°

Note: The DPAK package coming from the two subcontractors (Fujitsu and IDS) are fully compatible with the ST's package suggested footprint.

Figure 32. DPAK footprint recommended data

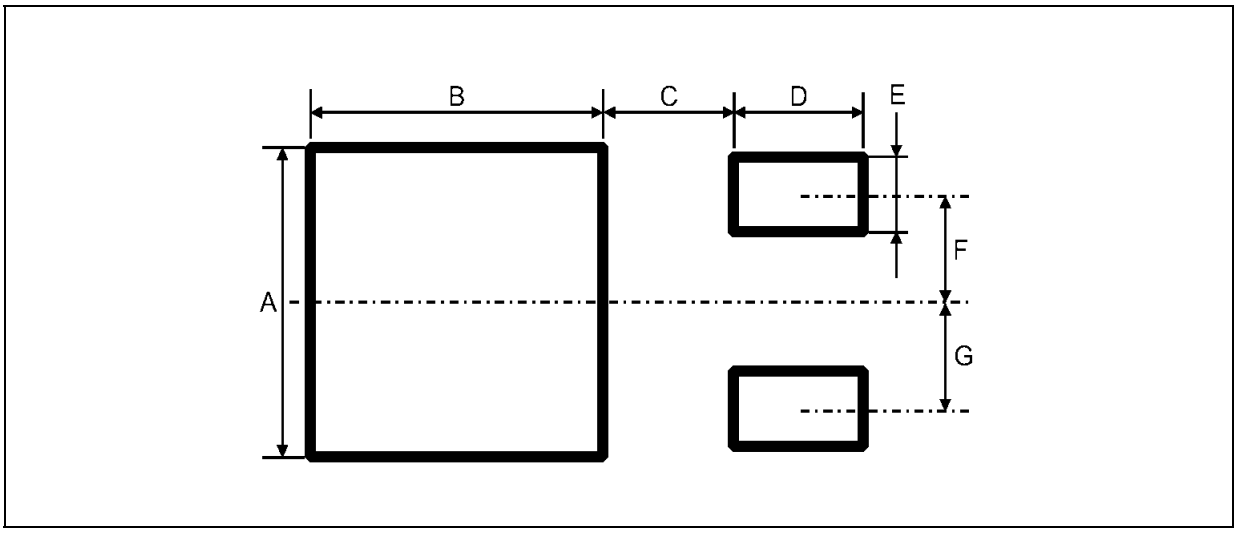

Table 13. Footprint data

Values		
Dim.	**mm.**	**inch.**
A	6.70	0.264
B	6.70	0.64
C	1.8	0.070
D	3.0	0.118
E	1.60	0.063
F	2.30	0.091
G	2.30	0.091

IPAK mechanical data

Dim.	mm.			inch.		
	Min.	Typ.	Max.	Min.	Typ.	Max.
A	2.2		2.4	0.086		0.094
A1	0.9		1.1	0.035		0.043
B	0.64		0.9	0.025		0.035
B2	5.2		5.4	0.204		0.212
B3			0.95			0.037
B5		0.3			0.012	
B6			0.95			0.037
C	0.45		0.6	0.017		0.023
C2	0.48		0.6	0.019		0.023
D	6		6.2	0.236		0.244
E	6.4		6.6	0.252		0.260
G	4.4		4.6	0.173		0.181
H	15.9		16.3	0.626		0.641
L	9		9.4	0.354		0.370
L1	0.8		1.2	0.031		0.047
L2		0.8	1		0.031	0.039

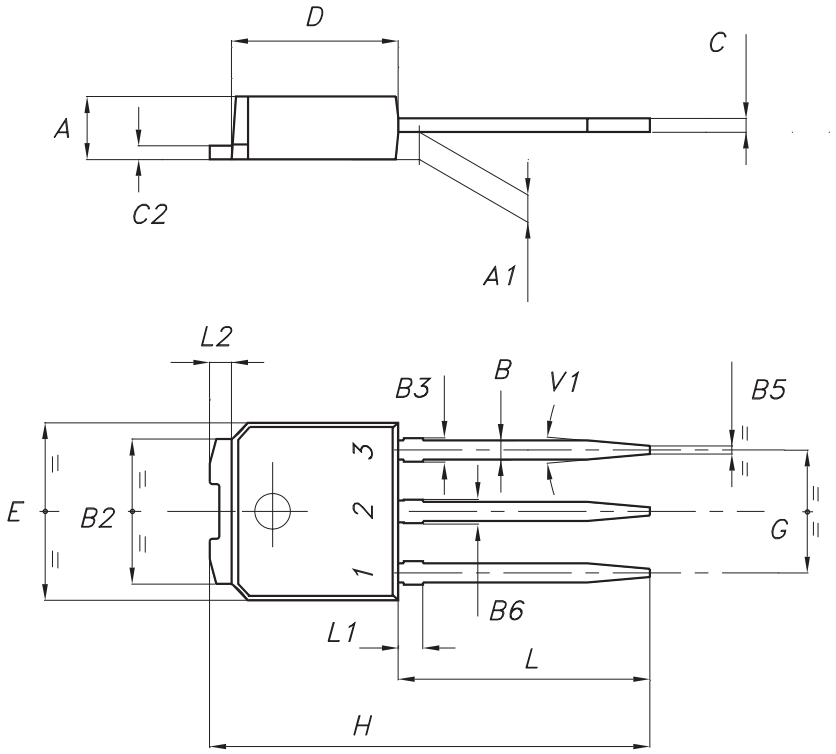

0068771-F

Tape & reel DPAK-PPAK mechanical data

Dim.	mm.			inch.		
	Min.	Typ.	Max.	Min.	Typ.	Max.
A			330			12.992
C	12.8	13.0	13.2	0.504	0.512	0.519
D	20.2			0.795		
N	60			2.362		
T			22.4			0.882
Ao	6.80	6.90	7.00	0.268	0.272	0.2.76
Bo	10.40	10.50	10.60	0.409	0.413	0.417
Ko	2.55	2.65	2.75	0.100	0.104	0.105
Po	3.9	4.0	4.1	0.153	0.157	0.161
P	7.9	8.0	8.1	0.311	0.315	0.319

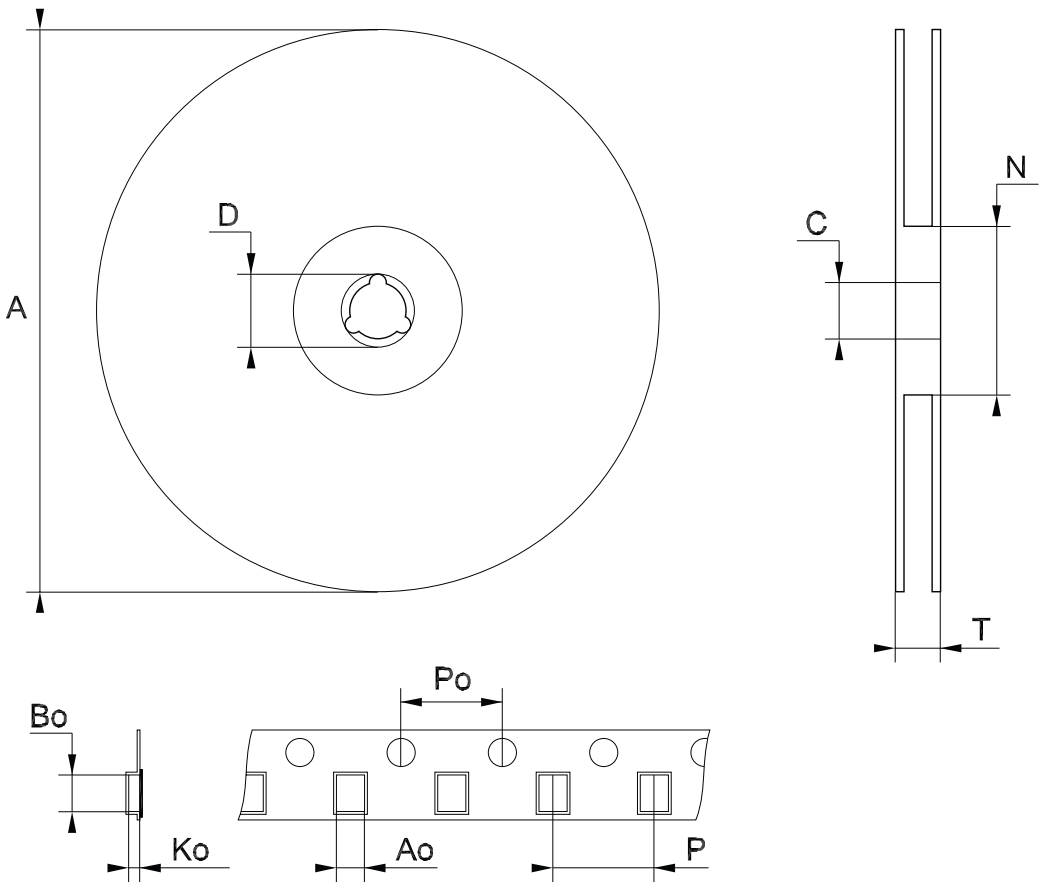

Note: Drawing not in scale

8 Order codes

Table 14. Order codes

Packages				
TO-220	**TO-220FP**	**DPAK**	**IPAK**	**Output voltage**
L78M05CV	L78M05CP	L78M05CDT-TR	L78M05CDT-1	5 V
		L78M06CDT-TR	L78M06CDT-1 (1)	6 V
L78M08CV		L78M08CDT-TR	L78M08CDT-1 (1)	8 V
L78M09CV	L78M09CP	L78M09CDT-TR	L78M09CDT-1 (1)	9 V
L78M12CV		L78M12CDT-TR		12 V
L78M15CV		L78M15CDT-TR		15 V
		L78M18CDT-TR		18 V
L78M24CV	L78M24CP (1)	L78M24CDT-TR	L78M24CDT-1 (1)	24 V

1. Available on request

9 Revision history

Table 15. Document revision history

Date	Revision	Changes
21-Jun-2004	6	Document updating.
30-Aug-2006	7	Order codes has been updated and new template.
29-Nov-2006	8	DPAK mechanical data has been updated and add footprint data.
06-Jun-2007	9	Order codes has been updated.
10-Dec-2007	10	Added *Table 1*.
19-Feb-2008	11	Modified: *Table 1 on page 1*.

Please Read Carefully:

Information in this document is provided solely in connection with ST products. STMicroelectronics NV and its subsidiaries (“ST”) reserve the right to make changes, corrections, modifications or improvements, to this document, and the products and services described herein at any time, without notice.

All ST products are sold pursuant to ST’s terms and conditions of sale.

Purchasers are solely responsible for the choice, selection and use of the ST products and services described herein, and ST assumes no liability whatsoever relating to the choice, selection or use of the ST products and services described herein.

No license, express or implied, by estoppel or otherwise, to any intellectual property rights is granted under this document. If any part of this document refers to any third party products or services it shall not be deemed a license grant by ST for the use of such third party products or services, or any intellectual property contained therein or considered as a warranty covering the use in any manner whatsoever of such third party products or services or any intellectual property contained therein.

UNLESS OTHERWISE SET FORTH IN ST’S TERMS AND CONDITIONS OF SALE ST DISCLAIMS ANY EXPRESS OR IMPLIED WARRANTY WITH RESPECT TO THE USE AND/OR SALE OF ST PRODUCTS INCLUDING WITHOUT LIMITATION IMPLIED WARRANTIES OF MERCHANTABILITY, FITNESS FOR A PARTICULAR PURPOSE (AND THEIR EQUIVALENTS UNDER THE LAWS OF ANY JURISDICTION), OR INFRINGEMENT OF ANY PATENT, COPYRIGHT OR OTHER INTELLECTUAL PROPERTY RIGHT.

UNLESS EXPRESSLY APPROVED IN WRITING BY AN AUTHORIZED ST REPRESENTATIVE, ST PRODUCTS ARE NOT RECOMMENDED, AUTHORIZED OR WARRANTED FOR USE IN MILITARY, AIR CRAFT, SPACE, LIFE SAVING, OR LIFE SUSTAINING APPLICATIONS, NOR IN PRODUCTS OR SYSTEMS WHERE FAILURE OR MALFUNCTION MAY RESULT IN PERSONAL INJURY, DEATH, OR SEVERE PROPERTY OR ENVIRONMENTAL DAMAGE. ST PRODUCTS WHICH ARE NOT SPECIFIED AS "AUTOMOTIVE GRADE" MAY ONLY BE USED IN AUTOMOTIVE APPLICATIONS AT USER’S OWN RISK.

Resale of ST products with provisions different from the statements and/or technical features set forth in this document shall immediately void any warranty granted by ST for the ST product or service described herein and shall not create or extend in any manner whatsoever, any liability of ST.

ST and the ST logo are trademarks or registered trademarks of ST in various countries.

Information in this document supersedes and replaces all information previously supplied.

The ST logo is a registered trademark of STMicroelectronics. All other names are the property of their respective owners.

© 2008 STMicroelectronics - All rights reserved

STMicroelectronics group of companies

Australia - Belgium - Brazil - Canada - China - Czech Republic - Finland - France - Germany - Hong Kong - India - Israel - Italy - Japan - Malaysia - Malta - Morocco - Singapore - Spain - Sweden - Switzerland - United Kingdom - United States of America

www.st.com