Laser diode
L8231/L7551 series

Receptacle type, 1.3 µm, 1.25, 2.5 Gbps

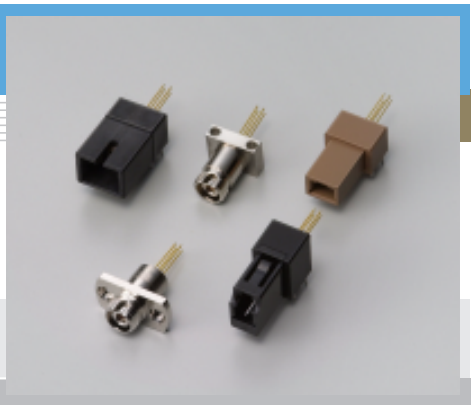

L8231 and L7551 series are high-speed infrared emitters specifically developed for 1.3 µm band optical fiber communications. These devices incorporate a high-speed Fabry-Perot laser diode integrated in a receptacle module. Packages are available with various connectors and mounting styles.

Features

- High-speed Fabry-Perot laser diode
  L8231 series: 1.25 Gbps
  L7551 series: 2.5 Gbps
- Compatible with single/multi mode optical fibers

Applications

- Optical fiber communications
- Fiber channel
- Gigabit ethernet
- HDTV
- SDH

■ Absolute maximum ratings (Ta=25 °C)

Parameter	Symbol	L8231 series	L7551 series	Unit
Forward current	IF	Ith + 14 (DC)	Ith + 16 (DC)	mA
		Ith + 28 (pulse) *1	Ith + 32 (pulse) *1	mA
Reverse voltage (laserdiode)	VR	2		V
Reverse voltage (photodiode)	VRm	20		V
Operating temperature	Topr	-20 to +70		°C
Storage temperature	Tstg	-40 to +70		°C

*1: Duty ratio 50 %

■ Electrical and optical characteristics (Typ. Ta=25 °C, IF=Ith +10 mA)

Parameter	Symbol	L8231 series	L7551 series	Unit
Peak wavelength	λp	1.31	1.31	µm
Forward voltage	VF	1.1	1.1	V
Threshold current	Ith	6	9	mA
Fiber end output *2	PF	0.2	0.2	mW
Rise time	tr	250	200	ps
Data rate	B	1.25	2.5	Gbps
Monitor current (photodiode)	Im	0.4	0.5	mA

*2: Measured using a single-mode optical fiber (mode field diameter 9.5 µm) with a master plug.

■ Package lineup

Parameter	L8231/L7551				
	-21	-22	-23	-32	-44
Mounting style	Board			Panel	Board & panel
Connector	SC	FC	MU	FC	LC
Dimensional outline	①	②	③	④	⑤

SOLID STATE DIVISION

■ Dimensional outlines (unit: mm, tolerance unless otherwise noted: ±0.2)

① L8231/L7551-21

	L8231-21	L7551-21
a	(16)	(10)
b	22.5 ± 0.4	21.2 ± 0.4
c	2.75	1.45

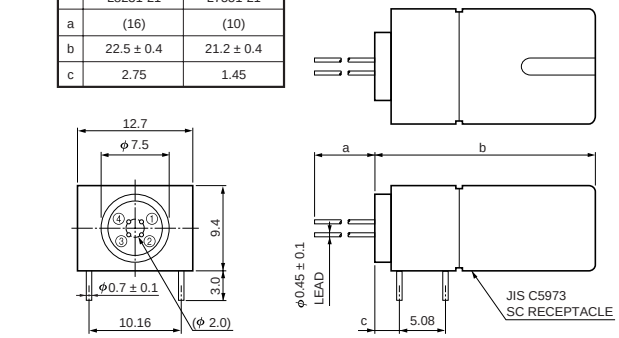

KLEDA0034EB

② L8231/L7551-22

	L8231-22	L7551-22
a	(16)	(10)
b	2.8 ± 0.1	1.75 ± 0.1
c	(4.8)	(3.5)
d	16.35 ± 0.3	15.05 ± 0.3

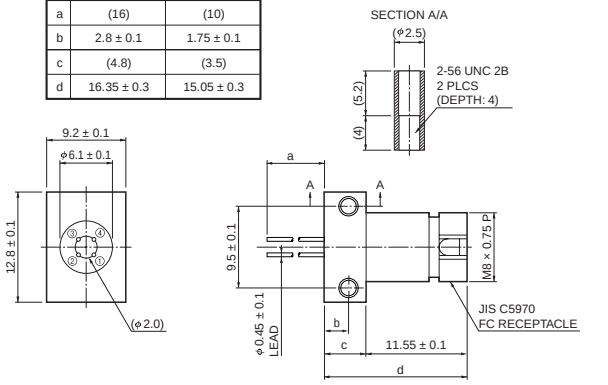

KLEDA0035EB

③ L8231/L7551-23

	L8231-23	L7551-23
a	(16)	(10)
b	1.3	0

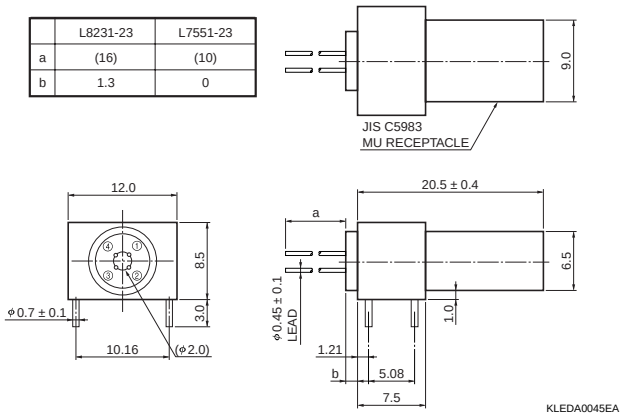

KLEDA0045EA

④ L8231/L7551-32

	L8231-32	L7551-32
a	(16)	(10)
b	8.8	7.5

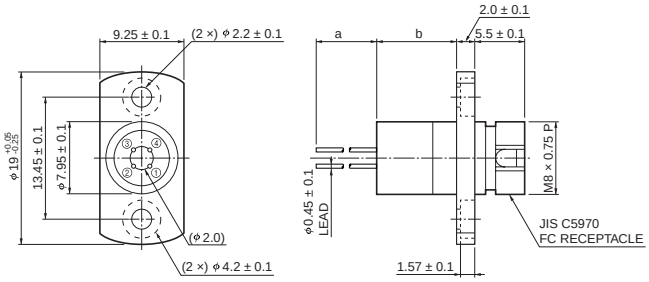

KLEDA0036EB

⑤ L8231/L7551-44

	L8231-44	L7551-44
a	(16)	(10)
b	1.3	0

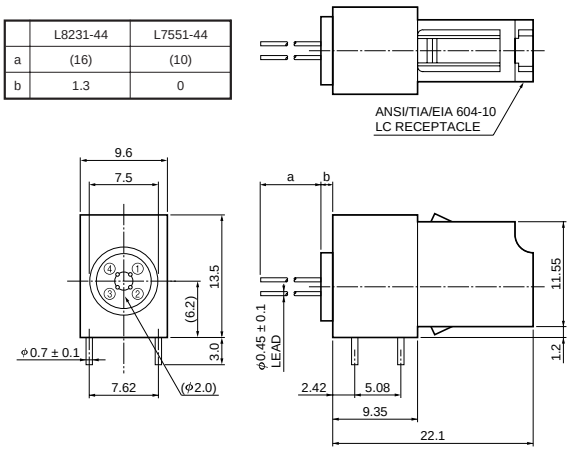

KLEDA0046EB

■ Pin connection

Pin No.	L8231 series	L7551 series
①	Anode (PD)	Cathode (PD)
②	Anode (LD)	Cathode (LD)
③	Cathode (LD)	Anode (LD)
④	Cathode (PD)	Anode (PD)

HAMAMATSU
Information furnished by HAMAMATSU is believed to be reliable. However, no responsibility is assumed for possible inaccuracies or omissions.
Specifications are subject to change without notice. No patent rights are granted to any of the circuits described herein. ©2002 Hamamatsu Photonics K.K.

HAMAMATSU PHOTONICS K.K., Solid State Division
1126-1 Ichino-cho, Hamamatsu City, 435-8558 Japan, Telephone: (81) 053-434-3311, Fax: (81) 053-434-5184, http://www.hamamatsu.com
U.S.A.: Hamamatsu Corporation: 360 Foothill Road, P.O.Box 6910, Bridgewater, N.J. 08807-0910, U.S.A., Telephone: (1) 908-231-0960, Fax: (1) 908-231-1218
Germany: Hamamatsu Photonics Deutschland GmbH: Arzbergerstr. 10, D-82211 Herrsching am Ammersee, Germany, Telephone: (49) 08152-3750, Fax: (49) 08152-2658
France: Hamamatsu Photonics France S.A.R.L.: 8, Rue du Saule Trapu, Parc du Moulin de Massy, 91882 Massy Cedex, France, Telephone: 33-(1) 69 53 71 00, Fax: 33-(1) 69 53 71 10
United Kingdom: Hamamatsu Photonics UK Limited: 2 Howard Court, 10 Tewin Road, Welwyn Garden City, Hertfordshire AL7 1BW, United Kingdom, Telephone: (44) 1707-294888, Fax: (44) 1707-325777
North Europe: Hamamatsu Photonics Norden AB: Smidesvägen 12, SE-171 41 Solna, Sweden, Telephone: (46) 8-509-031-00, Fax: (46) 8-509-031-01
Italy: Hamamatsu Photonics Italia S.R.L.: Strada della Moia, 1/E, 20020 Arese, (Milano), Italy, Telephone: (39) 02-935-81-733, Fax: (39) 02-935-81-741

Cat. No. KLED1018E04
Jan. 2002 DN