Belling Lee

L675 PANEL FUSEHOLDER BARRIER & PANEL SEALED



Design facilitates use for size 00 fuse links. This is a rugged fuseholder and was specially designed for Services use with heavy duty (high rupturing capacity) fuse links. It is not suitable for use with Glass cartridge fuse links

CURRENT RATING:	**2A (temperature rise to ≤40°C)**
TEMPERATURE RANGE:	**-55°C to +70°C (ambient)**
BREAKDOWN VOLTAGE:	**9kV (sea level)**
INSERTION RESISTANCE	**5 milliohms (average)**
INSULATION RESISTANCE	**≥100 megohms**
PANEL THICKNESS (MAX):	**3.8mm**
FIXING TORQUE:	**0.62 Nm**
HUMIDITY:	**H5**
MATERIAL:	**Moulding, phenolic**
WEIGHT:	**13.7g**
APPROVALS:	**Conforms to DEF 59-100**

ORDERING REFERENCE: L675

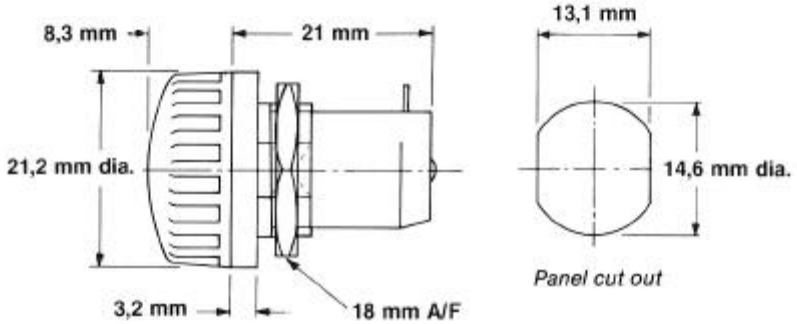

Dialight BLP reserve the right to change without prior notice the information contained within this leaflet

Dialight BLP Ltd., Exning Road, Newmarket, Suffolk, CB8 0AX, England
Tel: +44 (0)1638 665161 Fax: +44 (0)1638 660718 email: sales@blpcomp.com http://www.blpcomp.com

A subsidiary of Dialight plc